This is a digital copy of a book that was preserved for generations on library shelves before it was carefully scanned by Google as part of a project to make the world's books discoverable online.

It has survived long enough for the copyright to expire and the book to enter the public domain. A public domain book is one that was never subject to copyright or whose legal copyright term has expired. Whether a book is in the public domain may vary country to country. Public domain books are our gateways to the past, representing a wealth of history, culture and knowledge that's often difficult to discover.

Marks, notations and other marginalia present in the original volume will appear in this file - a reminder of this book's long journey from the publisher to a library and finally to you.

Usage guidelines

Google is proud to partner with libraries to digitize public domain materials and make them widely accessible. Public domain books belong to the public and we are merely their custodians. Nevertheless, this work is expensive, so in order to keep providing this resource, we have taken steps to prevent abuse by commercial parties, including placing technical restrictions on automated querying.

We also ask that you:

+ *Make non-commercial use of the files* We designed Google Book Search for use by individuals, and we request that you use these files for personal, non-commercial purposes.

+ *Refrain from automated querying* Do not send automated queries of any sort to Google's system: If you are conducting research on machine translation, optical character recognition or other areas where access to a large amount of text is helpful, please contact us. We encourage the use of public domain materials for these purposes and may be able to help.

+ *Maintain attribution* The Google "watermark" you see on each file is essential for informing people about this project and helping them find additional materials through Google Book Search. Please do not remove it.

+ *Keep it legal* Whatever your use, remember that you are responsible for ensuring that what you are doing is legal. Do not assume that just because we believe a book is in the public domain for users in the United States, that the work is also in the public domain for users in other countries. Whether a book is still in copyright varies from country to country, and we can't offer guidance on whether any specific use of any specific book is allowed. Please do not assume that a book's appearance in Google Book Search means it can be used in any manner anywhere in the world. Copyright infringement liability can be quite severe.

About Google Book Search

Google's mission is to organize the world's information and to make it universally accessible and useful. Google Book Search helps readers discover the world's books while helping authors and publishers reach new audiences. You can search through the full text of this book on the web at `http://books.google.com/`

Educ T 129.02877

HARVARD
COLLEGE
LIBRARY
THE GIFT OF
Miss Ellen Lang Wentworth
of Exeter, New Hampshire

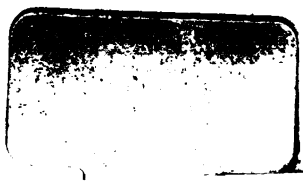

3 2044 097 013 197

Corrections

Pages 120, 121

o A

HIGHER ALGEBRA.

BY

G. A. WENTWORTH, A.M.,

AUTHOR OF A SERIES OF TEXT-BOOKS IN MATHEMATICS.

TEACHERS' EDITION.

BOSTON, U.S.A.:
PUBLISHED BY GINN & COMPANY.
1902.

Educ T 129.02.877

HARVARD COLLEGE LIBRARY
GIFT OF
MISS ELLEN L. WENTWORTH

MAY 8 1939

Entered according to Act of Congress, in the year 1891, by
G. A. WENTWORTH,
in the Office of the Librarian of Congress, at Washington.

ALL RIGHTS RESERVED.

TYPOGRAPHY BY J. S. CUSHING & CO., BOSTON, U.S.A.

PRESSWORK BY GINN & CO., BOSTON, U.S.A.

PREFACE.

THIS edition is intended for teachers, *and for them only*. The publishers will under no circumstances sell the book except to teachers of Wentworth's Algebra; and every teacher must consider himself in honor bound not to leave his copy where pupils can have access to it, and not to sell his copy except to the publishers, Messrs. Ginn & Company.

It is hoped that young teachers will derive great advantage from studying the systematic arrangement of the work, and that all teachers who are pressed for time will find great relief by not being obliged to work out every problem in the Algebra.

G. A. WENTWORTH.

ALGEBRA.

Exercise 1.

When $a=1$, $b=2$, $c=3$, $d=4$, $e=5$, $f=0$:

1. $9a+2b+3c-2f$
$=9+4+9-0$
$=22.$

2. $4e-3a-3b+5c$
$=20-3-6+15$
$=26.$

3. $8abc-bcd+9cde-def$
$=48-24+540-0$
$=564.$

4. $\frac{4ac}{b}+\frac{8bc}{d}-\frac{5cd}{e}$
$=6+12-12$
$=6.$

5. $7e+bcd-\frac{3bde}{2ac}$
$=35+24-20$
$=39.$

6. $abc^2+bcd^2-dea^2+f^3$
$=18+96-20+0$
$=94.$

7. $c^4+6c^2b^2+b^4-4c^3b-4cb^3$
$=625+600+16-1000-160$
$=81.$

8. $\frac{8a^2+3b^2}{a^2b^2}+\frac{4c^2+6b^2}{c^2-b^2}-\frac{c^2+d^2}{e^2}$
$=\frac{8+12}{4}+\frac{36+24}{5}-\frac{c^2+16}{25}$
$=5+12-$
$=16.$

9. $\frac{d^2}{b^2}$
$=\frac{4^2}{2^2}$
$=2.$

10. $\frac{c^3+b^3}{c^3-b^3}$
$=\frac{5^3+2}{3^3-2^3}$
$=\frac{125+2}{9-8}$
$=127.$

11. $\frac{b^3+d^3}{b^2+d^2-bd}$
$=\frac{2^3+4^3}{2^2+4^2-8}$
$=\frac{8+64}{4+16-8}$
$=6.$

12. $\frac{e^3-d^3}{e^2+ed+d^2}$
$=\frac{5^3-4^3}{5^2+20+4^2}$
$=\frac{125-64}{25+20+16}$
$=1.$

13. $100+80\div 4$
$=100+20$
$=120.$

14. $75 - 25 \times 2$
$= 75 - 50$
$= 25.$

15. $25 + 5 \times 4 - 10 \div 5$
$= 25 + 20 - 2$
$= 43.$

16. $24 - 5 \times 4 \div 10 + 3$
$= 24 - 20 \div 10 + 3$
$= 24 - 2 + 3$
$= 25.$

17. $(24 - 5) \times (4 \div 10 + 3)$
$= 19 \times (\frac{2}{5} + 3)$
$= 19 \times \frac{17}{5}$
$= \frac{323}{5}$
$= 64\frac{3}{5}.$

18. $xy + 4a \times 2$
$= 15 + 16$
$= 31.$

19. $xy - 15b \div 5$
$= 15 - \frac{150}{5}$
$= 15 - 30$
$= -15.$

20. $3x + 7y \div 7 + a \times y$
$= 9 + 35 \div 7 + 2 \times 5$
$= 9 + 5 + 10$
$= 24.$

21. $6b - 8y \div 2y \times b - 2b$
$= 60 - 40 \div 100 - 20$
$= 60 - \frac{2}{5} - 20$
$= 39\frac{3}{5}.$

22. $(6b - 8y) \div 2y \times b + 2b$
$= (60 - 40) \div 10 \times 10 + 20$
$= 20 \div 100 + 20$
$= 20\frac{1}{5}.$

23. $6b - (8y \div 2y) \times b - 2b$
$= 60 - (40 \div 10) \times 10 - 20$
$= 60 - 40 - 20$
$= 0.$

24. $6b \div (b - y) - 3x + bxy \div 10a$
$= 60 \div (10 - 5) - 9 + 150 \div 20$
$= 12 - 9 + 7\frac{1}{2}$
$= 10\frac{1}{2}.$

EXERCISE 2.

1. Express the sum of a and b. $a + b$.

2. Express the double of x. $2x$.

3. By how much is a greater than 5? $a - 5$.

4. If x be a whole number, find the next number above it.

$x + 1$.

5. Write five numbers in order of magnitude, so that x shall be the middle number.

$x - 2,\ x - 1,\ x,\ x + 1,\ x + 2.$

6. What is the sum of $x + x + x +$ ..... written a times?

ax.

7. If the product is xy and the multiplier x, what is the multiplicand?

$xy \div x = y$.

8. A man who has a dollars spends b dollars; how many dollars has he left?

$$a - b.$$

9. A regiment of men can be drawn up in a ranks of b men each, and there are c men over; of how many men does the regiment consist?

$$ab + c.$$

10. Write, the sum of x and y divided by c is equal to the product of a, b, and m, minus six times c, and plus the quotient of a divided by the sum of x and y.

$$\frac{x+y}{c} = abm - 6c + \frac{a}{x+y}.$$

11. Write, six times the square of n, divided by m minus a, plus five b into the expression c plus d minus a.

$$\frac{6n^2}{m-a} + 5b(c+d-a).$$

12. Write, four times the fourth power of a, diminished by five times the square of a into the square of b, and increased by three times the fourth power of b.

$$4a^4 - 5a^2b^2 + 3b^4.$$

EXERCISE 3.

1. $+16 + (-11)$
$= 16 - 11$
$= 5.$

2. $-15 + (-25)$
$= -15 - 25$
$= -40.$

3. $+68 + (-79)$
$= 68 - 79$
$= -11.$

4. $-7 + (+4)$
$= -7 + 4$
$= -3.$

5. $+33 + (+18)$
$= 33 + 18$
$= 51.$

6. $+378 + (+709) + (-592)$
$= 378 + 709 - 592$
$= 495.$

7. A man has \$5242 and owes \$2758. How much is he worth?

$$\$5242 + (-\$2758) = \$5242 - \$2758 = \$2484.$$

8. The First Punic War began B.C. 264, and lasted 23 years. When did it end?

$$-264 + (+23) = -264 + 23 = -241;$$ *i.e.* 241 B.C.

9. Augustus Cæsar was born B.C. 63, and lived 77 years. When did he die?

$$-63+(+77)=+14;\ \textit{i.e.}\ 14\ \text{A.D.}$$

10. A man goes 65 steps forward, then 37 steps backward, then again 48 steps forward. How many steps did he take in all? How many steps is he from where he started?

$$65+37+48=150. \qquad 65-37+48=76.$$

Exercise 4.

1. $5ab+(-5ab)$
$=5ab-5ab$
$=0.$

2. $8mx+(-2mx)$
$=8mx-2mx$
$=6mx.$

3. $-13mng+(-7mng)$
$=-13mng-7mng$
$=-20mng.$

4. $-5x^2+(+8x^2)$
$=-5x^2+8x^2$
$=3x^2.$

5. $25my^2+(-18my^2)$
$=25my^2-18my^2$
$=7my^2.$

6. $7ab+(-5ab)$
$=7ab-5ab$
$=2ab.$

7. $120my+(-95my)$
$=120my-95my$
$=25my.$

8. $-33ab^2+(11ab^2)$
$=-33ab^2+11ab^2$
$=-22ab^2.$

9. $-75xy+(+20xy)$
$=-75xy+20xy$
$=-55xy.$

10. $+15a^2x^2+(-a^2x^2)$
$=15a^2x^2-a^2x^2$
$=14a^2x^2.$

11. $5a+(-3b)+(+4a)+(-7b)$
$=5a-3b+4a-7b$
$=9a-10b.$

12. $4a^2c+(-10xyz)+(+6a^2c)+(-9xyz)+(-11a^2c)+(+20xyz)$
$=4a^2c-10xyz+6a^2c-9xyz-11a^2c+20xyz$
$=-a^2c+xyz.$

13. $3x^2y+(-4ab)+(-2mn)+(+5x^2y)+(-x^2y)+(-4x^2y)$
$=3x^2y-4ab-2mn+5x^2y-x^2y-4x^2y$
$=3x^2y-4ab-2mn.$

Exercise 5.

1.
$5a+3b+c$
$3a+3b+3c$
$a+3b+5c$
$9a+9b+9c$

2.
$7a-4b+c$
$6a+3b-5c$
$-12a\qquad+4c$
$a-b$

3.
$$\begin{array}{r} a+b-c \\ -a+b+c \\ a-b+c \\ a+b-c \\ \hline 2a+2b \end{array}$$

4.
$$\begin{array}{r} a+2b+3c \\ 2a-b-2c \\ -a+b-c \\ -a-b+c \\ \hline a+b+c \end{array}$$

5.
$$\begin{array}{r} a-2b+3c+4d \\ -2a+3b-4c+5d \\ +3a-4b+5c-6d \\ -4a+5b-4c+7d \\ \hline -2a+2b \quad +10d \end{array}$$

6.
$$\begin{array}{r} x^3-4x^2+5x-3 \\ 2x^3-14x^2-14x+5 \\ -x^3+9x^2+x+8 \\ \hline 2x^3-9x^2-8x+10 \end{array}$$

7.
$$\begin{array}{r} x^4-2x^3+3x^2 \\ x^3+x^2+x \\ 4x^4+5x^3 \\ +2x^2+3x-4 \\ -3x^2-2x-5 \\ \hline 5x^4+4x^3+3x^2+2x-9 \end{array}$$

8.
$$\begin{array}{r} a^3+3ab^2-3a^2b-b^3 \\ 2a^3-6ab^2+5a^2b-7b^3 \\ a^3-ab^2+2b^3 \\ \hline 4a^3-4ab^2+2a^2b+b^3-7b^3 \end{array}$$

9.
$$\begin{array}{r} 2ab+2a^2x-3ax^2 \\ 12ab-6a^2x+10ax^2 \\ -8ab-5a^2x+ax^2 \\ \hline 6ab-9a^2x+7ax^2+ax^2 \end{array}$$

10.
$$\begin{array}{r} c^4-3c^3+2c^2-4c+7 \\ 2c^4+3c^3+2c^2+5c+6 \\ -4c^4-c^3-5 \\ \hline -c^4+c+8 \end{array}$$

11.
$$\begin{array}{r} 3x^2-xy+xz-3y^2+4yz-z^2 \\ -5x^2-xy-xz+5yz \\ 6x^2-6y-6z \\ 4yz \\ -5yz+3z^2 \\ -4x^2+y^2+3yz+3z^2 \\ \hline -2xy-2y^2+11yz+5z^2-6y-6z \end{array}$$

12.
$$\begin{array}{r} m^5-3m^4n-6m^3n^2 \\ -5m^4n+m^3n^2+m^2n^3 \\ +7m^3n^2+4m^2n^3-3mn^4 \\ -2m^2n^3-3mn^4+4n^5 \\ 3m^5+2mn^4+2n^5 \\ 2m^5+7m^4n-n^5 \\ \hline 6m^5-m^4n+2m^3n^2+3m^2n^3-4mn^4+5n^5 \end{array}$$

Exercise 6.

1. $+25-(+16)$
$=25-16$
$=9.$

2. $-50-(-25)$
$=-50+25$
$=-25.$

3. $-31-(+58)$
$=-31-58$
$=-89.$

4. $+107-(-93)$
$=107+93$
$=200.$

5. Rome was ruled by emperors from B.C. 30 to its fall, A.D. 476. How long did the empire last?

$$476 - (-30) = 476 + 30 = 506;\ i.e.\ 506 \text{ years.}$$

6. The continent of Europe lies between 36° and 71° north latitude, and between 12° west and 63° east longitude (from Paris). How many degrees does it extend in latitude, and how many in longitude?

$$71 - (+36) = 71 - 36 = 35.$$
$$12 - (-63) = 12 + 63 = 75.$$

Exercise 7.

1. $5x - (-4x)$
$= 5x + 4x$
$= 9x.$

2. $-3ab - (+5ab)$
$= -3ab - 5ab$
$= -8ab.$

3. $3ab^2 - (+10ab^2)$
$= 3ab^2 - 10ab^2$
$= -7ab^2.$

4. $15m^2x^2 - (-7m^2x^2)$
$= 15m^2x^2 + 7m^2x^2$
$= 22m^2x^2.$

5. $-7ay - (-3ay)$
$= -7ay + 3ay$
$= -4ay.$

6. $17ax^3 - (-24ax^3)$
$= 17ax^3 + 24ax^3$
$= 41ax^3.$

7. $5a^2x - (-3a^2x)$
$= 5a^2x + 3a^2x$
$= 8a^2x.$

8. $-4xy - (-5xy)$
$= -4xy + 5xy$
$= xy.$

9. $8ax - (-3ay)$
$= 8ax + 3ay.$

10. $2ab^2y - (+aby)$
$= 2ab^2y - aby.$

11. $9x^2 + (5x^2) - (+8x^2)$
$= 9x^2 + 5x^2 - 8x^2$
$= 6x^2.$

12. $5x^2y - (-18x^2y) + (-10x^2y)$
$= 5x^2y + 18x^2y - 10x^2y$
$= 13x^2y.$

13. $17ax^3 - (-ax^3) - (+24ax^3)$
$= 17ax^3 + ax^3 - 24ax^3$
$= -6ax^3.$

14. $-3ab + (+2mx) - (-4mx)$
$= -3ab + 2mx + 4mx$
$= -3ab + 6mx.$

15. $3a - (+2b) - (-4c)$
$= 3a - 2b + 4c.$

Exercise 8.

1. $6a - 2b - c$
$2a - 2b - 3c$
$4a \qquad + 2c$

2. $3a - 2b + 3c$
$2a - 8b - c$
$a + 6b + 4c$

3. $7x^2-8x-1$
$5x^2-6x+3$
$2x^2-2x-4$

4. $4x^4-3x^3-2x^3-7x+9$
$x^4-2x^3-2x^2+7x-9$
$3x^4-x^3-14x+18$

5. $2x^2-2ax+3a^2$
x^2-ax+a^2
$x^2-ax+2a^2$

6. $x^2-3xy-y^2+yz-2z^2$
$x^2+2xy-3y^2-2z^2+5xz$
$-5xy+2y^2+yz-5xz$

7. $a^3-3a^2b+3ab^2-b^3$
$-a^3+3a^2b-3ab^2+b^3$
$2a^3-6a^2b+6ab^2-2b^3$

8. $x^2-5xy+xz-y^2+7yz+2z^2$
$x^2-xy-xz+2yz+3z^2$
$-4xy+2xz-y^2+5yz-z^2$

9. $2ax^2+3abx-4b^2x+12b^3$
$ax^2-4abx-5b^2x+bx^2-x^3$
$ax^2+7abx+b^2x+12b^3-bx^2+x^3$

10. $6x^3-7x^2y+4xy^2-2y^3-5x^2+xy-4y^2+2$
$8x^3-7x^2y+xy^2-y^3+9x^2-xy+6y^2-4$
$-2x^3+3xy^2-y^3-14x^2+2xy-10y^2+6$

11. a^4-b^4
$+4a^3b-6a^2b^2+4ab^3$
$a^4-b^4-4a^3b+6a^2b^2-4ab^3$
$2a^4-2b^4-4a^3b+6a^2b^2+4ab^3$
$-a^4+b^4-8ab^3$

12. $x^3y^2-3x^2y^3+4xy^4-y^5$
$-4xy^4-4y^5-x^5+2x^4y$
$x^3y^2-3x^2y^3+8xy^4+3y^5+x^5-2x^4y$

$x^3y^2-3x^2y^3+4xy^4-y^5$
$-4xy^4-4y^5-x^5+2x^4y$
$x^3y^2-3x^2y^3-5y^5-x^5+2x^4y$
$x^3y^2-3x^2y^3+8xy^4+3y^5+x^5-2x^4y$
$-8xy^4-8y^5-2x^5+4x^4y$

13. $a^2b^2-a^2bc-8ab^2c-a^2c^2+abc^2-6b^2c^2$
$+2a^2bc-5ab^2c+2abc^2-5b^2c^2$
$a^2b^2-3a^2bc-3ab^2c-a^2c^2-abc^2-b^2c^2$

14. $12a+3b-5c-2d=69$
$10a-b+4c-3d=45$
$2a+4b-9c+d=24$

15. $b-a.$
$2a^3-6a^2b+6ab^2-2b^3$
$a^3-7a^2b-3b^3$
$a^3+a^2b+6ab^2+b^3$

16. $2x^2-y^2-2xy+z^2$
$x^2-y^2+2xy-z^2$
$x^2-4xy+2z^2$

17. $12ac+8cd-9$
$-7ac-9cd+8$
$19ac+17cd-17$

18.
$$\begin{array}{r} -6a^2+2ab-3c^2 \\ 4a^2+6ab-4c^2 \\ \hline -10a^2-4ab+c^2 \end{array}$$

19.
$$\begin{array}{r} 9xy-4x-3y+7 \\ 8xy-2x+3y+6 \\ \hline xy-2x-6y+1 \end{array}$$

20.
$$\begin{array}{r} -a^2bc-ab^2c+abc^2-abc \\ a^2bc+ab^2c-abc^2+abc \\ \hline -2a^2bc-2ab^2c+2abc^2-2abc \end{array}$$

21.
$$\begin{array}{r} 7x^2-2x+4 \\ 2x^2+3x-1 \\ \hline 5x^2-5x+5 \end{array}$$

22.
$$\begin{array}{r} 3x^2+2xy-y^2 \\ -x^2-3xy+3y^2 \\ \hline 4x^2+5xy-4y^2 \\ 3x^2+4xy-5y^2 \\ \hline x^2+xy+y^2 \end{array}$$

23.
$$\begin{array}{r} ax^2-by^2 \\ +cx^2-dy^2 \\ \hline ax^2-by^2-cx^2+dy^2 \end{array}$$

24.
$$\begin{array}{r} ax+bx+by+cy \\ ax-bx-by+cy \\ \hline 2bx+2by \end{array}$$

25.
$$\begin{array}{r} 5x^2+4x-4y+3y^2 \\ 5x^2-3x+3y+y^2 \\ \hline 7x-7y+2y^2 \end{array}$$

26.
$$\begin{array}{r} a^2b^2+12abc-9ax^2 \\ 4ab^2-6acx+3a^2x \\ \hline a^2b^2+12abc-9ax^2-4ab^2+6acx-3a^2x \end{array}$$

27.
$$\begin{array}{r} a^2-2ab+c^2-3b^2 \\ 2a^2-2ab+3b^2 \\ \hline -a^2+c^2-6b^2 \end{array}$$

28.
$$\begin{array}{r} a^2+b^2+c^2+d^2 \\ b^2+c^2+d^2 \\ a^2+b^2-c^2-d^2 \\ a^2-b^2+c^2+d^2 \\ \hline 3a^2+2b^2+2c^2+2d^2 \end{array}$$

$$\begin{array}{r} b^2+c^2+d^2 \\ a^2+b^2-c^2-d^2 \\ a^2-b^2+c^2+d^2 \\ -a^2+b^2+c^2+d^2 \\ \hline a^2+2b^2+2c^2+2d^2 \end{array}$$

$$\begin{array}{r} 3a^2+2b^2+2c^2+2d^2 \\ a^2+2b^2+2c^2+2d^2 \\ \hline 2a^2 \end{array}$$

29.
$$\begin{array}{r} 2x^2-2y^2-z^2 \\ 2x^2+3y^2-z^2 \\ \hline -5y^2 \\ -x^2-2y^2+3z^2 \\ \hline x^2-3y^2-3z^2 \end{array}$$

30.
$$\begin{array}{r} -2a^3+a^2c+2ac^2 \\ +a^3-a^2c-ac^2 \\ \hline -a^3+ac^2 \end{array}$$

$$\begin{array}{r} a^3-2a^2c+3ac^2 \\ -a^3+ac^2 \\ \hline 2a^3-2a^2c+2ac^2 \end{array}$$

EXERCISE 9.

1. $(a+b)+(b+c)-(a+c)$
$=a+b+b+c-a-c$
$=2b.$

2. $(2a-b-c)-(a-2b+c)$
$=2a-b-c-a+2b-c$
$=a+b-2c.$

3. $(2x-y)-(2y-z)-(2z-x)$
$=2x-y-2y+z-2z+x$
$=3x-3y-z.$

4. $(a-x-y)-(b-x+y)+(c+2y)$
$=a-x-y-b+x-y+c+2y$
$=a-b+c.$

5. $(2x-y+3z)+(-x-y-4z)-(3x-2y-z)$
$=2x-y+3z-x-y-4z-3x+2y+z$
$=-2x.$

6. $(3a-b+7c)-(2a+3b)-(5b-4c)+(3c-a)$
$=3a-b+7c-2a-3b-5b+4c+3c-a$
$=-9b+14c.$

7. $1-(1-a)+(1-a+a^2)-(1-a+a^2-a^3)$
$=1-1+a+1-a+a^2-1+a-a^2+a^3$
$=a+a^3.$

8. $a-\{2b-(3c+2b)-a\}$
$=a-\{2b-3c-2b-a\}$
$=a-2b+3c+2b+a$
$=2a+3c.$

9. $2a-\{b-(a-2b)\}$
$=2a-\{b-a+2b\}$
$=2a-b+a-2b$
$=3a-3b.$

10. $3a-\{b+(2a-b)-(a-b)\}$
$=3a-\{b+2a-b-a+b\}$
$=3a-b-2a+b+a-b$
$=2a-b.$

11. $7a-[3a-\{4a-(5a-2a)\}]$
$=7a-[3a-\{4a-5a+2a\}]$
$=7a-[3a-4a+5a-2a]$
$=7a-3a+4a-5a+2a$
$=5a.$

12. $2x+(y-3z)-[(3x-2y)+z]+5x-(4y-3z)$
$=2x+y-3z-[3x-2y+z]+5x-4y+3z$
$=2x+y-3z-3x+2y-z+5x-4y+3z$
$=4x-y-z.$

13. $\{(3a-2b)+(4c-a)\}-\{a-(2b-3a)-c\}+\{a-(b-5c-a)\}$
$=\{3a-2b+4c-a\}-\{a-2b+3a-c\}+\{a-b+5c+a\}$
$=3a-2b+4c-a-a+2b-3a+c+a-b+5c+a$
$=-b+10c.$

14. $a-[2a+(3a-4a)]-5a-\{6a-[(7a+8a)-9a]\}$
$=a-[2a+3a-4a]-5a-\{6a-[7a+8a-9a]\}$
$=a-2a-3a+4a-5a-\{6a-7a-8a+9a\}$
$=a-2a-3a+4a-5a-6a+7a+8a-9a$
$=-5a.$

15. $2a-(3b+2c)-[5b-(6c-6b)+5c-\{2a-(c+2b)\}]$
$=2a-3b-2c-[5b-6c+6b+5c-\{2a-c-2b\}]$
$=2a-3b-2c-[5b-6c+6b+5c-2a+c+2b]$
$=2a-3b-2c-5b+6c-6b-5c+2a-c-2b$
$=4a-16b-2c.$

16. $a-[2b+\{3c-3a-(a+b)\}+\{2a-(b+c)\}]$
$=a-[2b+\{3c-3a-a-b\}+\{2a-b-c\}]$
$=a-[2b+3c-3a-a-b+2a-b-c]$
$=a-2b-3c+3a+a+b-2a+b+c$
$=3a-2c.$

17. $16-x-[7x-\{8x-(9x-\overline{3x-6x})\}]$
$=16-x-[7x-\{8x-(9x-3x+6x)\}]$
$=16-x-[7x-\{8x-9x+3x-6x\}]$
$=16-x-[7x-8x+9x-3x+6x]$
$=16-x-7x+8x-9x+3x-6x$
$=16-12x.$

18. $2a-[3b+(2b-c)-4c+\{2a-(3b-\overline{c-2b})\}]$
$=2a-[3b+2b-c-4c+\{2a-(3b-c+2b)\}]$
$=2a-[3b+2b-c-4c+\{2a-3b+c-2b\}]$
$=2a-[3b+2b-c-4c+2a-3b+c-2b]$
$=2a-3b-2b+c+4c-2a+3b-c+2b$
$=4c.$

19. $a-[2b+\{3c-3a-(a+b)\}+2a-(b+3c)]$
$=a-[2b+\{3c-3a-a-b+2a-b-3c\}]$
$=a-[2b+3c-3a-a-b+2a-b-3c]$
$=a-2b-3c+3a+a+b-2a+b+3c$
$=3a.$

20. $a-[5b-\{a-(3c-3b)+2c-(a-2b-c)\}]$
$=a-[5b-\{a-3c+3b+2c-a+2b+c\}]$
$=a-[5b-d+3c-3b-2c+a-2b-c]$
$=a-5b+a-3c+3b+2c-a+2b+c$
$=a.$

Exercise 10.

1. $2a-3b-4c+d+3e-2f$
$=(2a-3b)-(4c-d)+(3e-2f)$
$=(2a-3b-4c)+(d+3e-2f).$

2. $a-2x+4y-3z-2b+c$
$=(a-2x)+(4y-3z)-(2b-c)$
$=(a-2x+4y)-(3z+2b-c)$

3. $a^5+3a^4-2a^3-4a^2+a-1$
$=(a^5+3a^4)-(2a^3+4a^2)+(a-1)$
$=(a^5+3a^4-2a^3)-(4a^2-a+1).$

4. $-3a-2b+2c-5d-e-2f$
$=-(3a+2b)+(2c-5d)-(e+2f)$
$=-(3a+2b-2c)-(5d+e+2f).$

5. $ax-by-cz-bx+cy+az$
$=(ax-by)-(cz+bx)+(cy+az)$
$=(ax-by-cz)-(bx-cy-az).$

6. $2x^5 - 3x^4y + 4x^3y^2 - 5x^2y^3 + xy^4 - 2y^5$
$= (2x^5 - 3x^4y) + (4x^3y^2 - 5x^2y^3) + (xy^4 - 2y^5)$
$= (2x^5 - 3x^4y + 4x^3y^2) - (5x^2y^3 - xy^4 + 2y^5)$.

7.
(1.) $2a - 3b - 4c + d + 3e - 2f = (2a - 3b - 4c) + (d + [3e - 2f])$.
(2.) $a - 2x + 4y - 3z - 2b + c = (a - 2x + 4y) - (3z + [2b - c])$.
(3.) $a^5 + 3a^4 - 2a^3 - 4a^2 + a - 1 = (a^5 + 3a^4 - 2a^3) - (4a^2 - [a - 1])$.
(4.) $-3a - 2b + 2c - 5d - e - 2f = -(3a + 2b - 2c) - (5d + [e + 2f])$.
(5.) $ax - by - cz - bx + cy + az = (ax - by - cz) - (bx - [cy + az])$
(6.) $2x^5 - 3x^4y + 4x^3y^2 - 5x^2y^3 + xy^4 - 2y^5 = (2x^5 - 3x^4y + 4x^3y^2) - (5x^2y^3 - [xy^4 - 2y^5])$

8. $2ax - 6ay + 4bz - 4bx - 2cx - 3cy$
$= (2a - 4b - 2c)x - (6a + 3c)y + 4bz$.

9. $ax - bx + 2ay + 3y + 4az - 3bz - 2z$
$= (a - b)x + (2a + 3)y + (4a - 3b - 2)z$.

10. $ax - 2by + 5cz - 4bx - 3cy + az - 2cx - ay + 4bz$
$= (a - 4b - 2c)x - (a + 2b + 3c)y + (a + 4b + 5c)z$.

11. $12ax + 12ay + 4by - 12bz - 15cx + 6cy + 3cz$
$= (12a - 15c)x + (12a + 4b + 6c)y - (12b - 3c)z$.

12. $2ax - 3by - 7cz - 2bx + 2cx + 8cz - 2cx - cy - cz$
$= (2a - 2b + 2c - 2c)x - (3b + c)y - (7c - 8c + c)z$
$= (2a - 2b)x - (3b + c)y$.

Exercise 11.

1. $-17 \times 8 = -136$.

2. -12.8×25
$= -12.8 \times 100 \div 4 = -320$.

3.
$$\begin{array}{r} 3.29 \\ 5.49 \\ \hline 2961 \\ 1316 \\ 1645 \\ \hline 18.0621 \end{array}$$

4. $-18 \times -5 = +90$.

5. $43 \times -6 = -258$.

6. $457 \times 100 = 45700$.

7. $(-358 - 417) \times -79$
$= -775 \times -79$
$= 61225$.

8. $(7.512 - \{-2.894\}) \times (-6.037 + \{13.963\})$
$= (7.512 + 2.894) \times (-6.037 + 13.963)$
$= 10.406 \times 7.926$
$= 82.477956$.

9. $13\times 8\times -7 = 104\times -7 = -728.$

10.
$$\begin{array}{r} -38 \\ 9 \\ \hline -342 \\ -6 \\ \hline 2052 \end{array}$$

11.
$$\begin{array}{r} -20.9 \\ -1.1 \\ \hline 209 \\ 209 \\ \hline 22.99 \\ 8 \\ \hline 183.92 \end{array}$$

12. $-78.3\times -0.57 = 44.631;$
$1.38\times -27.9 = -38.502;$
$44.631\times -38.502 = -1718.382762.$

13. $-2.906\times -2.076 = 6.032856;$
$6.032586\times -1.49 = -8.98895544;$
$-8.98895544\times 0.89 = -8.0001703416.$

Exercise 12.

1. $6a\times -2a = -12a^2.$

2. $5mn\times 9m = 45m^2n.$

3. $3ax\times -4by = -12abxy.$

4. $-8cm\times dn = -8cdmn.$

5. $-7ab\times 2ac = -14a^2bc.$

6. $5m^2x\times 3mx^2 = 15m^3x^3.$

7. $5a^m\times -2a^n = -10a^{m+n}.$

8. $3a^2x^2\times 7a^3x^4 = 21a^5x^6.$

9. $7a\times -4b = -28ab;$
$-28ab\times -8c = 224abc.$

10. $8ab^2\times 3ac = 24a^2b^2c;$
$24a^2b^2c\times -4c^2 = -96a^2b^2c^3.$

11.
$$\begin{array}{r} 27ab \\ -39mp \\ \hline 243 \\ 81 \\ \hline -1053abmp \\ 18ap \\ \hline 8424 \\ 1053 \\ \hline -18954a^2bmp^2 \end{array}$$

12.
$$\begin{array}{r} 6ab^2y^3 \\ 2b^3y^3 \\ \hline 12ab^5y^6 \\ -5a^2y \\ \hline -60a^3b^5y^7 \end{array}$$

13.
$$\begin{array}{r} 7m^2x \\ 3mx^2 \\ \hline 21m^3x^3 \\ -2mq \\ \hline -42m^4qx^3 \end{array}$$

14.
$$\begin{array}{r} -3pq^2 \\ 6p^3q \\ \hline -18p^4q^3 \\ 8p^2q^3 \\ \hline -144p^6q^6 \end{array}$$

15. $2a^2m^3x^4\times 3am^5x^2 = 6a^3m^8x^6;$
$6a^3m^8x^6\times 4a^3mx^2 = 24a^6m^9x^8.$

16. $6x^3yz^3\times -9x^2y^2z^2 = -54x^5y^3z^5;$
$-54x^5y^3z^5\times 3x^4yz = -162x^9y^4z^6.$

17. $3ax\times 2am\times -4mx\times b^2$
$= -24a^2b^2m^2x^2.$

18. $7am^2\times 3b^2n^2 = 21ab^2m^2n^2;$
$21ab^2m^2n^2\times -4ab = -84a^2b^3m^2n^2;$
$-84a^2b^3m^2n^2\times a^2bn = -84a^4b^4m^2n^3;$
$-84a^4b^4m^2n^3\times -2b^2n = 168a^4b^6m^2n^4;$
$168a^4b^6m^2n^4\times -mn^2 = -168a^4b^6m^3n^6.$

19. $2ab^2\times -5a^2b = -10a^3b^3;$
$-10a^3b^3\times -3ab = 30a^4b^4;$
$30a^4b^4\times 7a = 210a^5b^4.$

Exercise 13.

1 $(4a^2 - 3b) \times 3ab$
$= 12a^3b - 9ab^2.$

2. $(8a^2 - 9ab) \times 3a^2$
$= 24a^4 - 27a^3b.$

3. $(3x^2 - 4y^2 + 5z^2) \times 2x^2y$
$= 6x^4y - 8x^2y^3 + 10x^2yz^2.$

4. $(a^3x - 5a^2x^2 + ax^3 + 2x^4) \times ax^2y$
$= a^4x^3y - 5a^3x^4y + a^2x^5y + 2ax^6y.$

5. $(-9a^5 + 3a^3b^2 - 4a^2b^3 - b^5) \times -3ab^4$
$= 27a^6b^4 - 9a^4b^6 + 12a^3b^7 + 3ab^9.$

6. $(3x^3 - 2x^2y - 7xy^2 + y^3) \times -5x^2y$
$= -15x^5y + 10x^4y^2 + 35x^3y^3 - 5x^2y^4.$

7 $(-4xy^2 + 5x^2y + 8x^3) \times -3x^2y$
$= 12x^3y^3 - 15x^4y^2 - 24x^5y.$

8. $(-3 + 2ab + a^2b^2) \times -a^4$
$= +3a^4 - 2a^5b - a^6b^2.$

9. $(-z - 2xz^2 + 5x^2yz^2 - 6x^3y^3 + 3x^3y^2z) \times -3x^2yz$
$= 3x^3yz^2 + 6x^4yz^3 - 15x^5y^3z^3 + 18x^6y^3z - 9x^6y^2z^2.$

Exercise 14.

1. $x^2 - 4$
$x^2 + 5$
$x^4 - 4x^2$
$+ 5x^2 - 20$
$x^4 + x^2 - 20$

2. $y - 6$
$y + 13$
$y^2 - 6y$
$+ 13y - 78$
$y^2 + 7y - 78$

3. $a^4 + a^2x^2 + x^4$
$a^2 - x^2$
$a^6 + a^4x^2 + a^2x^4$
$- a^4x^2 - a^2x^4 - x^6$
$a^6 - x^6$

4. $x^2 + xy + y^2$
$x - y$
$x^3 + x^2y + xy^2$
$- x^2y - xy^2 - y^3$
$x^3 - y^3$

5. $2x - y$
$x + 2y$
$2x^2 - xy$
$+ 4xy - 2y^2$
$2x^2 + 3xy - 2y^2$

6. $2x^3 + 4x^2 + 8x + 16$
$3x - 6$
$6x^4 + 12x^3 + 24x^2 + 48x$
$- 12x^3 - 24x^2 - 48x - 96$
$6x^4 - 96$

7. $x^3 + x^2 + x - 1$
$x - 1$
$x^4 + x^3 + x^2 - x$
$- x^3 - x^2 - x + 1$
$x^4 - 2x + 1$

8. $x^2 - 3ax$
$x + 3a$
$x^3 - 3ax^2$
$+ 3ax^2 - 9a^2x$
$x^3 - 9a^2x$

9. $13\times 8\times -7 = 104\times -7 = -728.$

11.
$$\begin{array}{r} -20.9 \\ -1.1 \\ \hline 209 \\ 209 \\ \hline 22.99 \\ 8 \\ \hline 183.92 \end{array}$$

12. $-78.3\times -0.57 = 44.631;$
$1.38\times -27.9 = -38.502;$
$44.631\times -38.502 = -1718.382762.$

10.
$$\begin{array}{r} -38 \\ 9 \\ \hline -342 \\ -6 \\ \hline 2052 \end{array}$$

13. $-2.906\times -2.076 = 6.032856;$
$6.032586\times -1.49 = -8.98895544;$
$-8.98895544\times 0.89 = -8.0001703416.$

Exercise 12.

1. $6a\times -2a = -12a^2.$

2. $5mn\times 9m = 45m^2n.$

3. $3ax\times -4by = -12abxy.$

4. $-8cm\times dn = -8cdmn.$

5. $-7ab\times 2ac = -14a^2bc.$

6. $5m^2x\times 3mx^2 = 15m^3x^3.$

7. $5a^m\times -2a^n = -10a^{m+n}.$

8. $3a^2x^2\times 7a^3x^4 = 21a^5x^6.$

9. $7a\times -4b = -28ab;$
$-28ab\times -8c = 224abc.$

10. $8ab^2\times 3ac = 24a^2b^2c;$
$24a^2b^2c\times -4c^2 = -96a^2b^2c^3.$

11.
$$\begin{array}{r} 27ab \\ -39mp \\ \hline 243 \\ 81 \\ \hline -1053abmp \\ 18ap \\ \hline 8424 \\ 1053 \\ \hline -18954a^2bmp^2 \end{array}$$

12.
$$\begin{array}{r} 6ab^2y^3 \\ 2b^3y^3 \\ \hline 12ab^5y^6 \\ -5a^2y \\ \hline -60a^3b^5y^7 \end{array}$$

13.
$$\begin{array}{r} 7m^2x \\ 3mx^2 \\ \hline 21m^3x^3 \\ -2mq \\ \hline -42m^4qx^3 \end{array}$$

14.
$$\begin{array}{r} -3pq^2 \\ 6p^3q \\ \hline -18p^4q^3 \\ 8p^2q^3 \\ \hline -144p^6q^6 \end{array}$$

15. $2a^2m^3x^4\times 3am^5x^2 = 6a^3m^8x^6;$
$6a^3m^8x^6\times 4a^3mx^2 = 24a^6m^9x^8.$

16. $6x^3yz^3\times -9x^2y^2z^2 = -54x^5y^3z^5;$
$-54x^5y^3z^5\times 3x^4yz = -162x^9y^4z^6.$

17. $3ax\times 2am\times -4mx\times b^2$
$= -24a^2b^2m^2x^2.$

18. $7am^2\times 3b^2n^2 = 21ab^2m^2n^2;$
$21ab^2m^2n^2\times -4ab = -84a^2b^3m^2n^2;$
$-84a^2b^3m^2n^2\times a^2bn = -84a^4b^4m^2n^3;$
$-84a^4b^4m^2n^3\times -2b^2n = 168a^4b^6m^2n^4;$
$168a^4b^6m^2n^4\times -mn^2 = -168a^4b^6m^3n^6.$

19. $2ab^2\times -5a^2b = -10a^3b^3;$
$-10a^3b^3\times -3ab = 30a^4b^4;$
$30a^4b^4\times 7a = 210a^5b^4.$

Exercise 13.

1 $(4a^3 - 3b) \times 3ab$
$= 12a^3b - 9ab^2.$

2. $(8a^2 - 9ab) \times 3a^2$
$= 24a^4 - 27a^3b.$

3. $(3x^3 - 4y^2 + 5z^2) \times 2x^2y$
$= 6x^4y - 8x^2y^3 + 10x^2yz^2.$

4. $(a^3x - 5a^2x^2 + ax^3 + 2x^4) \times ax^2y$
$= a^4x^2y - 5a^3x^4y + a^2x^5y + 2ax^6y.$

5. $(-9a^5 + 3a^3b^2 - 4a^2b^3 - b^5) \times -3ab^4$
$= 27a^6b^4 - 9a^4b^6 + 12a^3b^7 + 3ab^9.$

6. $(3x^3 - 2x^2y - 7xy^2 + y^3) \times -5x^2y$
$= -15x^5y + 10x^4y^2 + 35x^3y^3 - 5x^2y^4.$

7 $(-4xy^2 + 5x^2y + 8x^3) \times -3x^2y$
$= 12x^3y^3 - 15x^4y^2 - 24x^5y.$

8. $(-3 + 2ab + a^2b^2) \times -a^4$
$= +3a^4 - 2a^5b - a^6b^2.$

9. $(-z - 2xz^2 + 5x^2yz^2 - 6x^3y^2 + 3x^3y^2z) \times -3x^3yz$
$= 3x^3yz^2 + 6x^4yz^3 - 15x^5y^3z^2 + 18x^5y^3z - 9x^6y^3z^2.$

Exercise 14.

1. $x^2 - 4$
$x^2 + 5$
$x^4 - 4x^2$
$+ 5x^2 - 20$
$x^4 + x^2 - 20$

2. $y - 6$
$y + 13$
$y^2 - 6y$
$+ 13y - 78$
$y^2 + 7y - 78$

3. $a^4 + a^2x^2 + x^4$
$a^2 - x^2$
$a^6 + a^4x^2 + a^2x^4$
$- a^4x^2 - a^2x^4 - x^6$
$a^6 - x^6$

4. $x^2 + xy + y^2$
$x - y$
$x^3 + x^2y + xy^2$
$- x^2y - xy^2 - y^3$
$x^3 - y^3$

5. $2x - y$
$x + 2y$
$2x^2 - xy$
$+ 4xy - 2y^2$
$2x^2 + 3xy - 2y^2$

6. $2x^3 + 4x^2 + 8x + 16$
$3x - 6$
$6x^4 + 12x^3 + 24x^2 + 48x$
$- 12x^3 - 24x^2 - 48x - 96$
$6x^4 - 96$

7. $x^3 + x^2 + x - 1$
$x - 1$
$x^4 + x^3 + x^2 - x$
$- x^3 - x^2 - x + 1$
$x^4 - 2x + 1$

8. $x^3 - 3ax$
$x + 3a$
$x^4 - 3ax^3$
$+ 3ax^3 - 9a^2x$
$x^4 - 9a^2x$

9.
$$\begin{array}{r} 2b^2+3ab-a^2 \\ -5b+7a \\ \hline -10b^3-15ab^2+5a^2b \\ +14ab^2+21a^2b-7a^3 \\ \hline -10b^3-ab^2+26a^2b-7a^3 \end{array}$$

10.
$$\begin{array}{r} 2a+b \\ a+2b \\ \hline 2a^2+ab \\ +4ab+2b^2 \\ \hline 2a^2+5ab+2b^2 \end{array}$$

11.
$$\begin{array}{r} a^2+ab+b^2 \\ a-b \\ \hline a^3+a^2b+ab^2 \\ -a^2b-ab^2-b^3 \\ \hline a^3 \qquad -b^3 \end{array}$$

12.
$$\begin{array}{r} a^2-ab+b^2 \\ a+b \\ \hline a^3-a^2b+ab^2 \\ +a^2b-ab^2+b^3 \\ \hline a^3 \qquad +b^3 \end{array}$$

13.
$$\begin{array}{r} 2ab-5b^2 \\ 3a^2-4ab \\ \hline 6a^3b-15a^2b^2 \\ -8a^2b^2+20ab^3 \\ \hline 6a^3b-23a^2b^2+20ab^3 \end{array}$$

14.
$$\begin{array}{r} -a^3+2a^2b-b^3 \\ 4a^2+8ab \\ \hline -4a^5+8a^4b-4a^2b^3 \\ -8a^4b+16a^3b^2-8ab^4 \\ \hline -4a^5-4a^2b^3+16a^3b^2-8ab^4 \end{array}$$

15.
$$\begin{array}{r} a^2+ab+b^2 \\ a^2-ab+b^2 \\ \hline a^4+a^3b+a^2b^2 \\ +a^3b-a^2b^2-ab^3 \\ +a^2b^2+ab^3+b^4 \\ \hline a^4+a^2b^2+b^4 \end{array}$$

16.
$$\begin{array}{r} a^3-3a^2b+3ab^2-b^3 \\ a^2-2ab+b^2 \\ \hline a^5-3a^4b+3a^3b^2-a^2b^3 \\ -2a^4b+6a^3b^2-6a^2b^3+2ab^4 \\ +a^3b^2-3a^2b^3+3ab^4-b^5 \\ \hline a^5-5a^4b+10a^3b^2-10a^2b^3+5ab^4-b^5 \end{array}$$

17.
$$\begin{array}{r} x+2y-3z \\ x-2y+3z \\ \hline x^2+2xy-3xz \\ -2xy-4y^2+6yz \\ +3xz+6yz-9z^2 \\ \hline x^2-4y^2+12yz-9z^2 \end{array}$$

18. $2x^2 + 3xy + 4y^2$
$3x^2 - 4xy + yz$

$6x^4 + 9x^3y + 12x^2y^2$
$\quad - 8x^3y - 12x^2y^2 - 16xy^3$
$\quad\quad + 2x^2yz + 3xy^2z + 4y^3z$

$6x^4 + x^3y - 16xy^3 + 2x^2yz + 3xy^2z + 4y^3z$

19. $x^2 + xy + y^2$
$x^2 + xz + z^2$

$x^4 + x^3y + x^2y^2$
$\quad + x^3z + x^2yz + xy^2z$
$\quad\quad + x^2z^2 + xyz^2 + y^2z^2$

$x^4 + x^3y + x^2y^2 + x^3z + x^2yz + xy^2z + x^2z^2 + xyz^2 + y^2z^2$

20. $a^2 + b^2 + c^2 - ab - ac - bc$
$a + b + c$

$a^3 + ab^2 + ac^2 - a^2b - a^2c - abc$
$\quad - ab^2 + a^2b - abc + b^3 + bc^2 - b^2c$
$\quad\quad - ac^2 + a^2c - abc - bc^2 + b^2c + c^3$

$a^3 - 3abc + b^3 + c^3$

21. $x^2 - xy + y^2 + x + y + 1$
$x + y - 1$

$x^3 - x^2y + xy^2 + x^2 + xy + x$
$\quad + x^2y - xy^2 + xy + y^3 + y^2 + y$
$\quad\quad - x^2 + xy - x - y^2 - y - 1$

$x^3 + 3xy + y^3 - 1$

22. $x^3 + 4x^2 + 5x - 24$
$x^2 - 4x + 11$

$x^5 + 4x^4 + 5x^3 - 24x^2$
$\quad - 4x^4 - 16x^3 - 20x^2 + 96x$
$\quad\quad + 11x^3 + 44x^2 + 55x - 264$

$x^5 + 151x - 264$

23. $x^3 - 4x^2 + 11x - 24$
$x^2 + 4x + 5$

$x^5 - 4x^4 + 11x^3 - 24x^2$
$\quad + 4x^4 - 16x^3 + 44x^2 - 96x$
$\quad\quad + 5x^3 - 20x^2 + 55x - 120$

$x^5 - 41x - 120$

24. $x^4 + 2x^3 + x^2 - 4x - 11$
$x^2 - 2x + 3$

$x^6 + 2x^5 + x^4 - 4x^3 - 11x^2$
$\quad - 2x^5 - 4x^4 - 2x^3 + 8x^2 + 22x$
$\quad\quad + 3x^4 + 6x^3 + 3x^2 - 12x - 33$

$x^6 + 10x - 33$

25. $x^5 - 5x^4 + 13x^3 - x^2 - x$
$x^2 - 2x - 2$

$x^7 - 5x^6 + 13x^5 - x^4 - x^3$
$-2x^6 + 10x^5 - 26x^4 + 2x^3 + 2x^2$
$-2x^5 + 10x^4 - 26x^3 + 2x^2 + 2x$

$x^7 - 7x^6 + 21x^5 - 17x^4 - 25x^3 + 4x^2 + 2x$

26. $x^3 - 2x^2 + 3x - 4$
$4x^3 + 3x^2 + 2x + 1$

$4x^6 - 8x^5 + 12x^4 - 16x^3$
$+3x^5 - 6x^4 + 9x^3 - 12x^2$
$+2x^4 - 4x^3 + 6x^2 - 8x$
$+x^3 - 2x^2 + 3x - 4$

$4x^6 - 5x^5 + 8x^4 - 10x^3 - 8x^2 - 5x - 4$

27. $5a^4 - 3a^3b + 2a^2b^2 + ab^3$
$5a^3b + 3a^2b^2 - 2ab^3 + b^4$

$25a^7b - 15a^6b^2 + 10a^5b^3 + 5a^4b^4$
$+15a^6b^2 - 9a^5b^3 + 6a^4b^4 + 3a^3b^5$
$-10a^5b^3 + 6a^4b^4 - 4a^3b^5 - 2a^2b^6$
$+5a^4b^4 - 3a^3b^5 + 2a^2b^6 + ab^7$

$25a^7b - 9a^5b^3 + 22a^4b^4 - 4a^3b^5 + ab^7$

28. $4a^7y - 8a^5y^2 + 16a^3y^3 - 32ay^4$
$a^6y^2 + 4a^4y^3 + 4a^2y^4$

$4a^{13}y^3 - 8a^{11}y^4 + 16a^9y^5 - 32a^7y^6$
$+16a^{11}y^4 - 32a^9y^5 + 64a^7y^6 - 128a^5y^7$
$+16a^9y^5 - 32a^7y^6 + 64a^5y^7 - 128a^3y^8$

$4a^{13}y^3 + 8a^{11}y^4 - 64a^5y^7 - 128a^3y^8$

29. $3m^3 + 9m^2n + 9mn^2 + 3n^3$
$2m^4n - 6m^3n^2 + 6m^2n^3 - 2mn^4$

$6m^7n + 18m^6n^2 + 18m^5n^3 + 6m^4n^4$
$-18m^6n^2 - 54m^5n^3 - 54m^4n^4 - 18m^3n^5$
$+18m^5n^3 + 54m^4n^4 + 54m^3n^5 + 18m^2n^6$
$-6m^4n^4 - 18m^3n^5 - 18m^2n^6 - 6mn^7$

$6m^7n - 18m^5n^3 + 18m^3n^5 - 6mn^7$

30. $6a^5b + 3a^3b^4 - 2ab^5 + b^6$
$4a^4 - 2ab^3 - 3b^4$

$24a^9b + 12a^6b^4 - 8a^5b^5 + 4a^4b^6$
$-12a^6b^4 - 6a^3b^7 + 4a^2b^8 - 2ab^9$
$-18a^5b^5 - 9a^2b^8 + 6ab^9 - 3b^{10}$

$24a^9b - 26a^5b^5 + 4a^4b^6 - 6a^3b^7 - 5a^2b^8 + 4ab^9 - 3b^{10}$

31.

$$\begin{array}{l}
x - 3 \\
x - 1 \\
\hline
x^2 - 3x \\
\quad - x + 3 \\
\hline
x^2 - 4x + 3 \\
x + 1 \\
\hline
x^3 - 4x^2 + 3x \\
\quad + x^2 - 4x + 3 \\
\hline
x^3 - 3x^2 - x + 3 \\
x + 3 \\
\hline
x^4 - 3x^3 - x^2 + 3x \\
\quad + 3x^3 - 9x^2 - 3x + 9 \\
\hline
x^4 \qquad - 10x^2 \qquad + 9
\end{array}$$

32.

$$\begin{array}{l}
x^2 - x + 1 \\
x^2 + x + 1 \\
\hline
x^4 - x^3 + x^2 \\
\quad + x^3 - x^2 + x \\
\quad\quad + x^2 - x + 1 \\
\hline
x^4 \qquad + x^2 \qquad + 1 \\
x^4 - x^2 + 1 \\
\hline
x^5 + x^6 + x^4 \\
\quad - x^6 - x^4 - x^2 \\
\quad\quad + x^4 + x^2 + 1 \\
\hline
x^5 \qquad + x^4 \qquad + 1
\end{array}$$

33.

$$\begin{array}{l}
a^2 + ab + b^2 \\
a^2 - ab + b^2 \\
\hline
a^4 + a^3b + a^2b^2 \\
\quad - a^3b - a^2b^2 - ab^3 \\
\quad\quad + a^2b^2 + ab^3 + b^4 \\
\hline
a^4 \qquad + a^2b^2 \qquad + b^4 \\
a^4 - a^2b^2 + b^4 \\
\hline
a^8 + a^6b^2 + a^4b^4 \\
\quad - a^6b^2 - a^4b^4 - a^2b^6 \\
\quad\quad + a^4b^4 + a^2b^6 + b^8 \\
\hline
a^8 \qquad + a^4b^4 \qquad + b^8
\end{array}$$

34.

$$\begin{array}{l}
4a^3 - 4a^2b + ab^2 \\
4a^2 + 3ab + b^2 \\
\hline
16a^5 - 16a^4b + 4a^3b^2 \\
\quad + 12a^4b - 12a^3b^2 + 3a^2b^3 \\
\quad\quad + 4a^3b^2 - 4a^2b^3 + ab^4 \\
\hline
16a^5 - 4a^4b - 4a^3b^2 - a^2b^3 + ab^4 \\
2a^2b + b^3 \\
\hline
32a^7b - 8a^6b^2 - 8a^5b^3 - 2a^4b^4 + 2a^3b^5 - a^2b^6 + ab^7 \\
\quad + 16a^5b^3 - 4a^4b^4 - 4a^3b^5 - a^2b^6 + ab^7 \\
\hline
32a^7b - 8a^6b^2 + 8a^5b^3 - 6a^4b^4 - 2a^3b^5 - a^2b^6 + ab^7
\end{array}$$

35. $x + a$
$x + 2a$

$x^2 + ax$
$+ 2ax + 2a^2$

$x^2 + 3ax + 2a^2$
$x - 3a$

$x^3 + 3ax^2 + 2a^2x$
$- 3ax^2 - 9a^2x - 6a^3$

$x^3 - 7a^2x - 6a^3$
$x - 4a$

$x^4 - 7a^2x^2 - 6a^3x$
$+ 28a^3x - 4ax^3 + 24a^4$

$x^4 - 7a^2x^2 + 22a^3x - 4ax^3 + 24a^4$
$x + 5a$

$x^5 - 7a^2x^3 + 22a^3x^2 - 4ax^4 + 24a^4x$
$- 20a^2x^3 - 35a^3x^2 + 5ax^4 + 110a^4x + 120a^5$

$x^5 - 27a^2x^3 - 13a^3x^2 + ax^4 + 134a^4x + 120a^5$

or $x^5 + ax^4 - 27a^2x^3 - 13a^3x^2 + 134a^4x + 120a^5$

36. $81a^4 - 9a^2b^2 + b^4$
$9a^2 + b^2$

$729a^6 - 81a^4b^2 + 9a^2b^4$
$+ 81a^4b^2 - 9a^2b^4 + b^6$

$729a^6 + b^6$

$27a^3 + b^3$
$27a^3 - b^3$

$729a^6 + 27a^3b^3$
$- 27a^3b^3 - b^6$

$729a^6 - b^6$
$729a^6 + b^6$

$531441a^{12} - 729a^6b^6$
$+ 729a^6b^6 - b^{12}$

$531441a^{12} - b^{12}$

37. $y^2 - yz - 2z^2$
$y^2 + yz - 2z^2$

$y^4 - y^3z - 2y^2z^2$
$+ y^3z - y^2z^2 - 2yz^3$
$- 2y^2z^2 + 2yz^3 + 4z^4$

$y^4 - 5y^2z^2 + 4z^4$

$y^2 - 2yz - z^2$
$y^2 + 2yz - z^2$

$y^4 - 2y^3z - y^2z^2$
$2y^3z - 4y^2z^2 - 2yz^3$
$- y^2z^2 + 2yz^3 + z^4$

$y^4 - 6y^2z^2 + z^4$
$y^4 - 5y^2z^2 + 4z^4$

$- y^2z^2 - 3z^4$

38. $3a^2 - ab - 3b^2$
$a^2b - 2b^2$

$3a^4b - a^3b^2 - 3a^2b^3$
$- 6a^2b^2 + 2ab^3 + 6b^4$

$3a^4b - a^3b^2 - 3a^2b^3 - 6a^2b^2 + 2ab^3 + 6b^4$
$- 2ab^4 - 6b^5$

$3a^4b - a^3b^2 - 3a^2b^3 - 6a^2b^2 + 2ab^3 - 2ab^4 + 6b^4 - 6b^5$

39. $a+b-c$
$a-b+c$

$a^2+ab-ac$
$-ab \quad -b^2+ bc$
$+ac \quad + bc-c^2$

$a^2 \quad -b^2+2bc-c^2$
$-a+b+c$

$-a^3+ab^2-2abc+ac^2$
$+a^2b-b^3 \quad +2b^2c \quad bc^2$
$+a^2c \quad b^2c+2bc^2 \quad c^3$

$-a^3+ab^2-2abc+ac^2+a^2b-b^3+a^2c+ b^2c+ bc^2-c^3$
$a+b+c$

$-a^4+ a^2b^2-2a^2bc+ a^2c^2+a^3b-ab^3+a^2c+ ab^2c+ abc^2-ac^3$
$+ a^2b^2+ a^2bc \quad -a^3b+ab^3 \quad -2ab^2c+ abc^2 \quad - b^4+b^3c+ b^2c^2-bc^3$
$+ a^2bc+ a^2c^2 \quad -a^3c+ ab^2c-2abc^2+ac^3 \quad - b^3c+ b^2c^2-bc^3 \quad c^4$

$-a^4+2a^2b^2 \quad +2a^2c^2 \quad - b^4 \quad +2b^2c^2 \quad - c^4$

40. $a+b$ $\quad$ $c+d$ $\quad$ $a+c$
$b+c$ $\quad$ $a+d$ $\quad$ $b-d$

$ab+b^2$ $\quad$ $ac+ad$ $\quad$ $ab+bc$
$+ac+bc$ $\quad$ $+cd+d^2$ $\quad$ $-ad \quad -cd$

$ab+b^2+ac+bc$ $\quad$ $ac+ad+cd+d^2$ $\quad$ $ab+bc-ad-cd$

$(ab+b^2+ac+bc)-(ac+ad+cd+d^2)-(ab+bc-ad-cd)$
$=ab+b^2+ac+bc-ac-ad-cd-d^2-ab-bc+ad+cd$
$=b^2-d^2.$

41. $a+b+c+d$
$a+b+c+d$

$a^2+ ab+ ac+ ad$
$+ ab \quad + b^2+ bc+ bd$
$+ ac \quad + bc \quad + c^2+ cd$
$+ ad \quad + bd \quad + cd+d^2$

$a^2+2ab+2ac+2ad+b^2+2bc+2bd+c^2+2cd+d^2$

$a-b-c+d$
$a-b-c+d$

$a^2- ab- ac+ ad$
$- ab \quad + b^2+ bc- bd$
$- ac \quad + bc \quad + c^2- cd$
$+ ad \quad - bd \quad - cd+d^2$

$a^2-2ab-2ac+2ad+b^2+2bc-2bd+c^2-2cd+d^2$

$$
\begin{array}{l}
a-b+c-d \\
a-b+c-d \\
\hline
a^2- ab+ ac- ad \\
\quad - ab \quad + b^2- bc+ bd \\
\quad\quad + ac \quad\quad - bc \quad + c^2- cd \\
\quad\quad\quad - ad \quad\quad + bd \quad\quad - cd + d^2 \\
\hline
a^2-2ab+2ac-2ad+b^2-2bc+2bd+c^2-2cd+d^2
\end{array}
$$

$$
\begin{array}{l}
a+b-c-d \\
a+b-c-d \\
\hline
a^2+ ab- ac- ad \\
\quad + ab \quad + b^2- bc- bd \\
\quad\quad - ac \quad\quad - bc \quad + c^2+ cd \\
\quad\quad\quad - ad \quad\quad - bd \quad\quad + cd + d^2 \\
\hline
a^2+2ab-2ac-2ad+b^2-2bc-2bd+c^2+2cd+d^2 \\
a^2+2ab+2ac+2ad+b^2+2bc+2bd+c^2+2cd+d^2 \\
a^2-2ab-2ac+2ad+b^2+2bc-2bd+c^2-2cd+d^2 \\
a^2-2ab+2ac-2ad+b^2-2bc+2bd+c^2-2cd+d^2 \\
\hline
4a^2 \quad\quad + 4b^2 \quad\quad + 4c^2 \quad\quad + 4d^2
\end{array}
$$

42. $(a+b+c)^2-a(b+c-a)-b(a+c-b)-c(a+b-c)$
$= a^2+b^2+c^2+2ab+2ac+2bc-ab-ac+a^2-ab-bc+b^2-ac-bc+c^2$
$= 2a^2+2b^2+2c^2.$

43. $(a-b)x-(b+c)a-\{(b-x)(b-a)-(b-c)(b+c)\}$
$= ax-bx-ab-ac-\{(b^2-bx+ax-ab)-(b^2-c^2)\}$
$= ax-bx-ab-ac-\{b^2-bx+ax-ab-b^2+c^2\}$
$= ax-bx-ab-ac-b^2+bx-ax+ab+b^2-c^2$
$= -ac-c^2.$

44. $(m+n)m-\{(m-n)^2-(n-m)n\}$
$= m^2+mn-\{m^2-2mn+n^2-n^2+mn\}$
$= m^2+mn-m^2+2mn-n^2+n^2-mn$
$= 2mn.$

45. $(a-b+c)^2-\{a(c-a-b)-[b(a+b+c)-c(a-b-c)]\}$
$= a^2-2ab+2ac-2bc+b^2+c^2-\{(ac-a^2-ab)$
$\quad -[(ab+b^2+bc)-(ac-bc-c^2)]\}$
$= a^2-2ab+2ac-2bc+b^2+c^2-\{(ac-a^2-ab)$
$\quad -[ab+b^2+bc-ac+bc+c^2]\}$
$= a^2-2ab+2ac-2bc+b^2+c^2$
$\quad -\{ac-a^2-ab-ab-b^2-2bc+ac-c^2\}$
$= a^2-2ab+2ac-2bc+b^2+c^2-ac+a^2$
$\quad +ab+ab+b^2+2bc-ac+c^2$
$= 2a^2+2b^2+2c^2.$

46. $(p^2+q^2)\,r-(p+q)(p\{r-q\}-q\{r-p\})$
$=p^2r+q^2r-(p+q)(\{pr-pq\}-\{qr-pq\})$
$=p^2r+q^2r-(p+q)(pr-pq-qr+pq)$
$=p^2r+q^2r-(p+q)(pr-qr)$
$=p^2r+q^2r-(p^2r-q^2r)$
$=p^2r+q^2r-p^2r+q^2r$
$=2q^2r.$

47. $(9x^2y^2-4y^4)(x^2-y^2)-\{3xy-2y^2\}\{3x(x^2+y^2)-2y(y^2+3xy-x^2)\}y$
$=9x^4y^2-13x^2y^4+4y^6-\{3xy-2y^2\}\{3x^3+3xy^2-2y^3-6xy^2+2x^2y\}y$
$=9x^4y^2-13x^2y^4+4y^6-\{3xy-2y^2\}\{3x^3y+3xy^3-2y^4-6xy^3+2x^2y^2\}$
$=9x^4y^2-13x^2y^4+4y^6-\{9x^4y^2-13x^2y^4+4y^6\}$
$=9x^4y^2-13x^2y^4+4y^6-9x^4y^2+13x^2y^4-4y^6$
$=0.$

48. $a^2-\{2ab-[-(a+\{b-c\})(a-\{b-c\})+2ab]-4bc\}-(b+c)^2$
$=a^2-\{2ab-[-(a+b-c)(a-b+c)+2ab]-4bc\}-(b+c)^2$
$=a^2-\{2ab-[-a^2+b^2-2bc+c^2+2ab]-4bc\}-(b+c)^2$
$=a^2-\{2ab+a^2-b^2+2bc-c^2-2ab-4bc\}-(b+c)^2$
$=a^2-2ab-a^2+b^2-2bc+c^2+2ab+4bc-b^2-2bc-c^2$
$=0.$

49. $\{ac-(a-b)(b+c)\}-b\{b-(a-c)\}$
$=\{ac-(ab-b^2+ac-bc)\}-b(b-a+c)$
$=ac-ab+b^2-ac+bc-b^2+ab-bc$
$=0.$

50. $5\{(a-b)x-cy\}-2\{a(x-y)-bx\}-\{3ax-(5c-2a)y\}$
$=5\{ax-bx-cy\}-2\{ax-ay-bx\}-\{3ax-5cy+2ay\}$
$=5ax-5bx-5cy-2ax+2ay+2bx-3ax+5cy-2ay$
$=-3bx.$

51. $(x-1)(x-2)-3x(x+3)+2\{(x+2)(x+1)-3\}$
$=x^2-3x+2-3x^2-9x+2\{x^2+3x+2-3\}$
$=x^2-3x+2-3x^2-9x+2x^2+6x+4-6$
$=-6x.$

52. $\{(2a+b)^2+(a-2b)^2\}\{(3a-2b)^2-(2a-3b)^2\}$
$=\{(4a^2+4ab+b^2)+(a^2-4ab+4b^2)\}\{(9a^2-12ab+4b^2)$
$\qquad -(4a^2-12ab+9b^2)\}$
$=\{4a^2+4ab+b^2+a^2-4ab+4b^2\}\{9a^2-12ab+4b^2$
$\qquad -4a^2+12ab-9b^2\}$
$=\{5a^2+5b^2\}\{5a^2-5b^2\}$
$=25a^4-25b^4.$

53. $4(a-3b)(a+3b)-2(a-6b)^2-2(a^2+6b^2)$
$=4(a^2-9b^2)-2(a^2-12ab+36b^2)-2a^2-12b^2$
$=4a^2-36b^2-2a^2+24ab-72b^2-2a^2-12b^2$
$=24ab-120b^2.$

54. $x^2(x^2+y^2)^2 - 2x^2y^2(x+y)(x-y) - (x^3-y^3)^2$
$= x^2(x^4+2x^2y^2+y^4) - 2x^2y^2(x^2-y^2) - (x^3-y^3)^2$
$= x^6 + 2x^4y^2 + x^2y^4 - 2x^4y^2 + 2x^2y^4 - x^6 + 2x^3y^3 - y^6$
$= 3x^2y^4 + 2x^3y^3 - y^6.$

55. $16(a^2+b^2)(a^2-b^2) - (2a-3)(2a+3)(4a^2+9)$
$+ (2b-3)(2b+3)(4b^2+9)$
$= 16(a^4-b^4) - (4a^2-9)(4a^2+9) + (4b^2-9)(4b^2+9)$
$= 16a^4 - 16b^4 - 16a^4 + 81 + 16b^4 - 81$
$= 0.$

Exercise 15.

1. $\frac{+264}{+4} = 66.$

2. $\frac{-3840}{-8} = 480.$

3. $\frac{+3840}{+30} = 128.$

4. $\frac{-2568}{+12} = -214.$

5.
$$-49.)\overline{1063.3}\ (-21.7$$
98
83
49
343
343

6.
$$345)\overline{-424.35}\ (-1.23$$
345
793
690
1035
1035

7.
$$+24)\overline{-264}\ (-11$$
24
24
24

8.
$$-85)\overline{-3670}\ (+43\tfrac{3}{17}$$
340
270
255
$\frac{15}{85} = \frac{3}{17}$

9.
$$-61)\overline{6.8503}\ (-0.1123$$
61
75
61
140
122
183
183

10.
$$+324)\overline{-7.1560}\ (-0.022\tfrac{7}{81}$$
648
676
648
$\frac{28}{324} = \frac{7}{81}$

11.
$$-314159.)\overline{-100000.0}\ (+0.31831$$
942477
575230
314159
2610710
2513272
974380
942477
319030
314159
4871

12.
$$-314159)\overline{-3183.10}\ (+0.0101321$$
314159
415100
314159
1009410
942457
669330
628318
410120
314159
95961

Exercise 16.

1. $\frac{+ab}{+a} = b.$

2. $\frac{+ab}{-a} = -b.$

3. $\frac{-ab}{+a} = -b.$

4. $\frac{-ab}{-a} = b.$

5. $\frac{6mx}{2x} = 3m.$

6. $\frac{12a^4}{-3a} = -4a^3.$

7. $\frac{10ab}{2bc} = \frac{5a}{c}$

8. $\frac{x^3}{-x^5} = -\frac{1}{x^2}$

9. $\frac{-12am}{-2m} = 6a.$

10. $\frac{35abc}{5bd} = \frac{7ac}{d}$

11. $\frac{abx}{5aby} = \frac{x}{5y}$

12. $\frac{27a^7}{-3a^3} = -9a^4.$

13. $\frac{-3bmx}{4ax^2} = -\frac{3bm}{4ax}$

14. $\frac{ab^2c^3}{abc} = bc^2.$

15. $\frac{m^5p^2x^4}{mp^2x^2} = m^4x^2.$

16. $\frac{-51abdy^3}{3bdy} = -17ay.$

17. $\frac{225m^2y}{25my^2} = \frac{9m}{y}$

18. $\frac{30x^3y^3}{-5x^3y} = -\frac{6y^2}{x}.$

19. $\frac{4a^2m^4x^5}{5a^5m^3x} - \frac{4mx^4}{5a^3}$

20. $\frac{42x^3y^2z^4}{7xy^2z^3} = 6x^2z.$

21. $\frac{-3a^2b^3c^4d^5}{-a^4b^3cd^3} = \frac{3bc^3d^2}{a^2}$

22. $\frac{12am^5n^4p^3q^2}{4m^2n^3p^4q^5} = \frac{3am^3n}{pq^3}$

23. $(4a^2bx^3 \times 10a^2b^3z) + 5a^3b^3x^3$
$= 40a^4b^4x^4 + 5a^3b^3x^3$
$= 8ab^3x^3.$

24. $(21x^2y^4z^6 + 3xy^2z)(-2x^3y^3z)$
$= (7xy^2z^5)(-2x^3y^3z)$
$= -14x^4y^4z^6.$

25. $104ab^3x^9 + (91a^5b^6x^7 + 7a^4b^4x)$
$= 104ab^3x^9 + 13ab^2x^6$
$= 8bx^3.$

26. $(24a^5b^3x + 3a^2b^2)$
$+ (35a^6b^2x^2 + -5a^3bx)$
$= (8a^3bx) + (-7a^3bx)$
$= a^3bx.$

27. $85a^{4m+1} + 5a^{4m-2}$
$= 17a^{4m+1-(4m-2)}$
$= 17a^3.$

28. $\frac{84a^{n-4}}{12a^2}$
$= 7a^{n-4-2}$
$= 7a^{n-6}.$

Exercise 17.

1. $x^2-7x+12 \mid x-3$

$x^2-3x \mid x-4$

$-4x+12$

$-4x+12$

2. $x^2+x-72 \mid x+9$

$x^2+9x \mid x-8$

$-8x-72$

$-8x-72$

3. $2x^3-x^2+3x-9 \mid 2x-3$

$2x^3-3x^2 \mid x^2+x+3$

$2x^2+3x-9$

$2x^2-3x$

$6x-9$

$6x-9$

4. $6x^3+14x^2-4x+24 \mid 2x+6$

$6x^3+18x^2 \mid 3x^2-2x+4$

$-4x^2-4x+24$

$-4x^2-12x$

$8x+24$

$8x+24$

5. $9x^3+3x^2+x-1 \mid 3x-1$

$9x^3-3x^2 \mid 3x^2+2x+1$

$6x^2+x-1$

$6x^2-2x$

$3x-1$

$3x-1$

6. $7x^3-24x^2+58x-21 \mid 7x-3$

$7x^3-3x^2 \mid x^2-3x+7$

$-21x^2+58x-21$

$-21x^2+9x$

$49x-21$

$49x-21$

7. $x^6-1 \mid x-1$

$x^6-x^5 \mid x^5+x^4+x^3+x^2+x+1$

x^5-1

x^5-x^4

x^4-1

x^4-x^3

x^3-1

x^3-x^2

x^2-1

x^2-x

$x-1$

$x-1$

8. $a^3-2ab^2+b^3 \mid a-b$

$a^3-a^2b \mid a^2+ab-b^2$

$a^2b-2ab^2+b^3$

a^2b-ab^2

$-ab^2+b^3$

$-ab^2+b^3$

9 $x^4-81y^4 \mid x-3y$

$x^4-3x^3y \mid x^3+3x^2y+9xy^2+27y^3$

$3x^3y-81y^4$

$3x^3y-9x^2y^2$

$9x^2y^2-81y^4$

$9x^2y^2-27xy^3$

$27xy^3-81y^4$

$27xy^3-81y^4$

10. $x^5-y^5 \mid x-y$

$x^5-x^4y \mid x^4+x^3y+x^2y^2+xy^3+y^4$

x^4y-y^5

$x^4y-x^3y^2$

$x^3y^2-y^5$

$x^3y^2-x^2y^3$

$x^2y^3-y^5$

$x^2y^3-xy^4$

xy^4-y^5

xy^4-y^5

11 $a^5+32b^5 \mid a+2b$

$a^5+2a^4b \mid a^4-2a^3b+4a^2b^2-8ab^3+16b^4$

$-2a^4b+32b^5$

$-2a^4b-4a^3b^2$

$4a^3b^2+32b^5$

$4a^3b^2+8a^2b^3$

$-8a^2b^3+32b^5$

$-8a^2b^3-16ab^4$

$16ab^4+32b^5$

$16ab^4+32b^5$

12 $2a^4+27ab^3-81b^4 \mid a+3b$

$2a^4+6a^3b \mid 2a^3-6a^2b+18ab^2-27b^3$

$-6a^3b+27ab^3-81b^4$

$-6a^3b-18a^2b^2$

$18a^2b^2+27ab^3-81b^4$

$18a^2b^2+54ab^3$

$-27ab^3-81b^4$

$-27ab^3-81b^4$

13. $x^4-5x^3+11x^2-12x+6 \mid x^2-3x+3$

$x^4-3x^3+3x^2 \mid x^2-2x+2$

$-2x^3+8x^2-12x$

$-2x^3+6x^2-6x$

$2x^2-6x+6$

$2x^2-6x+6$

14. $x^4+x^3-9x^2-16x-4 \mid x^2+4x+4$

$x^4+4x^3+4x^2 \mid x^2-3x-1$

$-3x^3-13x^2-16x-4$

$-3x^3-12x^2-12x$

$-x^2-4x-4$

$-x^2-4x-4$

15. $x^4-13x^2+36 \mid x^2+5x+6$

$x^4+5x^3+6x^2 \mid x^2-5x+6$

$-5x^3-19x^2+36$

$-5x^3-25x^2-30x$

$6x^2+30x+36$

$6x^2+30x+36$

16. $x^4+64 \mid x^2-4x+8$

$x^4+4x^3+8x^2 \mid x^2-4x+8$

$-4x^3-8x^2+64$

$-4x^3-16x^2-32x$

$8x^2+32x+64$

$8x^2+32x+64$

17. $x^4+x^3-24x^2-35x+57 \mid x^2+2x-3$

$x^4+2x^3-3x^2 \mid x^2-x-19$

$-x^3-21x^2-35x$

$-x^3-2x^2+3x$

$-19x^2-38x+57$

$-19x^2-38x+57$

18. $1-x-3x^2-x^5 \mid 1+2x+x^2$

$1+2x+x^2 \mid 1-3x+2x^2-x^3$

$-3x-4x^2-x^5$

$-3x-6x^2-3x^3$

$2x^2+3x^3-x^5$

$2x^2+4x^3+2x^4$

$-x^3-2x^4-x^5$

$-x^3-2x^4-x^5$

19. $x^6-2x^3+1 \mid x^2-2x+1$

$x^6-2x^5+x^4 \mid x^4+2x^3+3x^2+2x+1$

$2x^5-x^4-2x^3+1$

$2x^5-4x^4+2x^3$

$3x^4-4x^3+1$

$3x^4-6x^3+3x^2$

$2x^3-3x^2+1$

$2x^3-4x^2+2x$

x^2-2x+1

x^2-2x+1

20. $a^4+2a^2b^2+9b^4 \mid a^2-2ab+3b^2$

$a^4-2a^3b+3a^2b^2 \mid a^2+2ab+3b^2$

$2a^3b-a^2b^2+9b^4$

$2a^3b-4a^2b^2+6ab^3$

$3a^2b^2-6ab^3+9b^4$

$3a^2b^2-6ab^3+9b^4$

21. $4x^5-x^3+4x \mid 2x^2+3x+2$

$4x^5+6x^4+4x^3 \mid 2x^3-3x^2+2x$

$-6x^4-5x^3+4x$

$-6x^4-9x^3-6x^2$

$4x^3+6x^2+4x$

$4x^3+6x^2+4x$

22. $a^5-243 \mid a-3$

$a^5-3a^4 \mid a^4+3a^3+9a^2+27a+81$

$3a^4-243$

$3a^4-9a^3$

$9a^3-243$

$9a^3-27a^2$

$27a^2-243$

$27a^2-81a$

$81a-243$

$81a-243$

23. $18x^4 - 45x^3 + 82x^2 - 67x + 40 \mid 3x^2 - 4x + 5$

$18x^4 - 24x^3 + 30x^2 \qquad\qquad \mid 6x^2 - 7x + 8$

$-21x^3 + 52x^2 - 67x$

$-21x^3 + 28x^2 - 35x$

$24x^2 - 32x + 40$

$24x^2 - 32x + 40$

24. $x^4 - 9x^2 - 6xy - y^2 \mid x^2 + 3x + y$

$x^4 + 3x^3 + x^2y \qquad\quad \mid x^2 - 3x - y$

$-3x^3 - 9x^2 - x^2y - 6xy - y^2$

$-3x^3 - 9x^2 \qquad\quad - 3xy$

$-x^2y - 3xy - y^2$

$-x^2y - 3xy - y^2$

25. $x^4 - 6x^3y + 9x^2x^2 - 4y^4 \mid x^2 - 3xy + 2y^2$

$x^4 - 3x^3y + 2x^2y^2 \qquad\quad \mid x^2 - 3xy - 2y^2$

$-3x^3y + 7x^2y^2 - 4y^4$

$-3x^3y + 9x^2y^2 - 6xy^3$

$-2x^2y^2 + 6xy^3 - 4y^4$

$-2x^2y^2 + 6xy^3 - 4y^4$

26. $x^4 + x^2y^2 + y^4 \mid x^2 - xy + y^2$

$x^4 - x^3y + x^2y^2 \mid x^2 + xy + y^2$

$x^3y + y^4$

$x^3y - x^2y^2 + xy^3$

$x^2y^2 - xy^3 + y^4$

$x^2y^2 - xy^3 + y^4$

27. $x^5 + x^3 + x^4y - x^3y^3 - 2xy^2 + y^3 \mid x^3 + x - y$

$x^5 + x^3 - x^2y \qquad\qquad\qquad\quad \mid x^2 + xy - y^3$

$x^4y + x^2y - x^3y^2 - 2xy^2 + y^3$

$x^4y + x^2y \qquad\quad - xy^2$

$-x^3y^2 - xy^2 + y^3$

$-x^3y^2 - xy^2 + y^3$

28. $2x^2 + xy - xz - 3y^2 - 4yz - z^2 \mid 2x + 3y + z$

$2x^2 + 3xy + xz \qquad\qquad\qquad\quad \mid x - y - z$

$-2xy - 2xz - 3y^2 - 4yz - z^2$

$-2xy \qquad - 3y^2 - yz$

$-2xz \qquad - 3yz - z^2$

$-2xz \qquad - 3yz - z^2$

29. $12-38x+82x^2-112x^3+106x^4-70x^5 \mid 3-5x+7x^2$

$12-20x+28x^2 \mid 4-6x+8x^2-10x^3$

$-18x+54x^2-112x^3$

$-18x+30x^2-42x^3$

$24x^2-70x^3+106x^4$

$24x^2-40x^3+56x^4$

$-30x^3+50x^4-70x^5$

$-30x^3+50x^4-70x^5$

30. $x^5 + y^5 \mid x^4-x^3y+x^2y^2-xy^3+y^4$

$x^5-x^4y+x^3y^2-x^2y^3+xy^4 \mid x+y$

$x^4y-x^3y^2+x^2y^3-xy^4+y^5$

$x^4y-x^3y^2+x^2y^3-xy^4+y^5$

31. $2x^4-7x^3y+2x^2y^2-2xy^3-y^4 \mid 2x^2-xy+y^2$

$2x^4-x^3y+x^2y^2 \mid x^2-3xy-y^2$

$-6x^3y+x^2y^2-2xy^3$

$-6x^3y+3x^2y^2-3xy^3$

$-2x^2y^2+xy^3-y^4$

$-2x^2y^2+xy^3-y^4$

32. $16x^4+4x^2y^2+y^4 \mid 4x^2-2xy+y^2$

$16x^4-8x^3y+4x^2y^2 \mid 4x^2+2xy+y^2$

$8x^3y+y^4$

$8x^3y-4x^2y^2+2xy^3$

$4x^2y^2-2xy^3+y^4$

$4x^2y^2-2xy^3+y^4$

33. $32a^5b-56a^4b^2+8a^3b^3-4a^2b^4-ab^5 \mid -4a^2b+6ab^2+b^3$

$32a^5b-48a^4b^2-8a^3b^3 \mid -8a^3+2a^2b-ab^2$

$-8a^4b^2+16a^3b^3-4a^2b^4$

$-8a^4b^2+12a^3b^3+2a^2b^4$

$4a^3b^3-6a^2b^4-ab^5$

$4a^3b^3-6a^2b^4-ab^5$

34. $1+5x^3-6x^4 \mid 1-x+3x^2$

$1-x+3x^2 \mid 1+x-2x^2$

$x-3x^2+5x^3-6x^4$

$x-x^2+3x^3$

$-2x^2+2x^3-6x^4$

$-2x^2+2x^3-6x^4$

35. $1-51a^3b^3-52a^4b^4 \mid -1+3ab+4a^2b^2$

$1-3ab-4a^2b^2 \mid -1-3ab-13a^2b^3$

$3ab+4a^2b^2-51a^3b^3-52a^4b^4$

$3ab-9a^2b^2-12a^3b^3$

$13a^2b^2-39a^3b^3-52a^4b^4$

$13a^2b^2-39a^3b^3-52a^4b^4$

36. $x^7y-xy^7 \mid x^3y-2x^2y^2+2xy^3-y^4$

$x^7y-2x^6y^2+2x^5y^3-x^4y^4 \mid x^4+2x^3y+2x^2y^2+xy^3$

$2x^6y^2-2x^5y^3+x^4y^4-xy^7$

$2x^6y^2-4x^5y^3+4x^4y^4-2x^3y^5$

$2x^5y^3-3x^4y^4+2x^3y^5-xy^7$

$2x^5y^3-4x^4y^4+4x^3y^5-2x^2y^6$

$x^4y^4-2x^3y^5+2x^2y^6-xy^7$

$x^4y^4-2x^3y^5+2x^2y^6-xy^7$

37. $x^6-6x^5y+15x^4y^2-20x^3y^3+15x^2y^4-6xy^5+y^6 \mid x^3-3x^2y+3xy^2-y^3$

$x^6-3x^5y+3x^4y^2-x^3y^3 \mid x^3-3x^2y+3xy^2-y^3$

$-3x^5y+12x^4y^2-19x^3y^3+15x^2y^4$

$-3x^5y+9x^4y^2-9x^3y^3+3x^2y^4$

$3x^4y^2-10x^3y^3+12x^2y^4-6xy^5$

$3x^4y^2-9x^3y^3+9x^2y^4-3xy^5$

$-x^3y^3+3x^2y^4-3xy^5+y^6$

$-x^3y^3+3x^2y^4-3xy^5+y^6$

38. $a^7-2a^6b-2a^4b^3+2a^3b^4-6a^2b^5-3ab^6 \mid a^3-2a^2b-ab^2$

$a^7-2a^6b-a^5b^2 \mid a^4+a^2b^2+3b^4$

$a^5b^2-2a^4b^3+2a^3b^4-6a^2b^5-3ab^6$

$a^5b^2-2a^4b^3-a^3b^4$

$3a^3b^4-6a^2b^5-3ab^6$

$3a^3b^4-6a^2b^5-3ab^6$

39.

$81x^6y-54x^5y^2-18x^3y^4+18x^2y^5-18xy^6-9y^7 \mid 3x^4+x^2y^2+y^4$

$81x^6y+27x^4y^3+27x^2y^5 \mid 27x^2y-18xy^2-9y^3$

$-54x^5y^2-27x^4y^3-18x^3y^4-9x^2y^5-18xy^6-9y^7$

$-54x^5y^2-18x^3y^4-18xy^6$

$-27x^4y^3-9x^2y^5-9y^7$

$-27x^4y^3-9x^2y^5-9y^7$

29. $12-38x+82x^2-112x^3+106x^4-70x^5 \mid 3-5x+7x^2$

$12-20x+28x^2 \qquad\qquad \mid 4-6x+8x^2-10x^3$

$-18x+54x^2-112x^3$

$-18x+30x^2-42x^3$

$24x^2-70x^3+106x^4$

$24x^2-40x^3+56x^4$

$-30x^3+50x^4-70x^5$

$-30x^3+50x^4-70x^5$

30. $x^5 \qquad\qquad +y^5 \mid x^4-x^3y+x^2y^2-xy^3+y^4$

$x^5-x^4y+x^3y^2-x^2y^3+xy^4 \mid x+y$

$x^4y-x^3y^2+x^2y^3-xy^4+y^5$

$x^4y-x^3y^2+x^2y^3-xy^4+y^5$

31. $2x^4-7x^3y+2x^2y^2-2xy^3-y^4 \mid 2x^2-xy+y^2$

$2x^4-x^3y+x^2y^2 \qquad\qquad \mid x^2-3xy-y^2$

$-6x^3y+x^2y^2-2xy^3$

$-6x^3y+3x^2y^2-3xy^3$

$-2x^2y^2+xy^3-y^4$

$-2x^2y^2+xy^3-y^4$

32. $16x^4+4x^2y^2+y^4 \mid 4x^2-2xy+y^2$

$16x^4-8x^3y+4x^2y^2 \mid 4x^2+2xy+y^2$

$8x^3y+y^4$

$8x^3y-4x^2y^2+2xy^3$

$4x^2y^2-2xy^3+y^4$

$4x^2y^2-2xy^3+y^4$

33. $32a^5b-56a^4b^2+8a^3b^3-4a^2b^4-ab^5 \mid -4a^2b+6ab^2+b^3$

$32a^5b-48a^4b^2-8a^3b^3 \qquad\qquad \mid -8a^3+2a^2b-ab^2$

$-8a^4b^2+16a^3b^3-4a^2b^4$

$-8a^4b^2+12a^3b^3+2a^2b^4$

$4a^3b^3-6a^2b^4-ab^5$

$4a^3b^3-6a^2b^4-ab^5$

34. $1+5x^3-6x^4 \mid 1-x+3x^2$

$1-x+3x^2 \mid 1+x-2x^2$

$x-3x^2+5x^3-6x^4$

$x-x^2+3x^3$

$-2x^2+2x^3-6x^4$

$-2x^2+2x^3-6x^4$

35. $1-51a^3b^3-52a^4b^4 \mid -1+3ab+4a^2b^2$
$1-3ab-4a^2b^2 \mid -1-3ab-13a^2b^2$
$3ab+4a^2b^2-51a^3b^3-52a^4b^4$
$3ab-9a^2b^2-12a^3b^3$
$13a^2b^2-39a^3b^3-52a^4b^4$
$13a^2b^2-39a^3b^3-52a^4b^4$

36. $x^7y-xy^7 \mid x^3y-2x^2y^3+2xy^3-y^4$
$x^7y-2x^6y^2+2x^5y^3-x^4y^4 \mid x^4+2x^3y+2x^2y^2+xy^3$
$2x^6y^2-2x^5y^3+x^4y^4-xy^7$
$2x^6y^2-4x^5y^3+4x^4y^4-2x^3y^5$
$2x^5y^3-3x^4y^4+2x^3y^5-xy^7$
$2x^5y^3-4x^4y^4+4x^3y^5-2x^2y^6$
$x^4y^4-2x^3y^5+2x^2y^6-xy^7$
$x^4y^4-2x^3y^5+2x^2y^6-xy^7$

37. $x^6-6x^5y+15x^4y^2-20x^3y^3+15x^2y^4-6xy^5+y^6 \mid x^3-3x^2y+3xy^2-y^3$
$x^6-3x^5y+3x^4y^2-x^3y^3 \mid x^3-3x^2y+3xy^2-y^3$
$-3x^5y+12x^4y^2-19x^3y^3+15x^2y^4$
$-3x^5y+9x^4y^2-9x^3y^3+3x^2y^4$
$3x^4y^2-10x^3y^3+12x^2y^4-6xy^5$
$3x^4y^2-9x^3y^3+9x^2y^4-3xy^5$
$-x^3y^3+3x^2y^4-3xy^5+y^6$
$-x^3y^3+3x^2y^4-3xy^5+y^6$

38. $a^7-2a^6b-2a^4b^3+2a^3b^4-6a^2b^5-3ab^6 \mid a^3-2a^2b-ab^2$
$a^7-2a^6b-a^5b^2 \mid a^4+a^2b^2+3b^4$
$a^5b^2-2a^4b^3+2a^3b^4-6a^2b^5-3ab^6$
$a^5b^2-2a^4b^3-a^3b^4$
$3a^3b^4-6a^2b^5-3ab^6$
$3a^3b^4-6a^2b^5-3ab^6$

39.
$81x^6y-54x^5y^2-18x^3y^4+18x^2y^5-18xy^6-9y^7 \mid 3x^4+x^2y^2+y^4$
$81x^6y+27x^4y^3+27x^2y^5 \mid 27x^2y-18xy^2-9y^3$
$-54x^5y^2-27x^4y^3-18x^3y^4-9x^2y^5-18xy^6-9y^7$
$-54x^5y^2-18x^3y^4-18xy^6$
$-27x^4y^3-9x^2y^5-9y^7$
$-27x^4y^3-9x^2y^5-9y^7$

40. $a^4 + 2a^3b + 8a^2b^2 + 8ab^3 + 16b^4 \mid a^2 + 4b^2$

$a^4 + 4a^2b^2 \mid a^2 + 2ab + 4b^2$

$2a^3b + 4a^2b^2 + 8ab^3$

$2a^3b + 8ab^3$

$4a^2b^2 + 16b^4$

$4a^2b^2 + 16b^4$

41. $-x^6 + 21x^3y^3 - 24xy^5 + 8y^6 \mid -x^2 + 3xy - y^2$

$-x^6 + 3x^5y - x^4y^2 \mid x^4 + 3x^3y + 8x^2y^2 - 8y^4$

$-3x^5y + x^4y^2 + 21x^3y^3 - 24xy^5 + 8y^6$

$-3x^5y + 9x^4y^2 - 3x^3y^3$

$-8x^4y^2 + 24x^3y^3 - 24xy^5 + 8y^6$

$-8x^4y^2 + 24x^3y^3 - 8x^2y^4$

$8x^2y^4 - 24xy^5 + 8y^6$

$8x^2y^4 - 24xy^5 + 8y^6$

42. $16a^4 + 8a^2b^2 + 9b^4 \mid 4a^2 - 4ab + 3b^2$

$16a^4 - 16a^3b + 12a^2b^2 \mid 4a^2 + 4ab + 3b^2$

$16a^3b - 4a^2b^2 + 9b^4$

$16a^3b - 16a^2b^2 + 12ab^3$

$12a^2b^2 - 12ab^3 + 9b^4$

$12a^2b^2 - 12ab^3 + 9b^4$

43. $a^3 - 3abc + b^3 + c^3 \mid a + b + c$

$a^3 + a^2b + a^2c \mid a^2 - ab - ac + b^2 - bc + c^2$

$-a^2b - a^2c - 3abc + b^3 + c^3$

$-a^2b - ab^2 - abc$

$-a^2c + ab^2 - 2abc + b^3 + c^3$

$-a^2c - abc - ac^2$

$+ab^2 - abc + ac^2 + b^3 + c^3$

$+ab^2 + b^3 + b^2c$

$-abc + ac^2 - b^2c + c^3$

$-abc - b^2c - bc^2$

$ac^2 + bc^2 + c^3$

$ac^2 + bc^2 + c^3$

44. $a^3 - 6abc + 8b^3 + c^3 \mid a^2 - 2ab - ac + 4b^2 - 2bc + c^2$

$a^3 - 2a^2b - a^2c + 4ab^2 - 2abc + ac^2 \mid a + 2b + c$

$+2a^2b + a^2c - 4ab^2 - 4abc - ac^2 + 8b^3 + c^3$

$+2a^2b - 4ab^2 - 2abc + 8b^3 - 4b^2c + 2bc^2$

$+a^2c - 2abc - ac^2 + 4b^2c - 2bc^2 + c^3$

$+a^2c - 2abc - ac^2 + 4b^2c - 2bc^2 + c^3$

45. $a^3+3a^2b+3ab^2+b^3+c^3 \mid a+b+c$

$a^3+a^2b+a^2c \mid a^2+2ab+b^2-ac-bc+c^3$

$2a^2b+3ab^2-a^2c+b^3+c^3$

$2a^2b+2ab^2+2abc$

$ab^2-a^2c-2abc+b^3+c^3$

$ab^2+b^3+b^2c$

$-a^2c-2abc-b^2c+c^3$

$-a^2c-abc-ac^2$

$-abc-b^2c+ac^2+c^3$

$-abc-b^2c-bc^2$

$ac^2+bc^2+c^3$

$ac^2+bc^2+c^3$

Exercise 18.

1. $a^2(b+c)+b^2(a-c)+c^2(a-b)+abc \mid a+b+c$

$a^2(b+c)+b^2(a)+c^2(a)+2abc \mid a(b+c)-bc$

$-abc+b^2(-c)+c^2(-b)$

$-abc+b^2(-c)+c^2(-b)$

2. $x^3-(a+b+c)x^2+(ab+ac+bc)x-abc \mid x^2-(a+b)x+ab$

$x^3-(a+b)x^2+(ab)x \mid x-c$

$-cx^2+(ac+bc)x-abc$

$-cx^2+(ac+bc)x-abc$

3. $x^3-2ax^2+(a^2+ab-b^2)x-a^2b+ab^2 \mid x-a+b$

$x^3-ax^2+bx^2 \mid x^2-(a+b)x+ab$

$-(a+b)x^2+(a^2+ab-b^2)x-a^2b+ab^2$

$-(a+b)x^2+(a^2-b^2)x$

$+abx-a^2b+ab^2$

$+abx-a^2b+ab^2$

4. $x^4-(a^2-b-c)x^2-(b-c)ax+bc \mid x^2-ax+c$

$x^4+(+c)x^2-ax^3 \mid x^2+ax+b$

$ax^3-(a^2-b)x^2-(b-c)ax+bc$

$ax^3-(a^2)x^2+cax$

$+bx^2-bax+bc$

$+bx^2-bax+bc$

5.
$$\begin{array}{l|l}
y^3-(m+n+p)y^2+(mn+mp+np)y-mnp & y-p \\
\underline{y^3-(\qquad\quad +p)y^2} & \overline{y^2-(m+n)y+mn} \\
\quad -(m+n\qquad)y^2+(mn+mp+np)y & \\
\quad \underline{-(m+n\qquad)y^2+(\qquad +mp+np)y} & \\
\qquad\qquad\qquad\qquad mny-mnp & \\
\qquad\qquad\qquad\qquad \underline{mny-mnp} &
\end{array}$$

6.
$$\begin{array}{l|l}
x^4+(5+a)x^3-(4-5a+b)x^2-(4a+5b)x+4b & x^2+5x-4 \\
\underline{x^4+(5\qquad)x^3-(4\qquad\qquad)x^2} & \overline{x^2+ax-b} \\
\qquad ax^3-(\quad -5a+b)x^2-(4a+5b)x & \\
\qquad \underline{ax^3+(\quad +5a\qquad)x^2-(4a\qquad)x} & \\
\qquad\qquad\qquad -bx^2\qquad -5bx+4b & \\
\qquad\qquad\qquad \underline{-bx^2\qquad -5bx+4b} &
\end{array}$$

7.
$$\begin{array}{l|l}
 & x^2-(a+c)x+ac \\
 & \overline{x^2-(b+d)x+bd} \\
x^4-(a+b+c+d)x^3+(ab+ac+ad+bc+bd+cd)x^2-(abc+abd+acd+bcd)x+abcd & \\
\underline{x^4-(a\quad +c\quad)x^3+(\quad +ac\qquad\qquad)x^2} & \\
\quad -(\quad +b\quad +d)x^3+(ab\quad +ad+bc+bd+cd)x^2-(abc+abd+acd+bcd)x & \\
\quad \underline{-(\quad +b\quad +d)x^3+(ab\quad +ad+bc\quad +cd)x^2-(abc\quad +acd\quad)x} & \\
\qquad\qquad\qquad\qquad bdx^2-(\quad +abd\quad +bcd)x+abcd & \\
\qquad\qquad\qquad\qquad \underline{bdx^2-(\quad +abd\quad +bcd)x+abcd} &
\end{array}$$

8.
$$\begin{array}{l|l}
x^5-(m-c)x^4+(n-cm+d)x^3+(r+cn-dm)x^2+(cr+dn)x+dr & x^3-mx^2+nx+r \\
\underline{x^5-(m\quad)x^4+(n\qquad)x^3+(r\qquad)x^2} & \overline{x^2+cx+d} \\
\qquad cx^4+(\quad -cm+d)x^3+(\quad +cn-dm)x^2+(cr+dn)x & \\
\qquad \underline{cx^4+(\quad -cm\quad)x^3+(\quad +cn\quad)x^2+(cr\quad)x} & \\
\qquad\qquad dx^3\qquad -dmx^2\qquad +dnx+dr & \\
\qquad\qquad \underline{dx^3\qquad -dmx^2\qquad +dnx+dr} &
\end{array}$$

9.
$$\begin{array}{l|l}
x^5-mx^4+nx^3-nx^2+mx-1 & x-1 \\
\underline{x^5-x^4} & \overline{x^4+(1-m)x^3+(1-m+n)x^2+(1-m)x+1} \\
(1-m)x^4+nx^3-nx^2+mx-1 & \\
\underline{(1-m)x^4-(1-m)x^3} & \\
\qquad (1-m+n)x^3-nx^2+mx-1 & \\
\qquad \underline{(1-m+n)x^3-(1-m+n)x^2} & \\
\qquad\qquad (1-m)x^2+mx-1 & \\
\qquad\qquad \underline{(1-m)x^2-(1-m)x} & \\
\qquad\qquad\qquad\qquad x-1 & \\
\qquad\qquad\qquad\qquad \underline{x-1} &
\end{array}$$

10.
$$\begin{array}{l|l}
(x+y)^3+3(x+y)^2z+3(x+y)z^2+z^3 & (x+y)^2+2(x+y)z+z^2 \\
\underline{(x+y)^3+2(x+y)^2z+\quad(x+y)z^2} & \overline{x+y+z} \\
\qquad (x+y)^2z+2(x+y)z^2+z^3 & \\
\qquad \underline{(x+y)^2z+2(x+y)z^2+z^3} &
\end{array}$$

EXERCISE 19.

1.
$$5x-1=19,$$
$$5x=19+1,$$
$$5x=20,$$
$$x=4.$$

2.
$$3x+6=12,$$
$$3x=12-6,$$
$$3x=6,$$
$$x=2.$$

3.
$$24x=7x+34,$$
$$24x-7x=34,$$
$$17x=34,$$
$$x=2.$$

4.
$$8x-29=26-3x,$$
$$8x+3x=26+29,$$
$$11x=55,$$
$$x=5.$$

5.
$$12-5x=19-12x,$$
$$-5x+12x=19-12,$$
$$7x=7,$$
$$x=1.$$

6.
$$3x+6-2x=7x,$$
$$3x-2x-7x=-6,$$
$$-6x=-6,$$
$$x=1.$$

7.
$$5x+50=4x+56,$$
$$5x-4x=56-50,$$
$$x=6.$$

8.
$$16x-11=7x+70,$$
$$16x-7x=70+11,$$
$$9x=81,$$
$$x=9.$$

9.
$$24x-49=19x-14,$$
$$24x-19x=49-14,$$
$$5x=35,$$
$$x=7.$$

10.
$$3x+23=78-2x,$$
$$3x+2x=78-23,$$
$$5x=55,$$
$$x=11.$$

11.
$$26-8x=80-14x,$$
$$14x-8x=80-26,$$
$$6x=54,$$
$$x=9.$$

12.
$$13-3x=5x-3,$$
$$-5x-3x=-3-13,$$
$$-8x=-16,$$
$$x=2.$$

13.
$$3x-22=7x+6,$$
$$3x-7x=6+22,$$
$$-4x=28,$$
$$x=-7.$$

14.
$$8+4x=12x-16,$$
$$4x-12x=-16-8,$$
$$-8x=-24,$$
$$x=3.$$

15.
$$5x-(3x-7)=4x-(6x-35),$$
$$5x-3x+7=4x-6x+35,$$
$$-4x+5x-3x+6x=35-7,$$
$$4x=28,$$
$$x=7.$$

16.
$$6x-2(9-4x)+3(5x-7)=10x-(4+16x+35),$$
$$6x-18+8x+15x-21=10x-4-16x-35,$$
$$6x+8x+15x-10x+16x=18+21-4-35,$$
$$35x=0,$$
$$x=0.$$

17. $9x-3(5x-6)+30=0,$
$9x-15x+18+30=0,$
$9x-15x=-18-30,$
$-6x=-48,$
$x=8.$

18. $x-7(4x-11)=14(x-5)-19(8-x)-61,$
$x-28x+77=14x-70-152+19x-61,$
$x-28x-14x-19x=-70-152-61-77,$
$-60x=-360,$
$x=6.$

19. $(x+7)(x-3)=(x-5)(x-15),$
$x^2+4x-21=x^2-20x+75,$
$4x+20x=75+21,$
$24x=96,$
$x=4.$

20. $(x-8)(x+12)=(x+1)(x-6),$
$x^2+4x-96=x^2-5x-6,$
$4x+5x=-6+96,$
$9x=90,$
$x=10.$

21. $(x-2)(7-x)+(x-5)(x+3)-2(x-1)+12=0,$
$9x-14-x^2+x^2-2x-15-2x+2+12=0,$
$9x-2x-2x=14+15-2-12,$
$5x=15,$
$x=3.$

22. $(2x-7)(x+5)=(9-2x)(4-x)+229,$
$2x^2+3x-35=36-17x+2x^2+229,$
$20x=300,$
$x=15.$

23. $14-x-5(x-3)(x+2)+(5-x)(4-5x)=45x-76,$
$14-x-5x^2+5x+30+5x^2-29x+20=45x-76,$
$5x-29x-45x-x=-76-20-30-14,$
$-70x=-140,$
$x=2.$

24. $(x+5)^2-(4-x)^2=21x,$
$(x^2+10x+25)-(16-8x+x^2)=21x,$
$x^2+10x+25-16+8x-x^2=21x,$
$10x+8x-21x=-25+16,$
$-3x=-9,$
$x=3.$

25. $5(x-2)^2+7(x-3)^2=(3x-7)(4x-19)+42,$
$5(x^2-4x+4)+7(x^2-6x+9)=12x^2-85x+133+42,$
$5x^2-20x+20+7x^2-42x+63=12x-85x+133+42,$
$23x=92,$
$x=4.$

EXERCISE 20.

1. To the double of a certain number I add 14, and obtain as a result 154. What is the number?

Let x = the number.
Then $2x$ = its double,
and $2x + 14$ = its double increased by 14.
But 154 = its double increased by 14.
Therefore, $2x + 14 = 154$, $2x = 140$, $x = 70$.

2. To four times a certain number I add 16, and obtain as a result 188. What is the number?

Let x = the number.
Then $4x$ = 4 times the number,
and $4x + 16$ = 4 times the number increased by 16.
But 188 = 4 times the number increased by 16.
Therefore, $4x + 16 = 188$, $4x = 172$, $x = 43$.

3. By adding 46 to a certain number, I obtain as a result a number three times as large as the original number. Find the original number.

Let x = the original number.
Then $3x$ = 3 times the original number.
But $x + 46$ = 3 times the original number.
Therefore, $3x = x + 46$, $2x = 46$, $x = 23$.

4. One number is three times as large as another. If I take the smaller from 16 and the greater from 30, the remainders are equal. What are the numbers?

Let x = the smaller number.
Then $3x$ = the larger number,
and $16 - x$ = 16 diminished by the smaller number;
also, $30 - 3x$ = 30 diminished by the larger number.
Therefore, $16 - x = 30 - 3x$, $2x = 14$, $x = 7$, $3x = 21$.

5. Divide the number 92 into four parts, such that the first exceeds the second by 10, the third by 18, and the fourth by 24.

Let x = the first part.
Then $x - 10$ = the second part,
$x - 18$ = the third part,
$x - 24$ = the fourth part.
and $4x - 52$ = the whole number.
But 92 = the whole number.
$\therefore 4x - 52 = 92$, $4x = 144$, $x = 36$, $x - 10 = 26$, $x - 18 = 18$, $x - 24 = 12$.

6. The sum of two numbers is 20; and, if three times the smaller number be added to five times the greater, the sum is 84. What are the numbers?

Let x = the greater number.
Then $20 - x$ = the smaller number,
$5x$ = 5 times the greater number,
$3(20 - x)$ = 3 times the smaller number,
$5x + 3(20 - x)$ = 5 times the greater + 3 times the smaller.
But 84 = 5 times the greater + 3 times the smaller.
$\therefore 5x + 3(20 - x) = 84$, $5x + 60 - 3x = 84$, $2x = 24$, $x = 12$, $20 - x = 8$.

7. The joint ages of a father and son are 80 years. If the age of the son were doubled, he would be 10 years older than his father. What is the age of each?

Let x = number of years of father's age.
Then $80 - x$ = number of years of son's age,
$2(80 - x)$ = number of years of father's age + 10,
$x + 10$ = number of years of father's age + 10.
$\therefore 2(80 - x) = x + 10$, $160 - 2x = x + 10$, $-3x = -150$, $x = 50$, $80 - x = 30$.

8. A man has 6 sons, each 4 years older than the next younger. The eldest is three times as old as the youngest. What is the age of each?

Let x = number of years of age of youngest.
Then $x + 4$ = number of years of age of second,
$x + 8$ = number of years of age of third,
$x + 12$ = number of years of age of fourth,
$x + 16$ = number of years of age of fifth,
$x + 20$ = number of years of age of sixth.
$3x$ = 3 times age of youngest.
$\therefore 3x = x + 20$, $2x = 20$, $x = 10$, $x + 4 = 14$, $x + 8 = 18$,
$x + 12 = 22$, $x + 16 = 26$, $x + 20 = 30$.

9. Add \$24 to a certain sum and the amount will be as much above \$80 as the sum is below \$80. What is the sum?

Let x = number of dollars in sum.
Then $x + 24 - 80$ = number of dollars above 80,
and $80 - x$ = number of dollars below 80.
$\therefore x + 24 - 80 = 80 - x$, $2x = 136$, $x = 68$.

10. Thirty yards of cloth and 40 yards of silk together cost \$330; and the silk cost twice as much a yard as the cloth. How much does each cost a yard?

Let x = number of dollars one yard of cloth cost.
Then $2x$ = number of dollars one yard of silk cost.
$30x + 80x$ = number of dollars all cost.
But 330 = number of dollars all cost.
$\therefore 30x + 80x = 330$, $110x = 330$, $x = 3$, $2x = 6$.

11. Find the number whose double increased by 24 exceeds 80 by as much as the number itself is less than 100.

Let x = the number.
Then $2x + 24$ = its double increased by 24,
$2x + 24 - 80$ = excess over 80,
$100 - x$ = difference between the number and 100.
$\therefore 2x + 24 - 80 = 100 - x,\ 3x = 156,\ x = 52.$

12. The sum of $500 is divided among A, B, C, and D. A and B have together $280, A and C $260, and A and D $220. How much does each receive?

Let x = number of dollars A has.
Then $280 - x$ = number of dollars B has,
$260 - x$ = number of dollars C has,
$220 - x$ = number of dollars D has,
$760 - 2x$ = number of dollars all have.
But 500 = number of dollars all have.
$\therefore 760 - 2x = 500,\quad -2x = -260,\quad x = 130,$
$280 - x = 150,\ 260 - x = 130,\ 220 - x = 90.$

13. In a company of 266 persons composed of men, women, and children, there are twice as many men as women, and twice as many women as children. How many are there of each?

Let x = number of children.
Then $2x$ = number of women,
and $4x$ = number of men,
$7x$ = whole number.
But 266 = whole number.
$\therefore 7x = 266,\ x = 38,\ 2x = 76,\ 4x = 152.$

14. Find two numbers differing by 8, such that four times the less may exceed twice the greater by 10.

Let x = greater number.
Then $x - 8$ = smaller number.
$4(x - 8) - 2x = 10.$
$\therefore 4x - 32 - 2x = 10,\ 2x = 42,\ x = 21,\ x - 8 = 13.$

15. A is 58 years older than B, and A's age is as much above 60 as B's age is below 50. Find the age of each.

Let x = number of years of B's age.
Then $x + 58$ = number of years of A's age,
$(x + 58) - 60$ = number of years of A's age above 60,
$50 - x$ = number of years of B's age below 50.
$\therefore (x + 58) - 60 = 50 - x,\ 2x = 52,\ x = 26,\ x + 58 = 84.$

16. A man leaves his property, amounting to $7500, to be divided among his wife, his two sons, and three daughters, as follows: a son is to have twice as much as a daughter, and the wife $500 more than all the children together. How much will be the share of each?

Let x = number of dollars in a daughter's share.
Then $2x$ = number of dollars in a son's share,
and $3x$ = number of dollars given to all the daughters;
also, $4x$ = number of dollars given to all the sons.
$7x$ = number of dollars given to all sons and daughters,
$7x + 500$ = number of dollars given to wife,
$7x + 7x + 500$ = number of dollars in whole estate.
But 7500 = number of dollars in whole estate.

$\therefore 7x + 7x + 500 = 7500$, $14x = 7000$, $x = 500$,
$2x = 1000$, $7x + 500 = 4000$.

17. A vessel containing some water was filled by pouring in 42 gallons, and there was then in the vessel seven times as much as at first. How much did the vessel hold?

Let x = number of gallons the vessel holds.
Then $x - 42$ = number of gallons there were in the vessel,
$7(x - 42) = 7$ times number of gallons there were at first.

$\therefore x = 7(x - 42)$, $x = 7x - 294$, $-6x = -294$, $x = 49$.

18. A has $72 and B has $52. B gives A a certain sum; then A has three times as much as B. How much did A receive from B?

Let x = number of dollars A receives from B.
Then $52 - x$ = number of dollars B has left,
and $72 + x$ = number of dollars A has.

$\therefore 72 + x = 3(52 - x)$, $72 + x = 156 - 3x$, $4x = 84$, $x = 21$.

19. Divide 90 into two such parts that four times one part may be equal to five times the other.

Let x = larger number.
Then $90 - x$ = smaller number.

$\therefore 4x = 5(90 - x)$, $4x = 450 - 5x$, $9x = 450$, $x = 50$, $90 - x = 40$.

20. Divide 60 into two such parts that one part exceeds the other by 24.

Let x = lesser part.
Then $x + 24$ = greater part.

$\therefore x + x + 24 = 60$, $2x = 36$, $x = 18$, $x + 24 = 42$.

21. Divide 84 into two such parts that one part may be less than the other by 36.

Let x = lesser part.
Then $x + 36$ = greater part.
$\therefore x + x + 36 = 84,\ 2x = 48,\ x = 24,\ 84 - x = 60.$

22. A is twice as old as B, and 22 years ago he was three times as old as B. What is A's age?

Let x = number of years of B's age.
Then $2x$ = number of years of A's age;
also, $x - 22$ = number of years of B's age 22 years ago,
and $2x - 22$ = number of years of A's age 22 years ago.
$\therefore 3(x - 22) = 2x - 22,\ 3x - 66 = 2x - 22,\ x = 44,\ 2x = 88.$

23. A father is 30 and his son 6 years old. In how many years will the father be just twice as old as the son?

Let x = number of years.
Then $x + 30$ = number of years of father's age x years hence,
and $x + 6$ = number of years of son's age x years hence.
$\therefore 30 + x = 2(x + 6),\ 30 + x = 2x + 12,\ x = 18.$

24. A is twice as old as B, and 20 years since he was three times as old. What is B's age?

Let x = B's age.
Then $2x$ = A's age;
also, $x - 20$ = B's age 20 years since,
and $2x - 20$ = A's age 20 years since.
$\therefore 2x - 20 = 3(x - 20),\ 2x - 20 = 3x - 60,\ x = 40.$

25. A is three times as old as B, and 19 years hence he will be only twice as old as B. What is the age of each?

Let x = number of years of B's age.
Then $3x$ = number of years of A's age;
also, $x + 19$ = number of years of B's age 19 years hence,
and $3x + 19$ = number of years of A's age 19 years hence.
$\therefore 3x + 19 = 2(x + 19),\ 3x + 19 = 2x + 38,\ x = 19,\ 3x = 57.$

26. A man has three nephews; his age is 50, and the joint ages of the nephews is 42. How long will it be before the joint ages of the nephews will be equal to that of the uncle?

Let x = the number of years.
Then $50 + x$ = number of years of uncle's age x years hence.
$3x + 42$ = number of years of nephews' age x years hence.
$\therefore 3x + 42 = 50 + x,\ 2x = 8,\ x = 4.$

27. A sum of money consists of dollars and twenty-five-cent pieces, and amounts to $20. The number of coins is 50. How many are there of each sort?

Let x = number of dollars.
Then $50-x$ = number of quarters,
and $x+\frac{50-x}{4}$ = sum in dollars.
But 20 = sum in dollars.
$\therefore x+\frac{50-x}{4}=20,\ 4x+50-x=80,\ 3x=30,\ x=10,\ 50-x=40.$

28. A person bought 30 pounds of sugar of two different kinds, and paid for the whole $2.94. The better kind cost 10 cents a pound, and the poorer kind 7 cents a pound. How many pounds were there of each kind?

Let x = number of pounds of the better kind.
Then $30-x$ = number of pounds of the poorer kind,
and $10x+7(30-x)$ = number of cents he paid for all.
But 294 = number of cents he paid for all.
$\therefore 10x+7(30-x)=294,\ 10x+210-7x=294,$
$3x=84,\ x=28,\ 30-x=2.$

29. A workman was hired for 40 days, at $1 for every day he worked, but with the condition that for every day he did not work he was to pay 45 cents for his board. At the end of the time he received $22.60. How many days did he work?

Let x = number of days he was idle.
Then $40-x$ = number of days he worked.
and $45x$ = number of cents he paid for board;
also, $4000-100x$ = number of cents he received for work,
$(4000-100x)-45x$ = number of cents cleared.
But 2260 = number of cents cleared.
$\therefore 4000-100x-45x=2260,\ -145x=-1740,\ x=12,\ 40-x=28.$

30. A wine merchant has two kinds of wine; one worth 50 cents a quart, and the other 75 cents a quart. From these he wishes to make a mixture of 100 gallons, worth $2.40 a gallon. How many gallons must he take of each kind?

Let x = number of gallons at $2.
Then $100-x$ = number of gallons at $3,
and $2x$ = number of dollars one part cost;
also, $3(100-x)$ = number of dollars the other part cost,
and $2x+3(100-x)$ = number of dollars all cost.
But 240 = number of dollars all cost.
$\therefore 2x+3(100-x)=240,\ 2x+300-3x=240,\ x=60,\ 100-x=40.$

31. A gentleman gave some children 10 cents each, and had a dollar left. He found that he would have required one dollar more to enable him to give them 15 cents each. How many children were there?

Let x = number of children.
Then $10x$ = number of cents given,
and $10x + 200$ = number of cents required to give each 15 cts.
But $15x$ = number of cents required to give each 15 cts.
$\therefore 10x + 200 = 15x, \quad -5x = -200, \quad x = 40.$

32. Two casks contain equal quantities of vinegar: from the first cask 34 quarts are drawn; from the second, 20 gallons; the quantity remaining in one vessel is now twice that in the other. How much did each cask contain at first?

Let x = number of quarts each contained at first.
Then $x - 34$ = number of quarts first now contains,
and $x - 80$ = number of quarts second now contains.
$2(x - 80)$ = twice the No. quarts second now contains.
$\therefore 2(x - 80) = x - 34, \quad 2x - 160 = x - 34, \quad x = 126.$

33. A gentleman hired a man for 12 months, at the wages of $90 and a suit of clothes. At the end of 7 months the man quits his service, and receives $33.75 and the suit of clothes. What was the price of the suit of clothes?

Let x = number of dollars the suit cost.
Then $x + 90$ = number of dollars he receives by the year.
and $\frac{x+90}{12}$ = number of dollars he receives by the month.
and $\frac{7(x+90)}{12}$ = number of dollars he receives for 7 months.
But $x + 33.75$ = number of dollars he receives for 7 months.
$\therefore \frac{7(x+90)}{12} = x + 33.75, \quad 7x + 630 = 405 + 12x, \quad 5x = 225, \quad x = 45.$

34. A man has three times as many quarters as half-dollars, four times as many dimes as quarters, and twice as many half-dimes as dimes. The whole sum is $7.30. How many coins has he altogether?

Let x = number of half-dollar pieces.
Then $3x$ = number of quarter-dollar pieces,
$12x$ = number of dimes,
$24x$ = number of half-dimes.
$\frac{x}{2} + \frac{3x}{4} + \frac{12x}{10} + \frac{24x}{20}$ = the whole sum in dollars.
But 7.30 = the whole sum in dollars.
$\therefore \frac{x}{2} + \frac{3x}{4} + \frac{12x}{10} + \frac{24x}{20} = 7.30, \quad 10x + 15x + 24x + 24x = 146,$
$73x = 146, \quad x = 2, \quad 3x = 6, \quad 12x = 24, \quad 24x = 48.$

35. A person paid a bill of $15.25 with quarters and half-dollars, and gave 51 pieces of money altogether. How many of each kind were there?

Let x = number of half-dollars.
Then $51 - x$ = number of quarter-dollars.
$50x$ = number of cents in half-dollars,
$25(51 - x)$ = number of cents in quarter-dollars,
$50x + 25(51 - x)$ = number of cents in all.
But 1525 = number of cents in all.
$\therefore\ 50x + 25(51 - x) = 1525,\ 50x + 1275 - 25x = 1525,$
$25x = 250,\ x = 10,\ 51 - x = 41.$

36. A bill of £100 was paid with guineas (21 shillings) and half-crowns (2½ shillings), and 48 more half-crowns than guineas were used. How many of each were paid?

Let x = number of guineas.
Then $x + 48$ = number of half-crowns,
$21x + 2\frac{1}{2}(x + 48)$ = number of shillings in the lot.
But 2000 = number of shillings in the lot.
$\therefore\ 21x + 2\frac{1}{2}(x + 48) = 2000,\ 21x + \frac{5x + 240}{2} = 2000,$
$42x + 5x + 240 = 4000,\ 47x = 3760,\ x = 80,\ x + 48 = 128.$

Exercise 21.

1. $(x + y)^2 = x^2 + 2xy + y^2.$

2. $(y - z)^2 = y^2 - 2yz + z^2.$

3. $(2x + 1)^2 = 4x^2 + 4x + 1.$

4. $(2a + 5b)^2 = 4a^2 + 20ab + 25b^2.$

5. $(1 - x^2)^2 = 1 - 2x^2 + x^4.$

6. $(3ax - 4x^2)^2 = 9a^2x^2 - 24ax^3 + 16x^4.$

7. $(1 - 7a)^2 = 1 - 14a + 49a^2.$

8. $(5xy + 2)^2 = 25x^2y^2 + 20xy + 4.$

9. $(ab + cd)^2 = a^2b^2 + 2abcd + c^2d^2.$

10. $(3mn - 4)^2 = 9m^2n^2 - 24mn + 16.$

11. $(12 + 5x)^2 = 144 + 120x + 25x^2.$

12. $(4xy^2 - yz^2)^2 = 16x^2y^4 - 8xy^3z^2 + y^2z^4.$

13. $(3abc - bcd)^2 = 9a^2b^2c^2 - 6ab^2c^2d + b^2c^2d^2.$

14. $(4x^3 - xy^2)^2 = 16x^6 - 8x^4y^2 + x^2y^4.$

15. $(x + y)(x - y) = x^2 - y^2.$

16. $(2a + b)(2a - b) = 4a^2 - b^2.$

17. $(1+a+b)(1-a-b)$
$=[1+(a+b)][1-(a+b)]$
$=1-(a+b)^2$
$=1-a^2-2ab-b^2.$

18. $(1-a+b)(1+a-b)$
$=[1-(a-b)][1+(a-b)]$
$=1-(a-b)^2$
$=1-a^2+2ab-b^2.$

19. $(a^2+ab+b^2)(a^2-ab+b^2)$
$=[(a^2+b^2)+ab][(a^2+b^2)-ab]$
$=(a^2+b^2)^2-a^2b^2$
$=a^4+2a^2b^2+b^4-a^2b^2$
$=a^4+2a^2b^2-a^2b^2+b^4$
$=a^4+a^2b^2+b^4.$

20. $(3a+2b-c)(3a-2b+c)$
$=[3a+(2b-c)][3a-(2b-c)]$
$=9a^2-(2b-c)^2$
$=9a^2-(4b^2-4bc+c^2)$
$=9a^2-4b^2+4bc-c^2.$

Exercise 22.

1. $(x+y+z)^2=x^2+y^2+z^2+2xy+2xz+2yz.$
2. $(x-y+z)^2=x^2+y^2+z^2-2xy+2xz-2yz.$
3. $(m+n-p-q)^2=m^2+n^2+p^2+q^2+2mn-2mp-2mq-2np-2nq+2pq.$
4. $(x^2+2x-3)^2=x^4+4x^3-2x^2-12x+9.$
5. $(x^2-6x+7)^2=x^4-12x^3+50x^2-84x+49.$
6. $(2x^2-7x+9)^2=4x^4-28x^3+85x^2-126x+81.$
7. $(x^2+y^2-z^2)^2=x^4+y^4+z^4+2x^2y^2-2x^2z^2-2y^2z^2.$
8. $(x^4-4x^2y^2+y^4)^2=x^8+18x^4y^4+y^8-8x^6y^2-8x^2y^6.$
9. $(a^3+b^3+c^3)^2=a^6+b^6+c^6+2a^3b^3+2a^3c^3+2b^3c^3.$
10. $(x^3-y^3-z^3)^2=x^6+y^6+z^6-2x^3y^3-2x^3z^3+2y^3z^3.$
11. $(x+2y-3z)^2=x^2+4y^2+9z^2+4xy-6xz-12yz.$
12. $(x^2-2y^2+5z^2)^2=x^4+4y^4+25z^4-4x^2y^2+10x^2z^2-20y^2z^2.$
13. $(x^2+2x-2)^2=x^4+4x^3-8x+4.$
14. $(x^2-5x+7)^2=x^4+39x^2-10x^3-70x+49.$
15. $(2x^2-3x-4)^2=4x^4-12x^3-7x^2+24x+16.$
16. $(x+2y+3z)^2=x^2+4y^2+9z^2+4xy+6xz+12yz.$

Exercise 23.

1. $(x+2)(x+3) = x^2 + 5x + 6.$
2. $(x+1)(x+5) = x^2 + 6x + 5.$
3. $(x-3)(x-6) = x^2 - 9x + 18.$
4. $(x-8)(x-1) = x^2 - 9x + 8.$
5. $(x-8)(x+1) = x^2 - 7x - 8.$
6. $(x-2)(x+5) = x^2 + 3x - 10.$
7. $(x-3)(x+7) = x^2 + 4x - 21.$
8. $(x-2)(x-4) = x^2 - 6x + 8.$
9. $(x+1)(x+11) = x^2 + 12x + 11.$
10. $(x-2a)(x+3a) = x^2 + ax - 6a^2.$
11. $(x-c)(x-d) = x^2 - (c+d)x + cd.$
12. $(x-4y)(x+y) = x^2 - 3xy - 4y^2.$
13. $(a-2b)(a-5b) = a^2 - 7ab + 10b^2.$
14. $(x^2 + 2y^2)(x^2 + y^2) = x^4 + 3x^2y^2 + 2y^4.$
15. $(x^2 - 3xy)(x^2 + xy) = x^4 - 2x^3y - 3x^2y^2.$
16. $(ax - 9)(ax + 6) = a^2x^2 - 3ax - 54.$
17. $(x+a)(x-b) = x^2 + (a-b)x - ab.$
18. $(x-11)(x+4) = x^2 - 7x - 44.$
19. $(x+12)(x-11) = x^2 + x - 132.$
20. $(x-10)(x-5) = x^2 - 15x + 50.$

Exercise 24.

1. $\dfrac{1-4x^2}{1-2x} = 1 + 2x.$
2. $\dfrac{1-4x^2}{1+2x} = 1 - 2x.$
3. $\dfrac{9a^2-b^2}{3a+b} = 3a - b.$
4. $\dfrac{9a^2-b^2}{3a-b} = 3a + b.$
5. $\dfrac{16a^2-9b^2}{4a+3b} = 4a - 3b.$
6. $\dfrac{1-9z^2}{1-3z} = 1 + 3z.$
7. $\dfrac{a^2b^2-c^2}{ab+c} = ab - c.$
8. $\dfrac{4x^2-16y^2}{2x+4y} = 2x - 4y.$
9. $\dfrac{49-4a^2}{7-2a} = 7 + 2a.$
10. $\dfrac{x^2-81y^2}{x+9y} = x - 9y.$
11. $\dfrac{1-(x-y)^2}{1+(x-y)} = 1 - x + y.$
12. $\dfrac{a^2-(b+c)^2}{a+(b+c)} = a - b - c.$

13. $\frac{(x+y)^2-25}{(x+y)-5} = x+y+5.$

14. $\frac{1-(a-5b)^2}{1+(a-5b)} = 1-a+5b.$

15. $\frac{64-(2b+3c)^2}{8-(2b+3c)} = 8+2b+3c.$

16. $\frac{(a-b)^2-(c-d)^2}{(a-b)+(c-d)} = a-b-c+d.$

Exercise 25.

1. $(y^3-1)\div(y-1)$
$= y^2+y+1.$

2. $(b^3-125)\div(b-5)$
$= b^2+5b+25.$

3. $(a^3-216)\div(a-6)$
$= a^2+6a+36.$

4. $(x^3-343)\div(x-7)$
$= x^2+7x+49.$

5. $(1-8x^3)\div(1-2x)$
$= 1+2x+4x^2.$

6. $(8a^3x^3-1)\div(2ax-1)$
$= 4a^2x^2+2ax+1.$

7. $(1-27x^3y^3)\div(1-3xy)$
$= 1+3xy+9x^2y^2.$

8. $(64a^3b^3-27x^3)\div(4ab-3x)$
$= 16a^2b^2+12abx+9x^2.$

9. $(x^3+y^3)\div(x+y)$
$= x^2-xy+y^2.$

10. $(1+8a^3)\div(1+2a)$
$= 1-2a+4a^2.$

11. $(27a^3+b^3)\div(3a+b)$
$= 9a^2-3ab+b^2.$

12. $(8a^3x^3+1)\div(2ax+1)$
$= 4a^2x^2-2ax+1.$

13. $(x^3+27y^3)\div(x+3y)$
$= x^2-3xy+9y^2.$

14. $(512x^3y^3+z^3)\div(8xy+z)$
$= 64x^2y^2-8xyz+z^2.$

15. $(729a^3+216b^3)\div(9a+6b)$
$= 81a^2-54ab+36b^2.$

16. $(64a^3+1000b^3)\div(4a+10b)$
$= 16a^2-40ab+100b^2.$

17. $(64a^3b^3+27x^3)\div(4ab+3x)$
$= 16a^2b^2-12abx+9x^2.$

18. $(x^3+343)\div(x+7)$
$= x^2-7x+49.$

19. $(27x^3y^3+8z^3)\div(3xy+2z)$
$= 9x^2y^2-6xyz+4z^2.$

Exercise 26.

1. $(x^4 - y^4) \div (x - y)$
$= x^3 + x^2y + xy^2 + y^3.$

2. $(x^4 - y^4) \div (x + y)$
$= x^3 - x^2y + xy^2 - y^3.$

3. $(a^6 - x^6) \div (a - x)$
$= a^5 + a^4x + a^3x^2 + a^2x^3 + ax^4 + x^5.$

4. $(a^6 - x^6) \div (a + x)$
$= a^5 - a^4x + a^3x^2 - a^2x^3 + ax^4 - x^5.$

5. $(81\,a^4x^4 - 1) \div (3\,ax - 1)$
$= 27\,a^3x^3 + 9\,a^2x^2 + 3\,ax + 1.$

6. $(64\,a^6 - b^6) \div (2\,a - b)$
$= 32\,a^5 + 16\,a^4b + 8\,a^3b^2 + 4\,a^2b^3 + 2\,ab^4 + b^5.$

7. $(a^5 + 32\,b^5) \div (a + 2\,b)$
$= a^4 - 2\,a^3b + 4\,a^2b^2 - 8\,ab^3 + 16\,b^4.$

8. $(a^5 - 32\,b^5) \div (a - 2\,b)$
$= a^4 + 2\,a^3b + 4\,a^2b^2 + 8\,ab^3 + 16\,b^4.$

9. $(1 - 243\,a^5) \div (1 - 3\,a)$
$= 1 + 3\,a + 9\,a^2 + 27\,a^3 + 81\,a^4.$

10. $(243\,a^5 + 1) \div (3\,a + 1)$
$= 81\,a^4 - 27\,a^3 + 9\,a^2 - 3\,a + 1.$

11. $(x^7 - y^7) \div (x - y)$
$= x^6 + x^5y + x^4y^2 + x^3y^3 + x^2y^4 + xy^5 + y^6.$

12. $(a^{10} - 1024) \div (a + 2)$
$= a^9 - 2\,a^8 + 4\,a^7 - 8\,a^6 + 16\,a^5 - 32\,a^4 + 64\,a^3$
$- 128\,a^2 + 256\,a - 512.$

Exercise 27.

1. $5a^2 - 15a$
$= 5a(a - 3)$.

2. $6a^3 + 18a^2 - 12a$
$= 6a(a^2 + 3a - 2)$.

3. $49x^2 - 21x + 14$
$= 7(7x^2 - 3x + 2)$.

4. $4x^2y - 12x^2y^2 + 8xy^3$
$= 4xy(x^2 - 3xy + 2y^2)$.

5. $y^4 - ay^3 + by^2 + cy$
$= y(y^3 - ay^2 + by + c)$.

6. $6a^5b^3 - 21a^4b^2 + 27a^3b^4$
$= 3a^3b^2(2a^2b - 7a + 9b^2)$.

7. $54x^2y^6 + 108x^4y^5 - 243x^5y^5$
$= 27x^2y^5(2 + 4x^2y^2 - 9x^4y^3)$.

8. $45x^7y^{10} - 90x^5y^7 - 360x^4y^5$
$= 45x^4y^7(x^3y^3 - 2x - 8y)$.

9. $70a^3y^4 - 140a^2y^5 + 210ay^6$
$= 70ay^4(a^2 - 2ay + 3y^2)$.

10. $32a^3b^6 + 96a^6b^8 - 128a^8b^9$
$= 32a^3b^6(1 + 3a^3b^2 - 4a^5b^3)$.

Exercise 28.

1. $x^2 - ax - bx + ab$
$= (x - a)(x - b)$.

2. $ab + ay - by - y^2$
$= (a - y)(b + y)$.

3. $bc + bx - cx - x^2$
$= (b - x)(c + x)$.

4. $mx + mn + ax + an$
$= (m + a)(x + n)$.

5. $cdx^2 - cxy + dxy - y^2$
$= (cx + y)(dx - y)$.

6. $abx - aby + pqx - pqy$
$= (ab + pq)(x - y)$.

7. $cdx^2 + adxy - bcxy - aby^2$
$= (cx + ay)(dx - by)$.

8. $abcy - b^2dy - acdx + bd^2x$
$= (ac - bd)(by - dx)$.

9. $ax - ay - bx + by$
$= (a - b)(x - y)$.

10. $cdz^2 - cyz + dyz - y^2$
$= (cz + y)(dz - y)$.

Exercise 29.

1. $x^2 + 12x + 36$
$= (x + 6)^2$.

2. $x^2 + 28x + 196$
$= (x + 14)^2$.

3. $x^2 + 34x + 289$
$= (x + 17)^2$.

4. $z^2 + 2z + 1$
$= (z + 1)^2$.

5. $y^2 + 200y + 10{,}000$
$= (y + 100)^2$.

6. $z^4 + 14z^2 + 49$
$= (z^2 + 7)^2$.

7. $x^2 + 36xy + 324y^2$
$= (x + 18y)^2$.

8. $y^4 + 16y^2z^2 + 64z^4$
$= (y^2 + 8z^2)^2$.

9. $y^6 + 24y^3 + 144$
$= (y^3 + 12)^2$.

10. $x^2z^2 + 162xz + 6561$
$= (xz + 81)^2$.

11. $4a^2 + 12ab^2 + 9b^4 = (2a + 3b^2)^2$.

12. $9x^2y^4 + 30xy^2z + 25z^2 = (3xy^2 + 5z)^2$.

13. $9x^2 + 12xy + 4y^2 = (3x + 2y)^2$.

14. $4a^4x^2 + 20a^2x^3y + 25x^4y^2 = (2a^2x + 5x^2y)^2$.

Exercise 30.

1. $a^2 - 8a + 16 = (a - 4)^2$.

2. $a^2 - 30a + 225 = (a - 15)^2$.

3. $x^2 - 38x + 361 = (x - 19)^2$.

4. $x^2 - 40x + 400 = (x - 20)^2$.

5. $y^2 - 100y + 2500 = (y - 50)^2$.

6. $y^4 - 20y^2 + 100 = (y^2 - 10)^2$.

7. $y^2 - 50yz + 625z^2 = (y - 25z)^2$.

8. $x^4 - 32x^2y^2 + 256y^4 = (x^2 - 16y^2)^2$.

9. $z^6 - 34z^3 + 289 = (z^3 - 17)^2$.

10. $4x^4y^2 - 20x^2y^3z + 25y^4z^2 = (2x^2y - 5y^2z)^2$.

11. $16x^2y^4 - 8xy^3z^2 + y^2z^4 = (4xy^2 - yz^2)^2$.

12. $9a^2b^2c^2 - 6ab^2c^2d + b^2c^2d^2 = (3abc - bcd)^2$.

13. $16x^6 - 8x^4y^2 + x^2y^4 = (4x^3 - xy^2)^2$.

14. $a^6x^4 - 2a^3bx^2y^4 + b^2y^8 = (a^3x^2 - by^4)^2$.

15. $36x^2y^2 - 60xy^3 + 25y^4 = (6xy - 5y^2)^2$.

16. $1 - 6ab^3 + 9a^2b^6 = (1 - 3ab^3)^2$.

17. $9m^2n^2 - 24mn + 16 = (3mn - 4)^2$.

18. $4b^2x^2 - 12bx^2y + 9x^2y^2 = (2bx - 3xy)^2$.

19. $49a^2 - 112ab + 64b^2 = (7a - 8b)^2$.

20. $64x^4y^6 - 160x^4y^3z + 100x^4z^2 = (8x^2y^3 - 10x^2z)^2$.

21. $49a^2b^2c^2 - 28abcx + 4x^2 = (7abc - 2x)^2$.

22. $121x^4 - 286x^2y + 169y^2 = (11x^2 - 13y)^2$.

23. $289x^2y^2z^2 - 102xy^2z^2d + 9y^2z^2d^2 = (17xyz - 3yzd)^2$.

24. $361x^2y^2z^2 - 76abcxyz + 4a^2b^2c^2 = (19xyz - 2abc)^2$.

Exercise 31.

1. $a^2 - b^2 = (a + b)(a - b)$.

2. $a^2 - 16 = (a + 4)(a - 4)$.

3. $4a^2 - 25 = (2a + 5)(2a - 5)$.

4. $a^4 - b^4 = (a^2 + b^2)(a + b)(a - b)$.

5. $a^4 - 1$
$= (a^2 + 1)(a + 1)(a - 1)$.

6. $a^8 - b^8$
$= (a^4+b^4)(a^2+b^2)(a+b)(a-b)$.

7. $a^8 - 1$
$= (a^4+1)(a^2+1)(a+1)(a-1)$.

8. $36x^2 - 49y^2$
$= (6x + 7y)(6x - 7y)$.

9. $100x^2y^2 - 121a^2b^2$
$= (10xy+11ab)(10xy-11ab)$.

10. $1 - 49x^2$
$= (1 + 7x)(1 - 7x)$.

11. $a^4 - 25b^2$
$= (a^2 + 5b)(a^2 - 5b)$.

12. $(a - b)^2 - c^2$
$= \{(a - b) - c\}\{(a - b) + c\}$
$= (a - b - c)(a - b + c)$.

13. $x^2 - (a - b)^2$
$= \{x - (a - b)\}\{x + (a - b)\}$
$= (x - a + b)(x + a - b)$.

14. $(a + b)^2 - (c + d)^2$
$= [(a + b) + (c + d)][(a + b) - (c + d)]$
$= (a + b + c + d)(a + b - c - d)$.

15. $(x + y)^2 - (x - y)^2$
$= \{(x + y) + (x - y)\}\{(x + y) - (x - y)\}$
$= (x + y + x - y)(x + y - x + y)$
$= 4xy$.

16. $2ab - a^2 - b^2 + 1$
$= 1 - (a^2 - 2ab + b^2)$
$= 1 - (a - b)^2$
$= \{1 + (a - b)\}\{1 - (a - b)\}$
$= (1 + a - b)(1 - a + b)$.

17. $x^2 - 2yz - y^2 - z^2$
$= x^2 - (y^2 + 2yz + z^2)$
$= x^2 - (y + z)^2$
$= \{x + (y + z)\}\{x - (y + z)\}$
$= (x + y + z)(x - y - z)$.

18. $x^2 - 2xy + y^2 - z^2$
$= (x^2 - 2xy + y^2) - z^2$
$= (x - y)^2 - z^2$
$= (x - y + z)(x - y - z)$.

19. $a^2 + 12bc - 4b^2 - 9c^2$
$= a^2 - (4b^2 - 12bc + 9c^2)$
$= a^2 - (2b - 3c)^2$
$= \{a + (2b - 3c)\}\{a - (2b - 3c)\}$
$= (a + 2b - 3c)(a - 2b + 3c)$.

20. $a^2 - 2ay + y^2 - x^2 - 2xz - z^2$
$= (a^2 - 2ay + y^2) - (x^2 + 2xz + z^2)$
$= (a - y)^2 - (x + z)^2$
$= \{(a - y) + (x + z)\}\{(a - y) - (x + z)\}$
$= (a - y + x + z)(a - y - x - z)$.

21. $2xy - x^2 - y^2 + z^2$
$= z^2 - (x^2 - 2xy + y^2)$
$= z^2 - (x - y)^2$
$= \{z + (x - y)\}\{z - (x - y)\}$
$= (z + x - y)(z - x + y)$.

22. $x^2 + y^2 - z^2 - d^2 - 2xy - 2dz$
$= (x^2 - 2xy + y^2) - (d^2 + 2dz + z^2)$
$= (x - y)^2 - (d + z)^2$
$= \{(x - y) - (d + z)\}\{(x - y) + (d + z)\}$
$= (x - y - d - z)(x - y + d + z)$.

23. $x^2 - y^2 + z^2 - a^2 - 2xz + 2ay$
$= (x^2 - 2xz + z^2) - (a^2 - 2ay + y^2)$
$= (x - z)^2 - (a - y)^2$
$= \{(x - z) - (a - y)\}\{(x - z) + (a - y)\}$
$= (x - z - a + y)(x - z + a - y)$.

24. $2ab + a^2 + b^2 - c^2$
$= (a^2 + 2ab + b^2) - c^2$
$= (a + b)^2 - c^2$
$= (a + b + c)(a + b - c).$

25. $2xy - x^2 - y^2 + a^2 + b^2 - 2ab$
$= (a^2 - 2ab + b^2) - (x^2 - 2xy + y^2)$
$= (a - b)^2 - (x - y)^2$
$= \{(a - b) + (x - y)\}\{(a - b) - (x - y)\}$
$= (a - b + x - y)(a - b - x + y).$

26. $(ax + by)^2 - 1$
$= (ax + by + 1)(ax + by - 1).$

27. $1 - x^2 - y^2 + 2xy$
$= 1 - (x^2 - 2xy + y^2)$
$= 1 - (x - y)^2$
$= (1 + x - y)(1 - x + y).$

28. $(5a - 2)^2 - (a - 4)^2$
$= \{(5a - 2) + (a - 4)\}\{(5a - 2) - (a - 4)\}$
$= (5a - 2 + a - 4)(5a - 2 - a + 4)$
$= (6a - 6)(4a + 2).$

29. $a^2 - 2ab + b^2 - x^2$
$= (a - b)^2 - x^2$
$= (a - b + x)(a - b - x)$

30. $(x + 1)^2 - (y + 1)^2$
$= (x + 1 + y + 1)(x + 1 - y - 1)$
$= (x + y + 2)(x - y).$

31. $(x + y)^2 - (y - 1)^2$
$= (x + 1 + y - 1)(x + 1 - y + 1)$
$= (x + y)(x - y + 2).$

32. $d^2 - x^2 + 4xy - 4y^2$
$= d^2 - (x^2 - 4xy + 4y^2)$
$= d^2 - (x - 2y)^2$
$= (d + x - 2y)(d - x + 2y).$

33. $a^2 - b^2 - 2bc - c^2$
$= a^2 - (b^2 + 2bc + c^2)$
$= a^2 - (b + c)^2$
$= (a + b + c)(a - b - c).$

34. $4x^4 - 9x^2 + 6x - 1$
$= 4x^4 - (9x^2 - 6x + 1)$
$= 4x^4 - (3x - 1)^2$
$= (2x^2 + 3x - 1)(2x^2 - 3x + 1).$

EXERCISE 32.

1. $x^4 + x^2y^2 + y^4 = (x^2 + xy + y^2)(x^2 - xy + y^2).$
2. $9x^4 + 3x^2y^2 + 4y^4 = (3x^2 + 3xy + 2y^2)(3x^2 - 3xy + 2y^2).$
3. $16x^4 - 17x^2y^2 + y^4 = (4x^2 + 3xy - y^2)(4x^2 - 3xy - y^2).$
4. $81a^4 + 23a^2b^2 + 16b^4 = (9a^2 + 7ab + 4b^2)(9a^2 - 7ab + 4b^2).$
5. $81a^4 - 28a^2b^2 + 16b^4 = (9a^2 + 10ab + 4b^2)(9a^2 - 10ab + 4b^2).$
6. $9x^4 + 38x^2y^2 + 49y^4 = (3x^2 + 2xy + 7y^2)(3x^2 - 2xy + 7y^2).$
7. $25a^4 - 9a^2b^2 + 16b^4 = (5a^2 + 7ab + 4b^2)(5a^2 - 7ab + 4b^2).$

8. $49m^4 + 110m^2n^2 + 81n^4 = (7m^2 + 4mn + 9n^2)(7m^2 - 4mn + 9n^2)$.

9. $9a^4 + 21a^2c^2 + 25c^4 = (3a^2 + 3ac + 5c^2)(3a^2 - 3ac + 5c^2)$.

10. $49a^4 - 15a^2b^2 + 121b^4 = (7a^2 + 13ab + 11b^2)(7a^2 - 13ab + 11b^2)$.

11. $64x^4 + 128x^2y^2 + 81y^4 = (8x^2 + 4xy + 9y^2)(8x^2 - 4xy + 9y^2)$.

12. $4x^4 - 37x^2y^2 + 9y^4 = (2x^2 + 5xy - 3y^2)(2x^2 - 5xy - 3y^2)$.

13. $25x^4 - 41x^2y^2 + 16y^4 = (5x^2 + xy - 4y^2)(5x^2 - xy - 4y^2)$.

14. $81x^4 - 34x^2y^2 + y^4 = (9x^2 + 4xy - y^2)(9x^2 - 4xy - y^2)$.

EXERCISE 33.

1. $x^2 + 11x + 24$
$= (x + 8)(x + 3)$.

2. $x^2 + 11x + 30$
$= (x + 6)(x + 5)$.

3. $y^2 + 17y + 60$
$= (y + 12)(y + 5)$.

4. $z^2 + 13z + 12$
$= (z + 12)(z + 1)$.

5. $x^2 + 21x + 110$
$= (x + 11)(x + 10)$.

6. $y^2 + 35y + 300$
$= (y + 20)(y + 15)$.

7. $b^2 + 23b + 102$
$= (b + 17)(b + 6)$.

8. $x^2 + 3x + 2$
$= (x + 2)(x + 1)$.

9. $x^2 + 7x + 6$
$= (x + 6)(x + 1)$.

10. $a^2 + 9ab + 8b^2$
$= (a + 8b)(a + b)$.

11. $x^2 + 13ax + 36a^2$
$= (x + 9a)(x + 4a)$.

12. $y^2 + 19py + 48p^2$
$= (y + 16p)(y + 3p)$.

13. $z^2 + 29qz + 100q^2$
$= (z + 25q)(z + 4q)$.

14. $a^4 + 5a^2 + 6$
$= (a^2 + 3)(a^2 + 2)$.

15. $z^6 + 4z^3 + 3$
$= (z^3 + 3)(z^3 + 1)$.

16. $a^2b^2 + 18ab + 32$
$= (ab + 16)(ab + 2)$.

17. $x^8y^4 + 7x^4y^2 + 12$
$= (x^4y^2 + 4)(x^4y^2 + 3)$.

18. $z^{10} + 10z^5 + 16$
$= (z^5 + 8)(z^5 + 2)$.

19. $a^2 + 9ab + 20b^2$
$= (a + 5b)(a + 4b)$.

20. $x^6 + 9x^3 + 20$
$= (x^3 + 5)(x^3 + 4)$.

21. $a^2x^2 + 14abx + 33b^2$
$= (ax + 11b)(ax + 3b)$.

22. $a^2c^2 + 7acx + 10x^2$
$= (ac + 5x)(ac + 2x)$.

23. $x^2y^2z^2 + 19xyz + 48$
$= (xyz + 16)(xyz + 3)$.

24. $b^2c^2 + 18abc + 65a^2$
$= (bc + 13a)(bc + 5a)$.

25. $r^2s^2 + 23rsz + 90z^2$
$= (rs + 18z)(rs + 5z)$.

26. $m^4n^4 + 20m^2n^2pq + 51p^2q^2$
$= (m^2n^2 + 17pq)(m^2n^2 + 3pq)$.

Exercise 34.

1. $x^2 - 7x + 10 = (x-5)(x-2)$.

2. $x^2 - 29x + 190 = (x-19)(x-10)$.

3. $a^2 - 23a + 132 = (a-12)(a-11)$.

4. $b^2 - 30b + 200 = (b-20)(b-10)$.

5. $z^2 - 43z + 460 = (z-23)(z-20)$.

6. $x^2 - 7x + 6 = (x-6)(x-1)$.

7. $x^4 - 4a^2x^2 + 3a^4 = (x^2 - 3a^2)(x^2 - a^2)$.

8. $x^2 - 8x + 12 = (x-6)(x-2)$.

9. $z^2 - 57z + 56 = (z-56)(z-1)$.

10. $y^6 - 7y^3 + 12 = (y^3 - 4)(y^3 - 3)$.

11. $x^2y^2 - 27xy + 26 = (xy - 26)(xy - 1)$.

12. $a^4b^6 - 11a^2b^3 + 30 = (a^2b^3 - 6)(a^2b^3 - 5)$.

13. $a^2b^2c^2 - 13abc + 22 = (abc - 11)(abc - 2)$.

14. $x^2 - 15x + 50 = (x-10)(x-5)$.

15. $x^2 - 20x + 100 = (x-10)(x-10)$.

16. $a^2x^2 - 21ax + 54 = (ax - 18)(ax - 3)$.

17. $a^2x^2 - 16abx + 39b^2 = (ax - 13b)(ax - 3b)$.

18. $a^2c^2 - 24acz + 143z^2 = (ac - 13z)(ac - 11z)$.

19. $x^2 - 20x + 91 = (x-13)(x-7)$.

20. $x^2 - 23x + 120 = (x-15)(x-8)$.

21. $z^2 - 53z + 360 = (z-45)(z-8)$.

22. $x^2 - (a+c)x + ac = (x-a)(x-c)$.

23. $y^2z^2 - 28abyz + 187a^2b^2 = (yz - 17ab)(yz - 11ab)$.

24. $c^2d^2 - 30abcd + 221a^2b^2 = (cd - 17ab)(cd - 13ab)$.

Exercise 35.

1. $x^2 + 6x - 7 = (x+7)(x-1)$.

2. $x^2 + 5x - 84 = (x+12)(x-7)$.

3. $y^2 + 7y - 60 = (y+12)(y-5)$.

4. $y^2 + 12y - 45 = (y+15)(y-3)$.

5. $z^2 + 11z - 12 = (z+12)(z-1)$.

6. $z^2 + 13z - 140 = (z+20)(z-7)$.

7. $a^2 + 13a - 300 = (a+25)(a-12)$.

8. $a^2 + 25a - 150 = (a+30)(a-5)$.

9. $b^8 + 3b^4 - 4$
$= (b^4 + 4)(b^4 - 1)$.

10. $b^2c^2 + 3bc - 154$
$= (bc + 14)(bc - 11)$.

11. $c^{10} + 15c^5 - 100$
$= (c^5 + 20)(c^5 - 5)$.

12. $c^2 + 17c - 390$
$= (c + 30)(c - 13)$.

13. $a^2 + a - 132$
$= (a + 12)(a - 11)$.

14. $x^2y^2z^2 + 9xyz - 22$
$= (xyz + 11)(xyz - 2)$.

Exercise 36.

1. $x^2 - 3x - 28$
$= (x - 7)(x + 4)$.

2. $y^2 - 7y - 18$
$= (y - 9)(y + 2)$.

3. $x^2 - 9x - 36$
$= (x - 12)(x + 3)$.

4. $z^2 - 11z - 60$
$= (z - 15)(z + 4)$.

5. $z^2 - 13z - 14$
$= (z - 14)(z + 1)$.

6. $a^2 - 15a - 100$
$= (a - 20)(a + 5)$.

7. $c^{10} - 9c^5 - 10$
$= (c^5 - 10)(c^5 + 1)$.

8. $x^2 - 8x - 20$
$= (x - 10)(x + 2)$.

9. $y^2 - 5ay - 50a^2$
$= (y - 10a)(y + 5a)$.

10. $a^2b^2 - 3ab - 4$
$= (ab - 4)(ab + 1)$.

11. $a^2x^2 - 3ax - 54$
$= (ax - 9)(ax + 6)$.

12. $c^2d^2 - 24cd - 180$
$= (cd - 30)(cd + 6)$.

13. $a^6c^2 - a^3c - 2$
$= (a^3c - 2)(a^3c + 1)$.

14. $y^8z^4 - 5y^4z^2 - 84$
$= (y^4z^2 - 12)(y^4z^2 + 7)$.

15. $a^2b^2 - 16ab - 36$
$= (ab - 18)(ab + 2)$.

16. $x^2 - (a - b)x - ab$
$= (x - a)(x + b)$.

Exercise 37.

1. $12x^2 - 5x - 2$
$= (4x + 1)(3x - 2)$.

2. $12x^2 - 7x + 1$
$= (3x - 1)(4x - 1)$.

3. $12x^2 - x - 1$
$= (4x + 1)(3x - 1)$.

4. $3x^2 - 2x - 5$
$= (x + 1)(3x - 5)$.

5. $3x^2 + 4x - 4$
$= (x + 2)(3x - 2)$.

6. $6x^2 + 5x - 4$
$= (3x + 4)(2x - 1)$.

7. $4x^2 + 13x + 3$
$= (4x + 1)(x + 3)$.

8. $4x^2 + 11x - 3$
$= (x + 3)(4x - 1)$.

9. $4x^2 - 4x - 3$
$= (2x + 1)(2x - 3)$.

10. $x^2 - 3ax + 2a^2$
$= (x - a)(x - 2a)$.

Exercise 23.

1. $(x+2)(x+3) = x^2 + 5x + 6.$
2. $(x+1)(x+5) = x^2 + 6x + 5.$
3. $(x-3)(x-6) = x^2 - 9x + 18.$
4. $(x-8)(x-1) = x^2 - 9x + 8.$
5. $(x-8)(x+1) = x^2 - 7x - 8.$
6. $(x-2)(x+5) = x^2 + 3x - 10.$
7. $(x-3)(x+7) = x^2 + 4x - 21.$
8. $(x-2)(x-4) = x^2 - 6x + 8.$
9. $(x+1)(x+11) = x^2 + 12x + 11.$
10. $(x-2a)(x+3a) = x^2 + ax - 6a^2.$
11. $(x-c)(x-d) = x^2 - (c+d)x + cd.$
12. $(x-4y)(x+y) = x^2 - 3xy - 4y^2.$
13. $(a-2b)(a-5b) = a^2 - 7ab + 10b^2.$
14. $(x^2 + 2y^2)(x^2 + y^2) = x^4 + 3x^2y^2 + 2y^4.$
15. $(x^2 - 3xy)(x^2 + xy) = x^4 - 2x^3y - 3x^2y^2.$
16. $(ax - 9)(ax + 6) = a^2x^2 - 3ax - 54.$
17. $(x+a)(x-b) = x^2 + (a-b)x - ab.$
18. $(x-11)(x+4) = x^2 - 7x - 44.$
19. $(x+12)(x-11) = x^2 + x - 132.$
20. $(x-10)(x-5) = x^2 - 15x + 50.$

Exercise 24.

1. $\dfrac{1-4x^2}{1-2x} = 1 + 2x.$
2. $\dfrac{1-4x^2}{1+2x} = 1 - 2x.$
3. $\dfrac{9a^2-b^2}{3a+b} = 3a - b.$
4. $\dfrac{9a^2-b^2}{3a-b} = 3a + b.$
5. $\dfrac{16a^2-9b^2}{4a+3b} = 4a - 3b.$
6. $\dfrac{1-9z^2}{1-3z} = 1 + 3z.$
7. $\dfrac{a^2b^2-c^2}{ab+c} = ab - c.$
8. $\dfrac{4x^2-16y^2}{2x+4y} = 2x - 4y.$
9. $\dfrac{49-4a^2}{7-2a} = 7 + 2a.$
10. $\dfrac{x^2-81y^2}{x+9y} = x - 9y.$
11. $\dfrac{1-(x-y)^2}{1+(x-y)} = 1 - x + y.$
12. $\dfrac{a^2-(b+c)^2}{a+(b+c)} = a - b - c.$

13. $\frac{(x+y)^2-25}{(x+y)-5} = x+y+5.$

14. $\frac{1-(a-5b)^2}{1+(a-5b)} = 1-a+5b.$

15. $\frac{64-(2b+3c)^2}{8-(2b+3c)} = 8+2b+3c.$

16. $\frac{(a-b)^2-(c-d)^2}{(a-b)+(c-d)} = a-b-c+d.$

Exercise 25.

1. $(y^3-1)\div(y-1) = y^2+y+1.$

2. $(b^3-125)\div(b-5) = b^2+5b+25.$

3. $(a^3-216)\div(a-6) = a^2+6a+36.$

4. $(x^3-343)\div(x-7) = x^2+7x+49.$

5. $(1-8x^3)\div(1-2x) = 1+2x+4x^2.$

6. $(8a^3x^3-1)\div(2ax-1) = 4a^2x^2+2ax+1.$

7. $(1-27x^3y^3)\div(1-3xy) = 1+3xy+9x^2y^2.$

8. $(64a^3b^3-27x^3)\div(4ab-3x) = 16a^2b^2+12abx+9x^2.$

9. $(x^3+y^3)\div(x+y) = x^2-xy+y^2.$

10. $(1+8a^3)\div(1+2a) = 1-2a+4a^2.$

11. $(27a^3+b^3)\div(3a+b) = 9a^2-3ab+b^2.$

12. $(8a^3x^3+1)\div(2ax+1) = 4a^2x^2-2ax+1.$

13. $(x^3+27y^3)\div(x+3y) = x^2-3xy+9y^2.$

14. $(512x^3y^3+z^3)\div(8xy+z) = 64x^2y^2-8xyz+z^2.$

15. $(729a^3+216b^3)\div(9a+6b) = 81a^2-54ab+36b^2.$

16. $(64a^3+1000b^3)\div(4a+10b) = 16a^2-40ab+100b^2.$

17. $(64a^3b^3+27x^3)\div(4ab+3x) = 16a^2b^2-12abx+9x^2.$

18. $(x^3+343)\div(x+7) = x^2-7x+49.$

19. $(27x^3y^3+8z^3)\div(3xy+2z) = 9x^2y^2-6xyz+4z^2.$

Exercise 26.

1. $(x^4 - y^4) \div (x - y)$
$= x^3 + x^2y + xy^2 + y^3.$

2. $(x^4 - y^4) \div (x + y)$
$= x^3 - x^2y + xy^2 - y^3.$

3. $(a^6 - x^6) \div (a - x)$
$= a^5 + a^4x + a^3x^2 + a^2x^3 + ax^4 + x^5.$

4. $(a^6 - x^6) \div (a + x)$
$= a^5 - a^4x + a^3x^2 - a^2x^3 + ax^4 - x^5.$

5. $(81\,a^4x^4 - 1) \div (3\,ax - 1)$
$= 27\,a^3x^3 + 9\,a^2x^2 + 3\,ax + 1.$

6. $(64\,a^6 - b^6) \div (2\,a - b)$
$= 32\,a^5 + 16\,a^4b + 8\,a^3b^2 + 4\,a^2b^3 + 2\,ab^4 + b^5.$

7. $(a^5 + 32\,b^5) \div (a + 2\,b)$
$= a^4 - 2\,a^3b + 4\,a^2b^2 - 8\,ab^3 + 16\,b^4.$

8. $(a^5 - 32\,b^5) \div (a - 2\,b)$
$= a^4 + 2\,a^3b + 4\,a^2b^2 + 8\,ab^3 + 16\,b^4.$

9. $(1 - 243\,a^5) \div (1 - 3\,a)$
$= 1 + 3\,a + 9\,a^2 + 27\,a^3 + 81\,a^4.$

10. $(243\,a^5 + 1) \div (3\,a + 1)$
$= 81\,a^4 - 27\,a^3 + 9\,a^2 - 3\,a + 1.$

11. $(x^7 - y^7) \div (x - y)$
$= x^6 + x^5y + x^4y^2 + x^3y^3 + x^2y^4 + xy^5 + y^6.$

12. $(a^{10} - 1024) \div (a + 2)$
$= a^9 - 2\,a^8 + 4\,a^7 - 8\,a^6 + 16\,a^5 - 32\,a^4 + 64\,a^3$
$- 128\,a^2 + 256\,a - 512.$

Exercise 27.

1. $5a^2 - 15a$
$= 5a(a - 3)$.

2. $6a^3 + 18a^2 - 12a$
$= 6a(a^2 + 3a - 2)$.

3. $49x^2 - 21x + 14$
$= 7(7x^2 - 3x + 2)$.

4. $4x^2y - 12x^2y^2 + 8xy^3$
$= 4xy(x^2 - 3xy + 2y^2)$.

5. $y^4 - ay^3 + by^2 + cy$
$= y(y^3 - ay^2 + by + c)$.

6. $6a^5b^3 - 21a^4b^3 + 27a^3b^4$
$= 3a^3b^3(2a^2b - 7a + 9b^3)$.

7. $54x^2y^6 + 108x^4y^8 - 243x^6y^9$
$= 27x^2y^6(2 + 4x^2y^2 - 9x^4y^3)$.

8. $45x^7y^{10} - 90x^5y^7 - 360x^4y^8$
$= 45x^4y^7(x^3y^3 - 2x - 8y)$.

9. $70a^3y^4 - 140a^2y^5 + 210ay^6$
$= 70ay^4(a^2 - 2ay + 3y^2)$.

10. $32a^3b^6 + 96a^6b^8 - 128a^8b^9$
$= 32a^3b^6(1 + 3a^3b^2 - 4a^5b^3)$.

Exercise 28.

1. $x^2 - ax - bx + ab$
$= (x - a)(x - b)$.

2. $ab + ay - by - y^2$
$= (a - y)(b + y)$.

3. $bc + bx - cx - x^2$
$= (b - x)(c + x)$.

4. $mx + mn + ax + an$
$= (m + a)(x + n)$.

5. $cdx^2 - cxy + dxy - y^2$
$= (cx + y)(dx - y)$.

6. $abx - aby + pqx - pqy$
$= (ab + pq)(x - y)$.

7. $cdx^2 + adxy - bcxy - aby^2$
$= (cx + ay)(dx - by)$.

8. $abcy - b^2dy - acdx + bd^2x$
$= (ac - bd)(by - dx)$.

9. $ax - ay - bx + by$
$= (a - b)(x - y)$.

10. $cdz^2 - cyz + dyz - y^2$
$= (cz + y)(dz - y)$.

Exercise 29.

1. $x^2 + 12x + 36$
$= (x + 6)^2$.

2. $x^2 + 28x + 196$
$= (x + 14)^2$.

3. $x^2 + 34x + 289$
$= (x + 17)^2$.

4. $z^2 + 2z + 1$
$= (z + 1)^2$.

5. $y^2 + 200y + 10{,}000$
$= (y + 100)^2$.

6. $z^4 + 14z^2 + 49$
$= (z^2 + 7)^2$.

7. $x^2 + 36xy + 324y^2$
$= (x + 18y)^2$.

8. $y^4 + 16y^2z^2 + 64z^4$
$= (y^2 + 8z^2)^2$.

9. $y^6 + 24y^3 + 144$
$= (y^3 + 12)^2$.

10. $x^2z^2 + 162xz + 6561$
$= (xz + 81)^2$.

14.

$12x^3 - 9x^2 + 5x + 2$ | $24x^2 + 10x + 1$ | $x + 7$
2 | $24x^2 + 6x$ | $6x + 1$
$24x^3 - 18x^2 + 10x + 4$ | $4x + 1$
$24x^3 + 10x^2 + x$ | $4x + 1$
$-28x^2 + 9x + 4$
-6
$168x^2 - 54x - 24$
$168x^2 + 70x + 7$
$-31) -124x - 31$
$4x + 1$

$\therefore$ H.C.F. $= 4x + 1$.

15.

$3) 6x^3 + 15x^2 - 6x + 9$ | $3) 9x^3 + 6x^2 - 51x + 36$ | Reserve 3.
$2x^3 + 5x^2 - 2x + 3$ | $3x^3 + 2x^2 - 17x + 12$
11 | 2
$22x^3 + 55x^2 - 22x + 33$ | $6x^3 + 4x^2 - 34x + 24$ | 3
$22x^3 + 56x^2 - 30x$ | $6x^3 + 15x^2 - 6x + 9$
$-x^2 + 8x + 33$ | $-11x^2 - 28x + 15$ | $-2x$
$-x^2 - 3x$ | $-11x^2 + 88x + 363$ | 11
$11x + 33$ | $-116) -116x - 348$
$11x + 33$ | $x + 3$ | $-x + 11$

$\therefore$ H.C.F. $= 3(x + 3)$.

16.

$4x^3 - x^2y - xy^2 - 5y^3$ | $7x^3 + 4x^2y + 4xy^2 - 3y^3$
$4x^3 + 4x^2y + 4xy^2$ | 4
$-5x^2y - 5xy^2 - 5y^3$ | $28x^3 + 16x^2y + 16xy^2 - 12y^3$ | 7
$-5x^2y - 5xy^2 - 5y^3$ | $28x^3 - 7x^2y - 7xy^2 - 35y^3$
$23y) 23x^2y + 23xy^2 + 23y^3$
$x^2 + xy + y^2$ | $4x - 5y$

$\therefore$ H.C.F. $= x^2 + xy + y^2$.

17.

$2a^3 - 2a^2 - 3a - 2$ | $3a^3 - a^2 - 2a - 16$
2 | 2
$4a^3 - 4a^2 - 6a - 4$ | $6a^3 - 2a^2 - 4a - 32$ | 3
$4a^3 + 5a^2 - 26a$ | $6a^3 - 6a^2 - 9a - 6$
$-9a^2 + 20a - 4$ | $4a^2 + 5a - 26$ | a
4 | $4a^2 - 8a$ | -9
$-36a^2 + 80a - 16$ | $13a - 26$
$-36a^2 - 45a + 234$ | $13a - 26$ | $4a + 13$
$125) 125a - 250$
$a - 2$

$\therefore$ H.C.F. $= a - 2$.

18.

$2)12y^3+2y^2-94y-60$

$6y^3+y^2-47y-30$

8

$48y^3+8y^2-376y-240$

$48y^3-42y^2-405y$

$50y^2+29y-240$

8

$400y^2+232y-1920$

$400y^2-350y-3375$

$291)582y+1455$

$2y+5$

$2)48y^3-24y^2-348y+30$ | Reserve 2.

$24y^3-12y^2-174y+15$ | 4

$24y^3+4y^2-188y-120$

$-16y^2+14y+135$ | $-3y-25$

$-16y^2-40y$

$54y+135$ | $-8y+27$

$54y+135$

$\therefore$ H.C.F. $= 2(2y+5)$.

19.

$9x(2x^4-6x^3-x^2+15x-10)$

$2x^4-6x^3-x^2+15x-10$

9

$18x^4-54x^3-9x^2+135x-90$

$18x^4-2x^3-45x^2+5x$

$2)-52x^3+36x^2+130x-90$

$-26x^3+18x^2+65x-45$

9

$-234x^3+162x^2+585x-405$

$-234x^3+26x^2+585x-65$

$68)136x^2-340$

$2x^2-5$

$6x^2(4x^4+6x^3-4x^2-15x-15)$ | Reserve $3x$.

$4x^4+6x^3-4x^2-15x-15$ | 2

$4x^4-12x^3-2x^2+30x-20$

$18x^3-2x^2-45x+5$ | $x-13$

$18x^3-45x$ | $9x-1$

$-2x^2+5$

$-2x^2+5$

$\therefore$ H.C.F. $= 3x(2x^2-5)$.

20.

$15x^4+2x^3-75x^2+5x+2$

$15x^4-75x^2+15x$

$2x^3-10x+2$

$2x^3-10x+2$

$\therefore$ H.C.F. $= x^3-5x+1$.

$35x^4+x^3-175x^2+30x+1$ | 3

$105x^4+3x^3-525x^2+90x+3$ | 7

$105x^4+14x^3-525x^2+35x+14$

$-11)-11x^3+55x-11$ | $15x+2$

x^3-5x+1

21.

$21x^3-32x^2-54x-7$ | 5

$105x^3-160x^2-270x-35$

$105x^3+99x^2+12x$

$-259x^2-282x-35$ | 5

$-1295x^3-1410x-175$

$-1295x^2-1221x-148$

$-27)-189x-27$

$7x+1$

$\therefore$ H.C.F. $= 7x+1$.

$21x^4-4x^3-15x^2-2x$ | x

$21x^4-32x^3-54x^2-7x$

$28x^3+39x^2+5x$ | 3

$84x^3+117x^2+15x$ | 4

$84x^3-128x^2-216x-28$

$7)245x^2+231x+28$

$35x^2+33x+4$ | $3x-37$

$35x^2+5x$

$28x+4$ | $5x+4$

$28x+4$

22.

$$
\begin{array}{l|l}
y)\,9x^4y-22x^3y^2-3xy^4+10y^5 & xy)\,9x^5y-6x^4y^2+x^3y^3-25xy^5 \quad \text{Res. } y.\\
\quad 9x^4-22x^3y^2-3xy^3+10y^4 & \quad 9x^4-6x^3y+x^2y^2\qquad -25y^4 \quad 1\\
\quad 2 & \quad 9x^4\quad -22x^3y^2-3xy^3+10y^4\\
\hline
\quad 18x^4-44x^3y^2-\quad 6xy^3+20y^4 & -y)-6x^3y+23x^2y^2+3xy^3-35y^4\\
\quad 18x^4-\ 9x^3y^2+105xy^3-69x^2y & \quad\ 6x^3\ -23x^2y\ -3xy^2+35y^3 \quad 3x\\
\hline
y)69x^3y-35x^2y^2-111xy^3+20y^4 & \quad\ 6x^3\ -\ 2x^2y\ -10xy^2 \quad 23\\
\quad 69x^3\ -35x^2y\ -111xy^2+20y^3 & -7y)-21x^2y\ +7xy^2+35y^3 \quad 2x\\
\quad 2 & \qquad\ 3x^2\ -\ xy\ -\ 5y^2 \quad 1\\
\hline
138x^3-\ 70x^2y-222xy^2+\ 40y^3 & \qquad\ 3x^2\ -\ xy\ -\ 5y^2\\
138x^3-529x^2y-\ 69xy^2+805y^3 & \\
\hline
153y)459x^2y-153xy^2-765y^3 & \\
\qquad 3x^2\ -\ \ xy\ -\ \ 5y^2 &
\end{array}
$$

$\therefore$ H.C.F. $= y(3x^2-xy-5y^2)$.

23.

$$
\begin{array}{l|l}
4x^4+2x^3-18x^2+3x-5 & 6x^5-4x^4-11x^3-\ 3x^2-\ 3x-1\\
4x^4-8x^3+\ 2x^2-\ 2x & \quad 2\\
\hline
\quad 10x^3-20x^2+5x-5 & 12x^5-8x^4-22x^3-\ 6x^2-\ 6x-2 \quad 3x\\
\quad 10x^3-20x^2+5x-5 & 12x^5+6x^4-54x^3+\ 9x^2-15x\\
\hline
 & \quad -14x^4+32x^3-15x^2+\ 9x-2\\
 & \qquad\ 2\\
 & \hline
 & -28x^4+64x^3-\ 30x^2+18x-\ 4 \quad -7\\
 & -28x^4-14x^3+126x^2-21x+35\\
 & \hline
 & \qquad 39)78x^3-156x^2+39x-39\\
 & \qquad\qquad 2x^3-\ \ 4x^2+\ \ x-\ 1 \quad 2x+5
\end{array}
$$

$\therefore$ H.C.F. $= 2x^3-4x^2+x-1$.

24.

$$
\begin{array}{l|l}
3x^3-7ax^2+3a^2x-2a^3 & x^4-\ ax^3-\ a^2x^2-\ a^3x-2a^4\\
2 & 3\\
\hline
6x^3-14ax^2+\ 6a^2x-4a^3 & 3x^4-3ax^3-3a^2x^2-3a^3x-6a^4 \quad x\\
6x^3-\ 9ax^2-\ 6a^2x & 3x^4-7ax^3+3a^2x^2-2a^3x\\
\hline
-a)-5ax^2+12a^2x-4a^3 & \quad 4ax^3-6a^2x^2-\ a^3x-6a^4\\
\quad 5x^2-12ax\ +4a^2 & \quad 3\\
\quad 2 & \hline
\hline
\quad 10x^2-24ax+\ 8a^2 & 12ax^3-18a^2x^2-\ 3a^3x-18a^4 \quad 4a\\
\quad 10x\ -15ax-10a^2 & 12ax^3-28a^2x^2+12a^3x-\ 8a^4\\
\hline
\quad -9a)-9ax+18a^2 & \quad 5a^2)10a^2x^2-15a^3x-10a^4\\
\qquad\ x-\ 2a & \qquad\ 2x^2-\ 3ax-\ 2a^2 \quad 3x\\
 & \qquad\ 2x^2-\ 4ax \quad 5\\
 & \hline
 & \qquad\qquad\ ax-\ 2a^2 \quad 2x+a\\
 & \qquad\qquad\ ax-\ 2a^2\\
 & \hline
\end{array}
$$

$\therefore$ H.C.F. $= x-2a$.

EXERCISE 43.

1. $2x^2+x-1=(x+1)(2x-1)$,
$x^2+5x+4=(x+1)(x+4)$,
$x^3+1=(x+1)(x^2-x+1)$.
$\therefore$ H.C.F. $= x+1$.

2. $y^3-y^2-y+1=y^2(y-1)-(y-1)$
$=(y^2-1)(y-1)$,
$3y^2-2y-1=(y-1)(3y+1)$,
$y^3-y^2+y-1=y^2(y-1)+(y-1)$
$=(y^2+1)(y-1)$.
$\therefore$ H.C.F. $= y-1$.

3.

$x^3-4x^2+9x-10$	$x^3+2x^2-3x+20$	1
x^3-2x^2+5x	$x^3-4x^3+9x-10$	
$-2x^2+4x-10$	$6)6x^2-12x+30$	
$-2x^2+4x-10$	x^2-2x+5	$x-2$
x^2-2x+5	$x^3+5x^2-9x+35$	$x+7$
	x^3-2x^2+5x	
	$7x^2-14x+35$	
$\therefore$ H.C.F. $= x^2-2x+5$.	$7x^2-14x+35$	

4.

$x^3-7x^2+16x-12$	$3x^3-14x^2+16x$	3
7	$3x^3-21x^2+48x-36$	
$7x^3-49x^2+112x-84$	$7x^2-32x+36$	$x-17$
$7x^3-32x^2+36x$	$7x^2-14x$	
$-17x^2+76x-84$	$-18x+36$	$7x-18$
7	$-18x+36$	
$-119x^2+532x-588$		
$-119x^2+544x-612$		
$-12)-12x+24$		
$x-2$	$5x^3-10x^2+7x-14$	$5x^2+7$
	$5x^3-10x^2$	
	$7x-14$	
$\therefore$ H.C.F. $= x-2$.	$7x-14$	

5.

$y^3-5y^2+11y-15$	y^3-y^2+3y+5	1
y^3-y^2+3y+5	y^3-2y^2+5y	$y+1$
$-4)-4y^2+8y-20$	y^2-2y+5	
y^2-2y+5	y^2-2y+5	
y^2-2y+5	$2y^3-7y^2+16y-15$	$2y-3$
	$2y^3-4y^2+10y$	
	$-3y^2+6y-15$	
$\therefore$ H.C.F. $=y^2-2y+5$.	$-3y^2+6y-15$	

6. $2x^2+3x-5=(2x+5)(x-1)$.
$3x^2-x-2=(3x+2)(x-1)$,
$2x^2+x-3=(2x+3)(x-1)$.
$\therefore$ H.C.F. $=x-1$.

7.

x^3-1	x^3-x^2-x-2	1
x^3+x^2+x	$x^3\qquad -1$	
$-x^2-x-1$	$-x^2-x-1$	$-x+1$
$-x^2-x-1$		
x^2+x+1	$2x^3-x^2-x-3$	$2x-3$
	$2x^3+2x^2+2x$	
	$-3x^2-3x-3$	
	$-3x^2-3x-3$	

$\therefore$ H.C.F. $=x^2+x+1$.

8.

$x^3-3x\quad -2$	$2x^3+3x^2\quad -1$	2
x^3+2x^2+x	$2x^3\quad -6x-4$	
$-2x^2-4x-2$	$3)3x^2+6x+3$	
$-2x^2-4x-2$	x^2+2x+1	$x-2$
x^2+2x+1	x^3+1	$x-2$
x^2+x	x^3+2x^2+x	
$x+1$	$-2x^2-x+1$	
$x+1$	$-2x^2-4x-2$	
	$3)3x+3$	
	$x+1$	$x+1$

$\therefore$ H.C.F. $=x+1$.

9. $12(x^4-y^4)=12(x^2+y^2)(x^2-y^2)$
$=12(x^2+y^2)(x+y)(x-y)$;
$10(x^6-y^6)=10(x^3+y^3)(x^3-y^3)$
$=10(x+y)(x^3-xy+y^2)(x-y)(x^2+xy+y^2)$;
$8(x^4y+xy^4)=8xy(x^3+y^3)$
$=8xy(x+y)(x^2-xy+y^2)$.
$\therefore$ H.C.F. $=2(x+y)$.

10. $x^4+xy^3=x(x^3+y^3)$
$=x(x+y)(x^2-xy+y^2)$;
$x^3y+y^4=y(x^3+y^3)$
$=y(x+y)(x^2-xy+y^2)$;
$x^4+x^2y^2+y^4=(x^4+2x^2y^2+y^4)-x^2y^2$
$=(x^2+y^2)^2-x^2y^2$
$=(x^2+xy+y^2)(x^2-xy+y^2)$.
$\therefore$ H.C.F. $=x^2-xy+y^2$.

11. $2(x^2y - xy^2) = 2xy(x-y)$,
$3(x^3y - xy^3) = 3xy(x+y)(x-y)$,
$4(x^4y - xy^4) = 4xy(x-y)(x^2+xy+y^2)$,
$5(x^5y - xy^5) = 5xy(x+y)(x-y)(x^2+y^2)$.
$\therefore$ H. C. F. $= xy(x-y)$.

Exercise 44.

1. $4a^3x = 2^2 \times a^3 \times x$,
$6a^2x^2 = 3 \times 2 \times a^2 \times x^2$,
$2ax^2 = 2 \times a \times x^2$.
$\therefore$ L. C. M. $= 12a^3x^2$.

2. $18ax^2 = 3^2 \times 2 \times a \times x^2$,
$72ay^2 = 3^2 \times 2^3 \times a \times y^2$,
$12xy = 3 \times 2^2 \times x \times y$.
$\therefore$ L. C. M. $= 72ax^2y^2$.

3. $x^2 = x \times x$,
$ax + x^2 = x(a+x)$.
$\therefore$ L. C. M. $= x^2(a+x)$.

4. $x^2 - 1 = (x+1)(x-1)$,
$(x^2 - x) = x(x-1)$.
$\therefore$ L. C. M. $= x(x+1)(x-1)$.

5. $a^2 - b^2 = (a+b)(a-b)$,
$a^2 + ab = a(a+b)$.
$\therefore$ L. C. M. $= a(a+b)(a-b)$.

6. $2x - 1 = 2x - 1$,
$4x^2 - 1 = (2x+1)(2x-1)$.
$\therefore$ L. C. M. $= (2x+1)(2x-1)$.

7. $a + b = a + b$,
$a^3 + b^3 = (a+b)(a^2 - ab + b^2)$.
$\therefore$ L. C. M. $= (a+b)(a^2 - ab + b^2)$.

8. $x^2 - 1 = (x+1)(x-1)$,
$x^2 + 1 = x^2 + 1$,
$x^4 - 1 = (x^2+1)(x+1)(x-1)$.
$\therefore$ L. C. M. $= (x^2+1)(x+1)(x-1)$.

9. $x^2 - x = x(x-1)$,
$x^3 - 1 = (x-1)(x^2+x+1)$,
$x^3 + 1 = (x+1)(x^2-x+1)$.
$\therefore$ L. C. M. $= x(x^3+1)(x^3-1)$.

10. $x^3 - 1 = (x+1)(x-1)$,
$x^3 - x = x(x+1)$,
$x^3 - 1 = (x-1)(x^2+x+1)$.
$\therefore$ L. C. M. $= x(x+1)(x^3-1)$.

11. $2a + 1 = 2a + 1$,
$4a^2 - 1 = (2a+1)(2a-1)$,
$8a^3 + 1 = (2a+1)(4a^2-2a+1)$.
$\therefore$ L. C. M. $= (8a^3+1)(2a-1)$.

12. $(a+b)^2 = (a+b)^2$,
$(a^2 - b^2) = (a+b)(a-b)$.
$\therefore$ L. C. M. $= (a+b)^2(a-b)$.

13. $4(1+x) = 4(1+x)$,
$4(1-x) = 4(1-x)$,
$2(1-x^2) = 2(1+x)(1-x)$.
$\therefore$ L. C. M. $= 4(1+x)(1-x)$.

14. $x - 1 = x - 1$,
$x^2 + x + 1 = x^2 + x + 1$,
$x^3 - 1 = (x-1)(x^2+x+1)$.
$\therefore$ L. C. M. $= x^3 - 1$.

15. $x^2 - y^2 = (x+y)(x-y)$,
$(x+y)^2 = (x+y)^2$,
$(x-y)^2 = (x-y)^2$.
$\therefore$ L. C. M. $= (x+y)^2(x-y)^2$.

16. $x^2 - y^2 = (x+y)(x-y)$,
$3(x-y)^2 = 3(x-y)^2$,
$12(x^3+y^3) = 12(x+y)(x^2-xy+y^2)$.
$\therefore$ L. C. M. $= 12(x^3+y^3)(x-y)^2$.

17. $6(x^2 + xy) = 6x(x+y)$,
$8(xy - y^2) = 8y(x-y)$,
$10(x^2-y^2) = 10(x+y)(x-y)$.
$\therefore$ L. C. M. $= 120xy(x+y)(x-y)$.

18. $x^2+5x+6=(x+3)(x+2)$,
$x^2+6x+8=(x+2)(x+4)$.
$\therefore$ L. C. M. $=(x+2)(x+3)(x+4)$.

19. $a^2-a-20=(a-5)(a+4)$,
$a^2+a-12=(a+4)(a-3)$.
$\therefore$ L. C. M. $=(a-3)(a+4)(a-5)$.

20. $x^2+11x+30=(x+6)(x+5)$,
$x^2+12x+35=(x+5)(x+7)$.
$\therefore$ L. C. M. $=(x+5)(x+6)(x+7)$.

21. $x^2-9x-22=(x+2)(x-11)$,
$x^2-13x+22=(x-2)(x-11)$.
$\therefore$ L. C. M. $=(x+2)(x-2)(x-11)$.

22. $4ab(a^2-3ab+2b^2)=4ab(a-2b)(a-b)$,
$5a^2(a^2+ab-6b^2)=5a^2(a+3b)(a-2b)$.
$\therefore$ L. C. M. $=20a^2b(a-b)(a-2b)(a+3b)$.

23. $20(x^2-1)=20(x+1)(x-1)$,
$24(x^2-x-2)=24(x-2)(x+1)$,
$16(x^2+x-2)=16(x+2)(x-1)$.
$\therefore$ L.C.M. $=240(x+1)(x-1)(x+2)(x-2)$.

24. $12xy(x^2-y^2)=12xy(x+y)(x-y)$,
$2x^2(x+y)^2=2x^2(x+y)(x+y)$,
$3y^2(x-y)^2=3y^2(x-y)(x-y)$.
$\therefore$ L. C. M. $=12x^2y^2(x-y)^2(x+y)^2$.

25. $(a-b)(b-c)=(a-b)(b-c)$,
$(b-c)(c-a)=-(a-c)(b-c)$,
$(c-a)(a-b)=-(a-b)(a-c)$.
$\therefore$ L. C. M. $=(a-b)(b-c)(c-a)$.

26. $(a-b)(a-c)=(a-b)(a-c)$,
$(b-a)(b-c)=-(a-b)(b-c)$,
$(c-a)(c-b)=(a-c)(b-c)$.
$\therefore$ L.C.M. $=(a-b)(a-c)(b-c)$.

27. $x^3-4x^2+3x=x(x^3-4x+3)$
$=x(x-3)(x-1)$,
$x^4+x^3-12x^2=x^2(x^2+x-12)$
$=x^2(x+4)(x-3)$,
$x^5+3x^4-4x^3=x^3(x^2+3x-4)$
$=x^3(x-1)(x+4)$.
$\therefore$ L. C. M. $=x^3(x-1)(x-3)(x+4)$.

28. $x^2y-xy^2=xy(x-y)$,
$3x(x-y)^2=3x(x-y)^2$,
$4y(x-y)^3=4y(x-y)^3$.
$\therefore$ L. C. M. $=12xy(x-y)^3$.

29. $(a+b)^2-(c+d)^2=(a+b+c+d)(a+b-c-d)$,
$(a+c)^2-(b+d)^2=(a+b+c+d)(a-b+c-d)$,
$(a+d)^2-(b+c)^2=(a+b+c+d)(a-b-c+d)$.
$\therefore$ L. C. M. $=(a+b+c+d)(a+b-c-d)(a-b+c-d)(a-b-c+d)$.

30. $(2x-4)(3x-6)=2(x-2)\times 3(x-2)$,
$(x-3)(4x-8)=(x-3)\times 4(x-2)$,
$(2x-6)(5x-10)=2(x-3)\times 5(x-2)$.
$\therefore$ L. C. M. $=60(x-2)^2(x-3)$.

Exercise 45.

1. $6x^2 - x - 2 = (3x - 2)(2x + 1)$,
$21x^2 - 17x + 2 = (3x - 2)(7x - 1)$,
$14x^2 + 5x - 1 = (2x + 1)(7x - 1)$.

$\therefore$ L.C.M. $= (3x - 2)(2x + 1)(7x - 1)$.

2. $x^2 - 1 = (x + 1)(x - 1)$,
$x^2 + 2x - 3 = (x + 3)(x - 1)$,
$6x^2 - x - 2 = (3x - 2)(2x + 1)$.

$\therefore$ L.C.M. $= (2x + 1)(3x - 2)(x - 1)(x + 1)(x + 3)$

3. $x^3 - 27 = (x - 3)(x^2 + 3x + 9)$,
$x^2 - 15x + 36 = (x - 3)(x - 12)$,
$x^3 - 3x^2 - 2x + 6 = x^2(x - 3) - 2(x - 3)$
$= (x^2 - 2)(x - 3)$.

$\therefore$ L.C.M. $= (x - 3)(x - 12)(x^2 - 2)(x^2 + 3x + 9)$.

4. $5x^2 + 19x - 4 = (5x - 1)(x + 4)$,
$10x^2 + 13x - 3 = (5x - 1)(2x + 3)$.

$\therefore$ L.C.M. $= (5x - 1)(x + 4)(2x + 3)$.

5. $12x^2 + xy - 6y^2 = (4x + 3y)(3x - 2y)$,
$18x^2 + 18xy - 20y^2 = (3x - 2y)(6x + 10y)$.

$\therefore$ L.C.M. $= (4x + 3y)(3x - 2y)(6x + 10y)$.

6.

$x)x^4 - 2x^3 + x$	$2)2x^4 - 2x^3 - 2x - 2$	
$x^3 - 2x^2 + 1$	$x^4 - x^3 - x - 1$	x
$x^3 - 2x - 1$	$x^4 - 2x^3 + x$	
$-2)-2x^2 + 2x + 2$	$x^3 - 2x - 1$	1
$x^2 - x - 1$	$x^3 - x^2 - x$	$x + 1$
	$x^2 - x - 1$	
	$x^2 - x - 1$	

Hence, $x^4 - 2x^3 + x = (x^2 - x - 1) \times x(x - 1)$,
and $2x^4 - 2x^3 - 2x - 2 = (x^2 - x - 1) \times 2(x + 1)$.

$\therefore$ L.C.M. $= 2x(x^2 - x - 1)(x + 1)(x - 1)$.

7. $12x^2 + 2x - 4 = (6x + 4)(2x - 1) = 2(3x + 2)(2x - 1)$,
$12x^2 - 42x - 24 = (6x + 3)(2x - 8) = 6(2x + 1)(x - 4)$,
$12x^2 - 28x - 24 = (6x + 4)(2x - 6) = 4(3x + 2)(x - 3)$.

$\therefore$ L.C.M. $= 12(3x + 2)(2x - 1)(2x + 1)(x - 4)(x - 3)$.

5.

$3x^2)\,27x^6-3x^4+6x^3-3x^2$ | $6x)\,162x^6+48x^3-18x^2+6x$ | Reserve $3x$.

$9x^4-x^3+2x-1$ | $27x^5+8x^3-3x+1$ | $3x$

$9x^4+6x^3+3x$ | $27x^5-3x^3+6x^2-3x$

$-6x^3-x^2-x-1$ | $3x^3+2x^2+1$ | $3x-2$

$-6x^3-4x^3-2$ | $3x^3-x^3+x$ | $x+1$

$3x^3-x+1$ | $3x^2-x+1$ | $3x^2-x+1$

$\therefore$ H.C.F. $= 3x(3x^2-x+1)$.

6.

$10)\,20x^3-60x^2+50x-20$ | $4x)\,32x^4-92x^3+68x^2-24x$ | Reserve 2.

$2x^3-6x^2+5x-2$ | $8x^3-23x^2+17x-6$ | 4

$2x^3-6x^2+4x$ | $8x^3-24x^2+20x-8$

$x-2$ | x^2-3x+2 | $2x$

$x-2$ | x^2-2x | $x-1$

$-x+2$

$\therefore$ H.C.F. $= 2(x-2)$.

7.

$4x^2-8x-5$ | $12x^2-4x-65$ | 3

$4x^2-10x$ | $12x^3-24x-15$

$2x-5$ | $10)\,20x-50$

$2x-5$ | $2x-5$ | $2x+1$

$\therefore$ H.C.F. $= 2x-5$.

8.

$a)\,3a^3-5a^2x-2ax^2$ | $a)\,9a^3-8a^2x-20ax^2$ | Reserve a.

$3a^2-5ax-2x^2$ | $9a^2-8ax-20x^2$ | 3

$3a^2-6ax$ | $9a^2-15ax-6x^2$

$ax-2x^2$ | $7x)\,7ax-14x^2$ | $3a+x$

$ax-2x^2$ | $a-2x$

$\therefore$ H.C.F. $= a(a-2x)$.

9.

$10x^3+x^2-9x+24$ | $20x^4-17x^2+48x-3$ | $2x$

$10x^3-5x^2+15$ | $20x^4+2x^3-18x^2+48x$

$3)\,6x^2-9x+9$ | $-2x^3+x^2-3$ | -5

$2x^2-3x+3$ | $-2x^3+3x^2-3x$ | $-x-1$

$-2x^2+3x-3$

$-2x^2+3x-3$

$\therefore$ H.C.F. $= 2x^2-3x+3$.

10.

$2)\,8x^3-4x^2-32x-182$
$\quad 4x^3-2x^2-16x-\ 91$
$\quad 4x^3-2x^2-42x$
$\quad\quad 13)\,26x-\ 91$
$\quad\quad\quad 2x-\ 7$

$3)\,36x^3-84x^2-111x-126$
$\quad 12x^3-28x^2-\ 37x-\ 42$ | 3
$\quad 12x^3-\ 6x^2-\ 48x-273$
$\quad -11)-22x^2+\ 11x+231$
$\quad\quad 2x^2-\ \ x-\ 21$ | $2x$
$\quad\quad 2x^2-\ 7x$ | $x+3$
$\quad\quad\quad\quad 6x-\ 21$
$\quad\quad\quad\quad 6x-\ 21$

$\therefore$ H.C.F. $= 2x-7$.

11.

$5x^2(12x^3+4x^2+17x-3)$
$\quad 12x^3+4x^2+17x-3$
$\quad 12x^3+4x^2-\ \ x$
$\quad\quad 3)\,18x-3$
$\quad\quad\quad 6x-1$

$\therefore$ H.C.F. $= 5x(6x-1)$.

$10x\,(24x^3-52x^2+14x-1)$ | Reserve $5x$.
$\quad 24x^3-52x^2+14x-1$ | 2
$\quad 24x^3+\ 8x^2+34x-6$
$\quad -5)-60x^2-20x+5$
$\quad\quad 12x^2+\ 4x-1$ | x
$\quad\quad 12x^2-\ 2x$ | $2x+1$
$\quad\quad\quad\quad 6x-1$
$\quad\quad\quad\quad 6x-1$

12.

$2y)\,18x^3y-18x^2y^2-2xy^3-8y^4$
$\quad 9x^3-9x^2y-xy^2-\ 4y^3$
$\quad 9x^3\quad\ -xy^2-20y^3$
$\quad\ y)-9x^2y\quad\ +16y^3$
$\quad\quad -9x^2\quad\ +16y^2$
$\quad\quad -9x^2+12xy$
$\quad\quad\quad\quad -12xy+16y^2$
$\quad\quad\quad\quad -12xy+16y^2$

$xy)\,9x^4y-x^2y^3-20xy^4$ | Reserve y.
$\quad 9x^3-\ \ xy^2-20y^3$ | 1
$\quad 9x^3-16xy^2$ | $-x$
$\quad 5y^2)\,15xy^2-20y^3$
$\quad\quad\quad 3x\ -\ 4y$ | $-3x-4y$

$\therefore$ H.C.F. $= y(3x-4y)$.

13.

$6x^2-\ \ x-15$
$6x^2-10x$
$\quad\quad 9x-15$
$\quad\quad 9x-15$

$9x^2-3x-20$
2
$18x^2-6x-40$ | 3
$18x^2-3x-45$
$\quad\quad -3x+\ 5$ | $-2x-3$

$\therefore$ H.C.F $= 3x-5$.

14.

$12x^3 - 9x^2 + 5x + 2$ | $24x^2 + 10x + 1$ | $x + 7$
2 | $24x^2 + 6x$ | $6x + 1$
$24x^3 - 18x^2 + 10x + 4$ | $4x + 1$
$24x^3 + 10x^2 + x$ | $4x + 1$
$-28x^2 + 9x + 4$
-6
$168x^2 - 54x - 24$
$168x^2 + 70x + 7$
$-31) -124x - 31$
$4x + 1$

$\therefore$ H.C.F. $= 4x + 1$.

15.

$3) 6x^3 + 15x^2 - 6x + 9$ | $3) 9x^3 + 6x^2 - 51x + 36$ | Reserve 3.
$2x^3 + 5x^2 - 2x + 3$ | $3x^3 + 2x^2 - 17x + 12$
11 | 2
$22x^3 + 55x^2 - 22x + 33$ | $6x^3 + 4x^2 - 34x + 24$ | 3
$22x^3 + 56x^2 - 30x$ | $6x^3 + 15x^2 - 6x + 9$
$-x^2 + 8x + 33$ | $-11x^2 - 28x + 15$ | $-2x$
$-x^2 - 3x$ | $-11x^2 + 88x + 363$ | 11
$11x + 33$ | $-116) -116x - 348$
$11x + 33$ | $x + 3$ | $-x + 11$

$\therefore$ H.C.F. $= 3(x + 3)$.

16.

$4x^3 - x^2y - xy^2 - 5y^3$ | $7x^3 + 4x^2y + 4xy^2 - 3y^3$
$4x^3 + 4x^2y + 4xy^2$ | 4
$-5x^2y - 5xy^2 - 5y^3$ | $28x^3 + 16x^2y + 16xy^2 - 12y^3$ | 7
$-5x^2y - 5xy^2 - 5y^3$ | $28x^3 - 7x^2y - 7xy^2 - 35y^3$
$23y) 23x^2y + 23xy^2 + 23y^3$
$x^2 + xy + y^2$ | $4x - 5y$

$\therefore$ H.C.F. $= x^2 + xy + y^2$.

17.

$2a^3 - 2a^2 - 3a - 2$ | $3a^3 - a^2 - 2a - 16$
2 | 2
$4a^3 - 4a^2 - 6a - 4$ | $6a^3 - 2a^2 - 4a - 32$ | 3
$4a^3 + 5a^2 - 26a$ | $6a^3 - 6a^2 - 9a - 6$
$-9a^2 + 20a - 4$ | $4a^2 + 5a - 26$ | a
4 | $4a^2 - 8a$ | -9
$-36a^2 + 80a - 16$ | $13a - 26$
$-36a^2 - 45a + 234$ | $13a - 26$ | $4a + 13$
$125) 125a - 250$
$a - 2$

$\therefore$ H.C.F. $= a - 2$.

18.

$2)12y^3+2y^2-94y-60$
$6y^3+y^2-47y-30$
8
$48y^3+8y^2-376y-240$
$48y^3-42y^2-405y$
$50y^2+29y-240$
8
$400y^2+232y-1920$
$400y^2-350y-3375$
$291)582y+1455$
$2y+5$

$2)48y^3-24y^2-348y+30$ | Reserve 2.
$24y^3-12y^2-174y+15$ | 4
$24y^3+4y^2-188y-120$
$-16y^2+14y+135$ | $-3y-25$
$-16y^2-40y$
$54y+135$ | $-8y+27$
$54y+135$

$\therefore$ H.C.F. $= 2(2y+5)$.

19.

$9x(2x^4-6x^3-x^2+15x-10)$
$2x^4-6x^3-x^2+15x-10$
9
$18x^4-54x^3-9x^2+135x-90$
$18x^4-2x^3-45x^2+5x$
$2)-52x^3+36x^2+130x-90$
$-26x^3+18x^2+65x-45$
9
$-234x^3+162x^2+585x-405$
$-234x^3+26x^2+585x-65$
$68)136x^2-340$
$2x^2-5$

$6x^2(4x^4+6x^3-4x^2-15x-15)$ | Reserve $3x$.
$4x^4+6x^3-4x^2-15x-15$ | 2
$4x^4-12x^3-2x^2+30x-20$
$18x^3-2x^2-45x+5$ | $x-13$
$18x^3-45x$ | $9x-1$
$-2x^2+5$
$-2x^2+5$

$\therefore$ H.C.F. $= 3x(2x^2-5)$.

20.

$15x^4+2x^3-75x^2+5x+2$
$15x^4-75x^2+15x$
$2x^3-10x+2$
$2x^3-10x+2$

$\therefore$ H.C.F. $= x^3-5x+1$.

$35x^4+x^3-175x^2+30x+1$ |
3
$105x^4+3x^3-525x^2+90x+3$ | 7
$105x^4+14x^3-525x^2+35x+14$
$-11)-11x^3+55x-11$ | $15x+2$
x^3-5x+1

21.

$21x^3-32x^2-54x-7$
5
$105x^3-160x^2-270x-35$
$105x^3+99x^2+12x$
$-259x^2-282x-35$
5
$-1295x^2-1410x-175$
$-1295x^2-1221x-148$
$-27)-189x-27$
$7x+1$

$\therefore$ H.C.F. $= 7x+1$.

$21x^4-4x^3-15x^2-2x$ | x
$21x^4-32x^3-54x^2-7x$
$28x^3+39x^2+5x$
3
$84x^3+117x^2+15x$ | 4
$84x^3-128x^2-216x-28$
$7)245x^2+231x+28$
$35x^2+33x+4$ | $3x-37$
$35x^2+5x$
$28x+4$ | $5x+4$
$28x+4$

22.

$y)\,9x^4y-22x^3y^3-3xy^4+10y^5$

$9x^4-22x^2y^2-3xy^3+10y^4$ | 2

$18x^4-44x^2y^2-6xy^3+20y^4$

$18x^4-9x^2y^2+105xy^3-69x^2y$

$y)\,69x^3y-35x^2y^2-111xy^3+20y^4$

$69x^3-35x^2y-111xy^2+20y^3$ | 2

$138x^3-70x^2y-222xy^2+40y^3$

$138x^3-529x^2y-69xy^2+805y^3$

$153y)\,459x^2y-153xy^2-765y^3$

$3x^2-xy-5y^2$

$xy)\,9x^5y-6x^4y^2+x^3y^3-25xy^5$ | Res. y.

$9x^4-6x^3y+x^2y^2-25y^4$ | 1

$9x^4-22x^3y^2-3xy^3+10y^4$

$-y)-6x^3y+23x^2y^2+3xy^3-35y^4$

$6x^3-23x^2y-3xy^2+35y^3$ | $3x$

$6x^3-2x^2y-10xy^2$ | 23

$-7y)-21x^2y+7xy^2+35y^3$ | $2x$

$3x^2-xy-5y^2$ | 1

$3x^2-xy-5y^2$

$\therefore$ H.C.F. $= y(3x^2-xy-5y^2)$.

23.

$4x^4+2x^3-18x^2+3x-5$

$4x^4-8x^3+2x^2-2x$

$10x^3-20x^2+5x-5$

$10x^3-20x^2+5x-5$

$6x^5-4x^4-11x^3-3x^2-3x-1$ | 2

$12x^5-8x^4-22x^3-6x^2-6x-2$ | $3x$

$12x^5+6x^4-54x^3+9x^2-15x$

$-14x^4+32x^3-15x^2+9x-2$ | 2

$-28x^4+64x^3-30x^2+18x-4$ | -7

$-28x^4-14x^3+126x^2-21x+35$

$39)\,78x^3-156x^2+39x-39$

$2x^3-4x^2+x-1$ | $2x+5$

$\therefore$ H.C.F. $= 2x^3-4x^2+x-1$.

24.

$3x^3-7ax^2+3a^2x-2a^3$ | 2

$6x^3-14ax^2+6a^2x-4a^3$

$6x^3-9ax^2-6a^2x$

$-a)-5ax^2+12a^2x-4a^3$

$5x^2-12ax+4a^2$ | 2

$10x^2-24ax+8a^2$

$10x-15a-10a^2$

$-9a)-9ax+18a^2$

$x-2a$

$x^4-ax^3-a^2x^2-a^3x-2a^4$ | 3

$3x^4-3ax^3-3a^2x^2-3a^3x-6a^4$ | x

$3x^4-7ax^3+3a^2x^2-2a^3x$

$4ax^3-6a^2x^2-a^3x-6a^4$ | 3

$12ax^3-18a^2x^2-3a^3x-18a^4$ | $4a$

$12ax^3-28a^2x^2+12a^3x-8a^4$

$5a^2)\,10a^2x^2-15a^3x-10a^4$

$2x^2-3ax-2a^2$ | $3x$

$2x^2-4ax$ | 5

$ax-2a^2$ | $2x+a$

$ax-2a^2$

$\therefore$ H.C.F. $= x-2a$.

Exercise 43.

1. $2x^3+x-1=(x+1)(2x-1)$,
$x^2+5x+4=(x+1)(x+4)$,
$x^3+1=(x+1)(x^2-x+1)$.
$\therefore$ H.C.F. $= x+1$.

2. $y^3-y^2-y+1 = y^2(y-1)-(y-1)$
$= (y^2-1)(y-1)$,
$3y^2-2y-1 = (y-1)(3y+1)$,
$y^3-y^2+y-1 = y^2(y-1)+(y-1)$
$= (y^2+1)(y-1)$.
$\therefore$ H.C.F. $= y-1$.

3.

$x^3-4x^2+9x-10$	$x^3+2x^2-3x+20$	1
x^3-2x^2+5x	$x^3-4x^2+9x-10$	
$-2x^2+4x-10$	$6)6x^2-12x+30$	
$-2x^2+4x-10$	x^2-2x+5	$x-2$
x^2-2x+5	$x^3+5x^2-9x+35$	$x+7$
	x^3-2x^2+5x	
	$7x^2-14x+35$	
$\therefore$ H.C.F. $= x^2-2x+5$.	$7x^2-14x+35$	

4.

$x^3-7x^2+16x-12$	$3x^3-14x^2+16x$	3
7	$3x^3-21x^2+48x-36$	
$7x^3-49x^2+112x-84$	$7x^2-32x+36$	$x-17$
$7x^3-32x^2+36x$	$7x^2-14x$	
$-17x^2+76x-84$	$-18x+36$	$7x-18$
7	$-18x+36$	
$-119x^2+532x-588$		
$-119x^2+544x-612$		
$-12)-12x+24$		
$x-2$	$5x^3-10x^2+7x-14$	$5x^2+7$
	$5x^3-10x^2$	
	$7x-14$	
$\therefore$ H.C.F. $= x-2$.	$7x-14$	

5.

$y^3-5y^2+11y-15$	y^3-y^2+3y+5	1
y^3-y^2+3y+5	y^3-2y^2+5y	$y+1$
$-4)-4y^2+8y-20$	y^2-2y+5	
y^3-2y+5	y^2-2y+5	
y^2-2y+5	$2y^3-7y^2+16y-15$	$2y-3$
	$2y^3-4y^2+10y$	
	$-3y^2+6y-15$	
$\therefore$ H.C.F. $= y^2-2y+5$.	$-3y^2+6y-15$	

6. $2x^2+3x-5=(2x+5)(x-1)$.
$3x^2-x-2=(3x+2)(x-1)$.
$2x^2+x-3=(2x+3)(x-1)$.
$\therefore$ H.C.F. $=x-1$.

7.

x^3-1	x^3-x^2-x-2	1
x^3+x^2+x	x^3-1	
$-x^2-x-1$	$-x^2-x-1$	$-x+1$
$-x^2-x-1$		
x^2+x+1	$2x^3-x^2-x-3$	$2x-3$
	$2x^3+2x^2+2x$	
	$-3x^2-3x-3$	
	$-3x^2-3x-3$	

$\therefore$ H.C.F. $=x^2+x+1$.

8.

x^3-3x-2	$2x^3+3x^2-1$	2
x^3+2x^2+x	$2x^3-6x-4$	
$-2x^2-4x-2$	$3)3x^2+6x+3$	
$-2x^2-4x-2$	x^2+2x+1	$x-2$
x^2+2x+1	x^3+1	$x-2$
x^2+x	x^3+2x^2+x	
$x+1$	$-2x^2-x+1$	
$x+1$	$-2x^2-4x-2$	
	$3)3x+3$	
	$x+1$	$x+1$

$\therefore$ H.C.F. $=x+1$.

9. $12(x^4-y^4)=12(x^2+y^2)(x^2-y^2)$
$=12(x^2+y^2)(x+y)(x-y)$;
$10(x^6-y^6)=10(x^3+y^3)(x^3-y^3)$
$=10(x+y)(x^2-xy+y^2)(x-y)(x^2+xy+y^2)$;
$8(x^4y+xy^4)=8xy(x^3+y^3)$
$=8xy(x+y)(x^2-xy+y^2)$.
$\therefore$ H.C.F. $=2(x+y)$.

10. $x^4+xy^3=x(x^3+y^3)$
$=x(x+y)(x^2-xy+y^2)$;
$x^3y+y^4=y(x^3+y^3)$
$=y(x+y)(x^2-xy+y^2)$;
$x^4+x^2y^2+y^4=(x^4+2x^2y^2+y^4)-x^2y^2$
$=(x^2+y^2)^2-x^2y^2$
$=(x^2+xy+y^2)(x^2-xy+y^2)$.
$\therefore$ H.C.F. $=x^2-xy+y^2$.

11. $2(x^3y - xy^3) = 2xy\,(x-y)$,
$3(x^3y - xy^3) = 3xy\,(x+y)(x-y)$,
$4(x^4y - xy^4) = 4xy\,(x-y)(x^2+xy+y^2)$,
$5(x^5y - xy^5) = 5xy\,(x+y)(x-y)(x^2+y^2)$.
$\therefore$ H. C. F. $= xy(x-y)$.

Exercise 44.

1. $4a^3x = 2^2 \times a^3 \times x$,
$6a^2x^2 = 3 \times 2 \times a^2 \times x^2$,
$2ax^3 = 2 \times a \times x^3$.
$\therefore$ L. C. M. $= 12a^3x^3$.

2. $18ax^2 = 3^2 \times 2 \times a \times x^2$,
$72ay^2 = 3^2 \times 2^3 \times a \times y^2$,
$12xy = 3 \times 2^2 \times x \times y$.
$\therefore$ L. C. M. $= 72ax^2y^2$.

3. $x^2 = x \times x$,
$ax + x^2 = x(a+x)$.
$\therefore$ L. C. M. $= x^2(a+x)$.

4. $x^2 - 1 = (x+1)(x-1)$,
$(x^2 - x) = x(x-1)$.
$\therefore$ L. C. M. $= x(x+1)(x-1)$.

5. $a^2 - b^2 = (a+b)(a-b)$,
$a^2 + ab = a(a+b)$.
$\therefore$ L. C. M. $= a(a+b)(a-b)$.

6. $2x - 1 = 2x - 1$,
$4x^2 - 1 = (2x+1)(2x-1)$.
$\therefore$ L. C. M. $= (2x+1)(2x-1)$.

7. $a + b = a + b$,
$a^3 + b^3 = (a+b)(a^2 - ab + b^2)$.
$\therefore$ L. C. M. $= (a+b)(a^2 - ab + b^2)$.

8. $x^2 - 1 = (x+1)(x-1)$,
$x^2 + 1 = x^2 + 1$,
$x^4 - 1 = (x^2+1)(x+1)(x-1)$.
$\therefore$ L. C. M. $= (x^2+1)(x+1)(x-1)$.

9. $x^2 - x = x(x-1)$,
$x^3 - 1 = (x-1)(x^2+x+1)$,
$x^3 + 1 = (x+1)(x^2-x+1)$.
$\therefore$ L. C. M. $= x(x^3+1)(x^3-1)$.

10. $x^2 - 1 = (x+1)(x-1)$,
$x^2 - x = x(x+1)$,
$x^3 - 1 = (x-1)(x^2+x+1)$.
$\therefore$ L. C. M. $= x(x+1)(x^3-1)$.

11. $2a + 1 = 2a + 1$,
$4a^2 - 1 = (2a+1)(2a-1)$,
$8a^3 + 1 = (2a+1)(4a^2-2a+1)$.
$\therefore$ L. C. M. $= (8a^3+1)(2a-1)$.

12. $(a+b)^2 = (a+b)^2$,
$(a^2 - b^2) = (a+b)(a-b)$.
$\therefore$ L. C. M. $= (a+b)^2(a-b)$.

13. $4(1+x) = 4(1+x)$,
$4(1-x) = 4(1-x)$,
$2(1-x^2) = 2(1+x)(1-x)$.
$\therefore$ L. C. M. $= 4(1+x)(1-x)$.

14. $x - 1 = x - 1$,
$x^2 + x + 1 = x^2 + x + 1$,
$x^3 - 1 = (x-1)(x^2+x+1)$.
$\therefore$ L. C. M. $= x^3 - 1$.

15. $x^2 - y^2 = (x+y)(x-y)$,
$(x+y)^2 = (x+y)^2$,
$(x-y)^2 = (x-y)^2$.
$\therefore$ L. C. M. $= (x+y)^2(x-y)^2$.

16. $x^2 - y^2 = (x+y)(x-y)$,
$3(x-y)^2 = 3(x-y)^2$,
$12(x^3+y^3) = 12(x+y)(x^2-xy+y^2)$.
$\therefore$ L. C. M. $= 12(x^3+y^3)(x-y)^2$.

17. $6(x^2 + xy) = 6x(x+y)$,
$8(xy - y^2) = 8y(x-y)$,
$10(x^2 - y^2) = 10(x+y)(x-y)$.
$\therefore$ L. C. M. $= 120xy(x+y)(x-y)$.

18. $x^2+5x+6=(x+3)(x+2)$,
$x^2+6x+8=(x+2)(x+4)$.
$\therefore$ L. C. M. $=(x+2)(x+3)(x+4)$.

19. $a^2-a-20=(a-5)(a+4)$,
$a^2+a-12=(a+4)(a-3)$.
$\therefore$ L. C. M. $=(a-3)(a+4)(a-5)$.

20. $x^2+11x+30=(x+6)(x+5)$,
$x^2+12x+35=(x+5)(x+7)$.
$\therefore$ L. C. M. $=(x+5)(x+6)(x+7)$.

21. $x^2-9x-22=(x+2)(x-11)$,
$x^2-13x+22=(x-2)(x-11)$.
$\therefore$ L. C. M. $=(x+2)(x-2)(x-11)$.

22. $4ab(a^2-3ab+2b^2)=4ab(a-2b)(a-b)$,
$5a^2(a^2+ab-6b^2)=5a^2(a+3b)(a-2b)$.
$\therefore$ L. C. M. $=20a^2b(a-b)(a-2b)(a+3b)$.

23. $20(x^2-1)=20(x+1)(x-1)$,
$24(x^2-x-2)=24(x-2)(x+1)$,
$16(x^2+x-2)=16(x+2)(x-1)$.
$\therefore$ L.C.M. $=240(x+1)(x-1)(x+2)(x-2)$.

24. $12xy(x^2-y^2)=12xy(x+y)(x-y)$,
$2x^2(x+y)^2=2x^2(x+y)(x+y)$,
$3y^2(x-y)^2=3y^2(x-y)(x-y)$.
$\therefore$ L. C. M. $=12x^2y^2(x-y)^2(x+y)^2$.

25. $(a-b)(b-c)=(a-b)(b-c)$,
$(b-c)(c-a)=-(a-c)(b-c)$,
$(c-a)(a-b)=-(a-b)(a-c)$.
$\therefore$ L. C. M. $=(a-b)(b-c)(c-a)$.

26. $(a-b)(a-c)=(a-b)(a-c)$,
$(b-a)(b-c)=-(a-b)(b-c)$,
$(c-a)(c-b)=(a-c)(b-c)$.
$\therefore$ L.C.M. $=(a-b)(a-c)(b-c)$.

27. $x^3-4x^2+3x=x(x^2-4x+3)$
$=x(x-3)(x-1)$,
$x^4+x^3-12x^2=x^2(x^2+x-12)$
$=x^2(x+4)(x-3)$,
$x^5+3x^4-4x^3=x^3(x^2+3x-4)$
$=x^3(x-1)(x+4)$.
$\therefore$ L. C. M. $=x^3(x-1)(x-3)(x+4)$.

28. $x^2y-xy^2=xy(x-y)$,
$3x(x-y)^2=3x(x-y)^2$,
$4y(x-y)^3=4y(x-y)^3$.
$\therefore$ L. C. M. $=12xy(x-y)^3$.

29. $(a+b)^2-(c+d)^2=(a+b+c+d)(a+b-c-d)$,
$(a+c)^2-(b+d)^2=(a+b+c+d)(a-b+c-d)$,
$(a+d)^2-(b+c)^2=(a+b+c+d)(a-b-c+d)$.
$\therefore$ L. C. M. $=(a+b+c+d)(a+b-c-d)(a-b+c-d)(a-b-c+d)$.

30. $(2x-4)(3x-6)=2(x-2)\times 3(x-2)$,
$(x-3)(4x-8)=(x-3)\times 4(x-2)$,
$(2x-6)(5x-10)=2(x-3)\times 5(x-2)$.
$\therefore$ L. C. M. $=60(x-2)^2(x-3)$.

Exercise 45.

1. $6x^2 - x - 2 = (3x - 2)(2x + 1)$,
$21x^2 - 17x + 2 = (3x - 2)(7x - 1)$,
$14x^2 + 5x - 1 = (2x + 1)(7x - 1)$.

$\therefore$ L.C.M. $= (3x - 2)(2x + 1)(7x - 1)$.

2. $x^2 - 1 = (x + 1)(x - 1)$,
$x^2 + 2x - 3 = (x + 3)(x - 1)$,
$6x^2 - x - 2 = (3x - 2)(2x + 1)$.

$\therefore$ L.C.M. $= (2x + 1)(3x - 2)(x - 1)(x + 1)(x + 3)$

3. $x^3 - 27 = (x - 3)(x^2 + 3x + 9)$,
$x^2 - 15x + 36 = (x - 3)(x - 12)$,
$x^3 - 3x^2 - 2x + 6 = x^2(x - 3) - 2(x - 3)$
$= (x^2 - 2)(x - 3)$.

$\therefore$ L.C.M. $= (x - 3)(x - 12)(x^2 - 2)(x^2 + 3x + 9)$.

4. $5x^2 + 19x - 4 = (5x - 1)(x + 4)$,
$10x^2 + 13x - 3 = (5x - 1)(2x + 3)$.

$\therefore$ L.C.M. $= (5x - 1)(x + 4)(2x + 3)$.

5. $12x^2 + xy - 6y^2 = (4x + 3y)(3x - 2y)$,
$18x^2 + 18xy - 20y^2 = (3x - 2y)(6x + 10y)$.

$\therefore$ L.C.M. $= (4x + 3y)(3x - 2y)(6x + 10y)$.

6.

$x)x^4 - 2x^3 + x$	$2)2x^4 - 2x^3 - 2x - 2$	
$x^3 - 2x^2 + 1$	$x^4 - x^3 - x - 1$	x
$x^3 - 2x - 1$	$x^4 - 2x^3 + x$	
$-2)-2x^2 + 2x + 2$	$x^3 - 2x - 1$	1
$x^2 - x - 1$	$x^3 - x^2 - x$	$x + 1$
	$x^3 - x - 1$	
	$x^2 - x - 1$	

Hence, $x^4 - 2x^3 + x = (x^2 - x - 1) \times x(x - 1)$,
and $2x^4 - 2x^3 - 2x - 2 = (x^2 - x - 1) \times 2(x + 1)$.

$\therefore$ L.C.M. $= 2x(x^2 - x - 1)(x + 1)(x - 1)$.

7. $12x^3 + 2x - 4 = (6x + 4)(2x - 1) = 2(3x + 2)(2x - 1)$,
$12x^2 - 42x - 24 = (6x + 3)(2x - 8) = 6(2x + 1)(x - 4)$,
$12x^2 - 28x - 24 = (6x + 4)(2x - 6) = 4(3x + 2)(x - 3)$.

$\therefore$ L.C.M. $= 12(3x + 2)(2x - 1)(2x + 1)(x - 4)(x - 3)$.

5.

$3x^3)\ 27x^3-3x^4+6x^3-3x^2$ | $6x)\ 162x^6+48x^3-18x^2+6x$ | Reserve $3x$.

$9x^4-\ x^3+2x\ -1$ | $27x^5+8x^2-3x\ +1$ | $3x$

$9x^4+6x^3+3x$ | $27x^5-3x^3+6x^2-3x$

$-6x^3-\ x^2-x-1$ | $3x^3+2x^2\ \ +1$ | $3x-2$

$-6x^3-4x^2\ \ -2$ | $3x^3-\ x^2+x$ | $x+1$

$3x^2-x+1$ | $3x^2-x+1$ |

$3x^2-x+1$ |

$\therefore$ H.C.F. $= 3x(3x^2-x+1)$.

6.

$10)\ 20x^3-60x^2+50x-20$ | $4x)\ 32x^4-92x^3+68x^2-24x$ | Reserve 2.

$2x^3-\ 6x^2+\ 5x-\ 2$ | $8x^3-23x^2+17x-\ 6$ | 4

$2x^3-\ 6x^2+\ 4x$ | $8x^3-24x^2+20x-\ 8$ |

$x-\ 2$ | $x^2-\ 3x+\ 2$ | $2x$

$x-\ 2$ | $x^2-\ 2x$ | $x-1$

$-\ x+\ 2$ |

$\therefore$ H.C.F. $= 2(x-2)$.

7.

$4x^2-\ 8x-5$ | $12x^2-\ 4x-65$ | 3

$4x^2-10x$ | $12x^2-24x-15$ |

$2x-5$ | $10)\ 20x-50$ |

$2x-5$ | $2x-\ 5$ | $2x+1$

$\therefore$ H.C.F. $= 2x-5$.

8.

$a)\ 3a^3-5a^2x-2ax^2$ | $a)\ 9a^3-8a^2x-20ax^2$ | Reserve a.

$3a^2-5ax\ -\ 2x^2$ | $9a^2-\ 8ax-20x^2$ | 3

$3a^2-6ax$ | $9a^2-15ax-\ 6x^2$ |

$ax\ -\ 2x^2$ | $7x)\ 7ax-14x^2$ | $3a+x$

$ax\ -\ 2x^2$ | $a\ -\ 2x$ |

$\therefore$ H.C.F. $= a(a-2x)$.

9.

$10x^3+\ x^2-9x+24$ | $20x^4-17x^2+48x-3$ | $2x$

$10x^3-5x^2\ \ \ +15$ | $20x^4+2x^3-18x^2+48x$ |

$3)\ 6x^2-9x+\ 9$ | $-2x^3+\ \ x^2\ \ \ -3$ | -5

$2x^2-3x+\ 3$ | $-2x^3+\ 3x^2-3x$ | $-x-1$

$-2x^2+3x-3$ |

$-2x^2+3x-3$ |

$\therefore$ H.C.F. $= 2x^2-3x+3$.

10.

$2)8x^3-4x^2-32x-182$

$4x^3-2x^2-16x-91$

$4x^3-2x^2-42x$

$13)26x-91$

$2x-7$

$3)36x^3-84x^2-111x-126$

$12x^3-28x^2-37x-42$ | 3

$12x^3-6x^2-48x-273$

$-11)-22x^2+11x+231$

$2x^2-x-21$ | $2x$

$2x^2-7x$ | $x+3$

$6x-21$

$6x-21$

$\therefore$ H.C.F. $= 2x-7$.

11.

$5x^2(12x^3+4x^2+17x-3)$

$12x^3+4x^2+17x-3$

$12x^3+4x^2-x$

$3)18x-3$

$6x-1$

$\therefore$ H.C.F. $= 5x(6x-1)$.

$10x(24x^3-52x^2+14x-1)$ | Reserve $5x$.

$24x^3-52x^2+14x-1$ | 2

$24x^3+8x^2+34x-6$

$-5)-60x^2-20x+5$

$12x^2+4x-1$ | x

$12x^2-2x$ | $2x+1$

$6x-1$

$6x-1$

12.

$2y)18x^2y-18x^2y^2-2xy^3-8y^4$

$9x^3-9x^2y-xy^2-4y^3$

$9x^3-xy^2-20y^3$

$y)-9x^2y+16y^3$

$-9x^2+16y^3$

$-9x^2+12xy$

$-12xy+16y^3$

$-12xy+16y^3$

$xy)9x^4y-x^2y^3-20xy^4$ | Reserve y.

$9x^3-xy^2-20y^3$ | 1

$9x^3-16xy^2$ | $-x$

$5y^2)15xy^2-20y^3$

$3x-4y$ | $-3x-4y$

$\therefore$ H.C.F. $= y(3x-4y)$.

13.

$6x^2-x-15$

$6x^2-10x$

$9x-15$

$9x-15$

$9x^2-3x-20$

2

$18x^2-6x-40$ | 3

$18x^2-3x-45$

$-3x+5$ | $-2x-3$

$\therefore$ H.C.F $= 3x-5$.

14.

$12x^3 - 9x^2 + 5x + 2$ | $24x^2 + 10x + 1$ | $x + 7$
2 | $24x^2 + 6x$ | $6x + 1$
$24x^3 - 18x^2 + 10x + 4$ | $4x + 1$
$24x^3 + 10x^2 + x$ | $4x + 1$
$-28x^2 + 9x + 4$
-6
$168x^2 - 54x - 24$
$168x^2 + 70x + 7$
$-31) - 124x - 31$
$4x + 1$

$\therefore$ H.C.F. $= 4x + 1$.

15.

$3)6x^3 + 15x^2 - 6x + 9$ | $3)9x^3 + 6x^2 - 51x + 36$ | Reserve 3.
$2x^3 + 5x^2 - 2x + 3$ | $3x^3 + 2x^2 - 17x + 12$
11 | 2
$22x^3 + 55x^2 - 22x + 33$ | $6x^3 + 4x^2 - 34x + 24$ | 3
$22x^3 + 56x^2 - 30x$ | $6x^3 + 15x^2 - 6x + 9$
$-x^2 + 8x + 33$ | $-11x^2 - 28x + 15$ | $-2x$
$-x^2 - 3x$ | $-11x^2 + 88x + 363$ | 11
$11x + 33$ | $-116) - 116x - 348$
$11x + 33$ | $x + 3$ | $-x + 11$

$\therefore$ H.C.F. $= 3(x + 3)$.

16.

$4x^3 - x^2y - xy^2 - 5y^3$ | $7x^3 + 4x^2y + 4xy^2 - 3y^3$
$4x^3 + 4x^2y + 4xy^2$ | 4
$-5x^2y - 5xy^2 - 5y^3$ | $28x^3 + 16x^2y + 16xy^2 - 12y^3$ | 7
$-5x^2y - 5xy^2 - 5y^3$ | $28x^3 - 7x^2y - 7xy^2 - 35y^3$
$23y) 23x^2y + 23xy^2 + 23y^3$
$x^2 + xy + y^2$ | $4x - 5y$

$\therefore$ H.C.F. $= x^2 + xy + y^2$.

17.

$2a^3 - 2a^2 - 3a - 2$ | $3a^3 - a^2 - 2a - 16$
2 | 2
$4a^3 - 4a^2 - 6a - 4$ | $6a^3 - 2a^2 - 4a - 32$ | 3
$4a^3 + 5a^2 - 26a$ | $6a^3 - 6a^2 - 9a - 6$
$-9a^2 + 20a - 4$ | $4a^2 + 5a - 26$ | a
4 | $4a^2 - 8a$ | -9
$-36a^2 + 80a - 16$ | $13a - 26$
$-36a^2 - 45a + 234$ | $13a - 26$ | $4a + 13$
$125) 125a - 250$
$a - 2$

$\therefore$ H.C.F. $= a - 2$.

18.

$2)12y^3+2y^2-94y-60$

$6y^3+y^2-47y-30$

8

$48y^3+8y^2-376y-240$

$48y^3-42y^2-405y$

$50y^2+29y-240$

8

$400y^2+232y-1920$

$400y^2-350y-3375$

$291)582y+1455$

$2y+5$

$2)48y^3-24y^2-348y+30$ | Reserve 2.

$24y^3-12y^2-174y+15$ | 4

$24y^3+4y^2-188y-120$

$-16y^2+14y+135$ | $-3y-25$

$-16y^2-40y$

$54y+135$ | $-8y+27$

$54y+135$

$\therefore$ H.C.F. $= 2(2y+5)$.

19.

$9x(2x^4-6x^3-x^2+15x-10)$ | $6x^2(4x^4+6x^3-4x^2-15x-15)$ | Reserve $3x$.

$2x^4-6x^3-x^2+15x-10$ | $4x^4+6x^3-4x^2-15x-15$ | 2

9

$4x^4-12x^3-2x^2+30x-20$

$18x^4-54x^3-9x^2+135x-90$

$18x^4-2x^3-45x^2+5x$

$18x^3-2x^2-45x+5$ | $x-13$

$18x^3-45x$ | $9x-1$

$2)-52x^3+36x^2+130x-90$

$-2x^2+5$

$-2x^2+5$

$-26x^3+18x^2+65x-45$

9

$-234x^3+162x^2+585x-405$

$-234x^3+26x^2+585x-65$

$68)136x^2-340$

$2x^2-5$

$\therefore$ H.C.F. $= 3x(2x^2-5)$.

20.

$15x^4+2x^3-75x^2+5x+2$ | $35x^4+x^3-175x^2+30x+1$

$15x^4-75x^2+15x$

3

$2x^3-10x+2$ | $105x^4+3x^3-525x^2+90x+3$ | 7

$2x^3-10x+2$ | $105x^4+14x^3-525x^2+35x+14$

$\therefore$ H.C.F. $= x^3-5x+1$. | $-11)-11x^3+55x-11$ | $15x+2$

x^3-5x+1

21.

$21x^3-32x^2-54x-7$

5

$105x^3-160x^2-270x-35$

$105x^3+99x^2+12x$

$-259x^2-282x-35$

5

$-1295x^2-1410x-175$

$-1295x^2-1221x-148$

$-27)-189x-27$

$7x+1$

$\therefore$ H.C.F. $= 7x+1$.

$21x^4-4x^3-15x^2-2x$ | x

$21x^4-32x^3-54x^2-7x$

$28x^3+39x^2+5x$

3

$84x^3+117x^2+15x$ | 4

$84x^3-128x^2-216x-28$

$7)245x^2+231x+28$

$35x^2+33x+4$ | $3x-37$

$35x^2+5x$

$28x+4$ | $5x+4$

$28x+4$

22.

$$y)\,9x^4y-22x^3y^2-3xy^4+10y^5$$
$$9x^4-22x^3y^2-3xy^3+10y^4 \quad (2)$$
$$18x^4-44x^3y^2-6xy^3+20y^4$$
$$18x^4-9x^3y^2+105xy^3-69x^3y$$
$$y)\,69x^3y-35x^2y^2-111xy^3+20y^4$$
$$69x^3-35x^2y-111xy^2+20y^3 \quad (2)$$
$$138x^3-70x^2y-222xy^2+40y^3$$
$$138x^3-529x^2y-69xy^2+805y^3$$
$$153y)\,459x^2y-153xy^2-765y^3$$
$$3x^2-xy-5y^2$$

$$xy)\,9x^3y-6x^2y^2+x^3y^3-25xy^3 \quad \text{Res. } y.$$
$$9x^2-6x^3y+x^2y^2-25y^4 \quad 1$$
$$9x^4-22x^3y^2-3xy^3+10y^4$$
$$-y)-6x^3y+23x^2y^2+3xy^3-35y^4$$
$$6x^3-23x^2y-3xy^2+35y^3 \quad 3x$$
$$6x^3-2x^2y-10xy^2 \quad 23$$
$$-7y)-21x^2y+7xy^2+35y^3 \quad 2x$$
$$3x^2-xy-5y^2 \quad 1$$
$$3x^2-xy-5y^2$$

$\therefore$ H.C.F. $= y(3x^2-xy-5y^2)$.

23.

$$4x^4+2x^3-18x^2+3x-5$$
$$4x^4-8x^3+2x^2-2x$$
$$10x^3-20x^2+5x-5$$
$$10x^3-20x^2+5x-5$$

$$6x^5-4x^4-11x^3-3x^2-3x-1$$
$$12x^5-8x^4-22x^3-6x^2-6x-2 \quad 3x$$
$$12x^5+6x^4-54x^3+9x^2-15x$$
$$-14x^4+32x^3-15x^2+9x-2 \quad (2)$$
$$-28x^4+64x^3-30x^2+18x-4 \quad -7$$
$$-28x^4-14x^3+126x^2-21x+35$$
$$39)\,78x^3-156x^2+39x-39$$
$$2x^3-4x^2+x-1 \quad 2x+5$$

$\therefore$ H.C.F. $= 2x^3-4x^2+x-1$.

24.

$$3x^3-7ax^2+3a^2x-2a^3$$
$$6x^3-14ax^2+6a^2x-4a^3 \quad (2)$$
$$6x^3-9ax^2-6a^2x$$
$$-a)-5ax^2+12a^2x-4a^3$$
$$5x^2-12ax+4a^2 \quad (2)$$
$$10x^2-24ax+8a^2$$
$$10x-15ax-10a^2$$
$$-9a)-9ax+18a^2$$
$$x-2a$$

$$x^4-ax^3-a^2x^2-a^3x-2a^4$$
$$3x^4-3ax^3-3a^2x^2-3a^3x-6a^4 \quad x \quad (3)$$
$$3x^4-7ax^3+3a^2x^2-2a^3x$$
$$4ax^3-6a^2x^2-a^3x-6a^4 \quad (3)$$
$$12ax^3-18a^2x^2-3a^3x-18a^4 \quad 4a$$
$$12ax^3-28a^2x^2+12a^3x-8a^4$$
$$5a^2)\,10a^2x^2-15a^3x-10a^4$$
$$2x^2-3ax-2a^2 \quad 3x$$
$$2x^2-4ax \quad 5$$
$$ax-2a^2 \quad 2x+a$$
$$ax-2a^2$$

$\therefore$ H.C.F. $= x-2a$.

Exercise 43.

1. $2x^3+x-1=(x+1)(2x-1)$,
$x^2+5x+4=(x+1)(x+4)$,
$x^3+1=(x+1)(x^2-x+1)$.
$\therefore$ H.C.F. $= x+1$.

2. $y^3-y^2-y+1=y^2(y-1)-(y-1)$
$=(y^2-1)(y-1)$,
$3y^2-2y-1=(y-1)(3y+1)$,
$y^3-y^2+y-1=y^2(y-1)+(y-1)$
$=(y^2+1)(y-1)$.
$\therefore$ H.C.F. $= y-1$.

3.

$x^3-4x^2+9x-10$	$x^3+2x^2-3x+20$	1
x^3-2x^2+5x	$x^3-4x^2+9x-10$	
$-2x^2+4x-10$	$6)6x^2-12x+30$	
$-2x^2+4x-10$	x^2-2x+5	$x-2$
x^2-2x+5	$x^3+5x^2-9x+35$	$x+7$
	x^3-2x^2+5x	
	$7x^2-14x+35$	
$\therefore$ H.C.F. $= x^2-2x+5$.	$7x^2-14x+35$	

4.

$x^3-7x^2+16x-12$	$3x^3-14x^2+16x$	3
7	$3x^3-21x^2+48x-36$	
$7x^3-49x^2+112x-84$	$7x^2-32x+36$	$x-17$
$7x^3-32x^2+36x$	$7x^2-14x$	
$-17x^2+76x-84$	$-18x+36$	$7x-18$
7	$-18x+36$	
$-119x^2+532x-588$		
$-119x^2+544x-612$		
$-12)-12x+24$		
$x-2$	$5x^3-10x^2+7x-14$	$5x^2+7$
	$5x^3-10x^2$	
	$7x-14$	
$\therefore$ H.C.F. $= x-2$.	$7x-14$	

5.

$y^3-5y^2+11y-15$	y^3-y^2+3y+5	1
y^3-y^2+3y+5	y^3-2y^2+5y	$y+1$
$-4)-4y^2+8y-20$	y^2-2y+5	
y^2-2y+5	y^2-2y+5	
y^2-2y+5	$2y^3-7y^2+16y-15$	$2y-3$
	$2y^3-4y^2+10y$	
	$-3y^2+6y-15$	
$\therefore$ H.C.F. $= y^2-2y+5$.	$-3y^2+6y-15$	

6. $2x^2+3x-5=(2x+5)(x-1)$.
$3x^2-x-2=(3x+2)(x-1)$,
$2x^2+x-3=(2x+3)(x-1)$.
$\therefore$ H.C.F. $=x-1$.

7.
x^3-1 | x^3-x^2-x-2 | 1
x^3+x^2+x | $x^3\quad -1$ |
$-x^2-x-1$ | $-x^2-x-1$ | $-x+1$
$-x^2-x-1$ |
x^2+x+1 | $2x^3-x^2-x-3$ | $2x-3$
$2x^3+2x^2+2x$
$-3x^2-3x-3$
$-3x^2-3x-3$

$\therefore$ H.C.F. $=x^2+x+1$.

8.
$x^3-3x\quad -2$ | $2x^3+3x^2\quad -1$ | 2
x^3+2x^2+x | $2x^3\quad -6x-4$ |
$-2x^2-4x-2$ | $3)3x^2+6x+3$ |
$-2x^2-4x-2$ | x^2+2x+1 | $x-2$

x^2+2x+1 | x^3+1 | $x-2$
x^2+x | x^3+2x^2+x
$x+1$ | $-2x^2-x+1$
$x+1$ | $-2x^2-4x-2$
$3)3x+3$
$x+1$ | $x+1$

$\therefore$ H.C.F. $=x+1$.

9. $12(x^4-y^4)=12(x^2+y^2)(x^2-y^2)$
$=12(x^2+y^2)(x+y)(x-y)$;
$10(x^6-y^6)=10(x^3+y^3)(x^3-y^3)$
$=10(x+y)(x^2-xy+y^2)(x-y)(x^2+xy+y^2)$;
$8(x^4y+xy^4)=8xy(x^3+y^3)$
$=8xy(x+y)(x^2-xy+y^2)$.
$\therefore$ H.C.F. $=2(x+y)$.

10. $x^4+xy^3=x(x^3+y^3)$
$=x(x+y)(x^2-xy+y^2)$;
$x^3y+y^4=y(x^3+y^3)$
$=y(x+y)(x^2-xy+y^2)$;
$x^4+x^2y^2+y^4=(x^4+2x^2y^2+y^4)-x^2y^2$
$=(x^2+y^2)^2-x^2y^2$
$=(x^2+xy+y^2)(x^2-xy+y^2)$.
$\therefore$ H.C.F. $=x^2-xy+y^2$.

11. $2(x^2y - xy^2) = 2xy\,(x - y)$,
$3(x^3y - xy^3) = 3xy(x + y)(x - y)$,
$4(x^4y - xy^4) = 4xy(x - y)(x^2 + xy + y^2)$,
$5(x^5y - xy^5) = 5xy(x + y)(x - y)(x^2 + y^2)$.
$\therefore$ H. C. F. $= xy(x - y)$.

Exercise 44.

1. $4a^3x = 2^2 \times a^3 \times x$,
$6a^2x^2 = 3 \times 2 \times a^2 \times x^2$,
$2ax^2 = 2 \times a \times x^2$.
$\therefore$ L. C. M. $= 12a^3x^2$.

2. $18ax^2 = 3^2 \times 2 \times a \times x^2$,
$72ay^2 = 3^2 \times 2^3 \times a \times y^2$,
$12xy = 3 \times 2^2 \times x \times y$.
$\therefore$ L. C. M. $= 72ax^2y^2$.

3. $x^2 = x \times x$,
$ax + x^2 = x(a + x)$.
$\therefore$ L. C. M. $= x^2(a + x)$.

4. $x^2 - 1 = (x + 1)(x - 1)$,
$(x^2 - x) = x(x - 1)$.
$\therefore$ L. C. M. $= x(x + 1)(x - 1)$.

5. $a^2 - b^2 = (a + b)(a - b)$,
$a^2 + ab = a(a + b)$.
$\therefore$ L. C. M. $= a(a+b)(a-b)$.

6. $2x - 1 = 2x - 1$,
$4x^2 - 1 = (2x + 1)(2x - 1)$.
$\therefore$ L. C. M. $= (2x+1)(2x-1)$.

7. $a + b = a + b$,
$a^3 + b^3 = (a + b)(a^2 - ab + b^2)$.
$\therefore$ L.C.M. $= (a+b)(a^2-ab+b^2)$.

8. $x^2 - 1 = (x + 1)(x - 1)$,
$x^2 + 1 = x^2 + 1$,
$x^4 - 1 = (x^2 + 1)(x + 1)(x - 1)$.
$\therefore$ L. C. M. $= (x^2+1)(x+1)(x-1)$.

9. $x^2 - x = x(x - 1)$,
$x^3 - 1 = (x - 1)(x^2 + x + 1)$,
$x^3 + 1 = (x + 1)(x^2 - x + 1)$.
$\therefore$ L. C. M. $= x(x^3 + 1)(x^3 - 1)$.

10. $x^2 - 1 = (x + 1)(x - 1)$,
$x^3 - x = x(x + 1)$,
$x^3 - 1 = (x - 1)(x^2 + x + 1)$.
$\therefore$ L. C. M. $= x(x + 1)(x^3 - 1)$.

11. $2a + 1 = 2a + 1$,
$4a^2 - 1 = (2a + 1)(2a - 1)$,
$8a^3 + 1 = (2a+1)(4a^2-2a+1)$.
$\therefore$ L. C. M. $= (8a^3+1)(2a-1)$.

12. $(a + b)^2 = (a + b)^2$,
$(a^2 - b^2) = (a + b)(a - b)$.
$\therefore$ L. C. M. $= (a + b)^2(a - b)$.

13. $4(1 + x) = 4(1 + x)$,
$4(1 - x) = 4(1 - x)$,
$2(1 - x^2) = 2(1 + x)(1 - x)$.
$\therefore$ L. C. M. $= 4(1 + x)(1 - x)$.

14. $x - 1 = x - 1$,
$x^2 + x + 1 = x^2 + x + 1$,
$x^3 - 1 = (x - 1)(x^2 + x + 1)$.
$\therefore$ L. C. M. $= x^3 - 1$.

15. $x^2 - y^2 = (x + y)(x - y)$,
$(x + y)^2 = (x + y)^2$,
$(x - y)^2 = (x - y)^2$.
$\therefore$ L. C. M. $= (x + y)^2(x - y)^2$.

16. $x^2 - y^2 = (x + y)(x - y)$,
$3(x - y)^2 = 3(x - y)^2$,
$12(x^3+y^3) = 12(x+y)(x^2-xy+y^2)$.
$\therefore$ L. C. M. $= 12(x^3+y^3)(x - y)^2$.

17. $6(x^2 + xy) = 6x(x + y)$,
$8(xy - y^2) = 8y(x - y)$,
$10(x^2 - y^2) = 10(x + y)(x - y)$.
$\therefore$ L. C. M. $= 120xy(x+y)(x-y)$.

18. $x^2+5x+6=(x+3)(x+2)$,
$x^2+6x+8=(x+2)(x+4)$.
$\therefore$ L. C. M. $=(x+2)(x+3)(x+4)$.

19. $a^2-a-20=(a-5)(a+4)$,
$a^2+a-12=(a+4)(a-3)$.
$\therefore$ L. C. M. $=(a-3)(a+4)(a-5)$.

20. $x^2+11x+30=(x+6)(x+5)$,
$x^2+12x+35=(x+5)(x+7)$.
$\therefore$ L. C. M. $=(x+5)(x+6)(x+7)$.

21. $x^2-9x-22=(x+2)(x-11)$,
$x^2-13x+22=(x-2)(x-11)$.
$\therefore$ L. C. M. $=(x+2)(x-2)(x-11)$.

22. $4ab(a^2-3ab+2b^2)=4ab(a-2b)(a-b)$,
$5a^2(a^2+ab-6b^2)=5a^2(a+3b)(a-2b)$.
$\therefore$ L. C. M. $=20a^2b(a-b)(a-2b)(a+3b)$.

23. $20(x^2-1)=20(x+1)(x-1)$,
$24(x^2-x-2)=24(x-2)(x+1)$,
$16(x^2+x-2)=16(x+2)(x-1)$.
$\therefore$ L.C.M. $=240(x+1)(x-1)(x+2)(x-2)$.

24. $12xy(x^2-y^2)=12xy(x+y)(x-y)$,
$2x^2(x+y)^2=2x^2(x+y)(x+y)$,
$3y^2(x-y)^2=3y^2(x-y)(x-y)$.
$\therefore$ L. C. M. $=12x^2y^2(x-y)^2(x+y)^2$.

25. $(a-b)(b-c)=(a-b)(b-c)$,
$(b-c)(c-a)=-(a-c)(b-c)$,
$(c-a)(a-b)=-(a-b)(a-c)$.
$\therefore$ L. C. M. $=(a-b)(b-c)(c-a)$.

26. $(a-b)(a-c)=(a-b)(a-c)$,
$(b-a)(b-c)=-(a-b)(b-c)$,
$(c-a)(c-b)=(a-c)(b-c)$.
$\therefore$ L.C.M. $=(a-b)(a-c)(b-c)$.

27. $x^3-4x^2+3x=x(x^2-4x+3)$
$=x(x-3)(x-1)$,
$x^4+x^3-12x^2=x^2(x^2+x-12)$
$=x^2(x+4)(x-3)$,
$x^5+3x^4-4x^3=x^3(x^2+3x-4)$
$=x^3(x-1)(x+4)$.
$\therefore$ L. C. M. $=x^3(x-1)(x-3)(x+4)$.

28. $x^2y-xy^2=xy(x-y)$,
$3x(x-y)^2=3x(x-y)^2$,
$4y(x-y)^3=4y(x-y)^3$.
$\therefore$ L. C. M. $=12xy(x-y)^3$.

29. $(a+b)^2-(c+d)^2=(a+b+c+d)(a+b-c-d)$,
$(a+c)^2-(b+d)^2=(a+b+c+d)(a-b+c-d)$,
$(a+d)^2-(b+c)^2=(a+b+c+d)(a-b-c+d)$.
$\therefore$ L. C. M. $=(a+b+c+d)(a+b-c-d)(a-b+c-d)(a-b-c+d)$.

30. $(2x-4)(3x-6)=2(x-2)\times 3(x-2)$,
$(x-3)(4x-8)=(x-3)\times 4(x-2)$,
$(2x-6)(5x-10)=2(x-3)\times 5(x-2)$.
$\therefore$ L. C. M. $=60(x-2)^2(x-3)$.

Exercise 45.

1. $6x^2 - x - 2 = (3x - 2)(2x + 1)$,
$21x^2 - 17x + 2 = (3x - 2)(7x - 1)$,
$14x^2 + 5x - 1 = (2x + 1)(7x - 1)$.

$\therefore$ L.C.M. $= (3x - 2)(2x + 1)(7x - 1)$.

2. $x^3 - 1 = (x + 1)(x - 1)$,
$x^3 + 2x - 3 = (x + 3)(x - 1)$,
$6x^2 - x - 2 = (3x - 2)(2x + 1)$.

$\therefore$ L.C.M. $= (2x + 1)(3x - 2)(x - 1)(x + 1)(x + 3)$

3. $x^3 - 27 = (x - 3)(x^2 + 3x + 9)$,
$x^2 - 15x + 36 = (x - 3)(x - 12)$,
$x^3 - 3x^2 - 2x + 6 = x^2(x - 3) - 2(x - 3)$
$= (x^2 - 2)(x - 3)$.

$\therefore$ L.C.M. $= (x - 3)(x - 12)(x^2 - 2)(x^2 + 3x + 9)$.

4. $5x^2 + 19x - 4 = (5x - 1)(x + 4)$,
$10x^2 + 13x - 3 = (5x - 1)(2x + 3)$.

$\therefore$ L.C.M. $= (5x - 1)(x + 4)(2x + 3)$.

5. $12x^2 + xy - 6y^2 = (4x + 3y)(3x - 2y)$,
$18x^2 + 18xy - 20y^2 = (3x - 2y)(6x + 10y)$.

$\therefore$ L.C.M. $= (4x + 3y)(3x - 2y)(6x + 10y)$.

6.

$x)x^4 - 2x^3 + x$	$2)2x^4 - 2x^3 - 2x - 2$	
$x^3 - 2x^2 + 1$	$x^4 - x^3 - x - 1$	x
$x^3 - 2x - 1$	$x^4 - 2x^3 + x$	
$-2)-2x^2 + 2x + 2$	$x^3 - 2x - 1$	1
$x^2 - x - 1$	$x^3 - x^2 - x$	$x + 1$
	$x^3 - x - 1$	
	$x^2 - x - 1$	

Hence, $x^4 - 2x^3 + x = (x^2 - x - 1) \times x(x - 1)$,
and $2x^4 - 2x^3 - 2x - 2 = (x^2 - x - 1) \times 2(x + 1)$.

$\therefore$ L.C.M. $= 2x(x^2 - x - 1)(x + 1)(x - 1)$.

7. $12x^2 + 2x - 4 = (6x + 4)(2x - 1) = 2(3x + 2)(2x - 1)$,
$12x^2 - 42x - 24 = (6x + 3)(2x - 8) = 6(2x + 1)(x - 4)$,
$12x^2 - 28x - 24 = (6x + 4)(2x - 6) = 4(3x + 2)(x - 3)$.

$\therefore$ L.C.M. $= 12(3x + 2)(2x - 1)(2x + 1)(x - 4)(x - 3)$.

8. $x^3-6x^2+11x-6$ | $x^3-9x^2+26x-24$ | 1

x^3-5x^2+6x | $x^3-6x^2+11x-6$

$-x^2+5x-6$ | $-3)-3x^2+15x-18$

$-x^2+5x-6$ | x^2-5x+6 | $x-1$

x^2-5x+6 | $x^3-8x^2+19x-12$ | $x-3$

x^2-3x | x^3-5x^2+6x

$-2x+6$ | $-3x^2+13x-12$

$-2x+6$ | $-3x^2+15x-18$

$-2)-2x+6$

$x-3$ | $x-2$

Hence, $x^3-6x^2+11x-6=(x-1)(x-2)(x-3)$,
$x^3-9x^2+26x-24=(x-2)(x-3)(x-4)$,
$x^3-8x^2+19x-12=(x-1)(x-3)(x-4)$.

$\therefore$ L.C.M. $=(x-1)(x-2)(x-3)(x-4)$.

9. $x^2-4a^2=(x+2a)(x-2a)$,
$x^3+2ax^2+4a^2x+8a^3=x^2(x+2a)+4a^2(x+2a)$
$=(x^2+4a^2)(x+2a)$,
$x^3-2ax^2+4a^2x-8a^3=x^2(x-2a)+4a^2(x-2a)$
$=(x^2+4a^2)(x-2a)$.

$\therefore$ L.C.M. $=(x+2a)(x-2a)(x^2+4a^2)$.

10. $x^3+2x^2y-xy^2-2y^3=x^2(x+2y)-y^2(x+2y)$
$=(x^2-y^2)(x+2y)$,
$x^3-2x^2y-xy^2+2y^3=x^2(x-2y)-y^2(x-2y)$
$=(x^2-y^2)(x-2y)$.

$\therefore$ L.C.M. $=(x^2-y^2)(x+2y)(x-2y)$.

11. $1+p+p^2=1+p+p^2$,
$1-p+p^2=1-p+p^2$,
$1+p^2+p^4=(1+p+p^2)(1-p+p^2)$.

$\therefore$ L.C.M. $=1+p^2+p^4$.

12. $1-a=1-a$,
$(1-a)^2=(1-a)(1-a)$,
$(1-a)^3=(1-a)(1-a)(1-a)$.

$\therefore$ L.C.M. $=(1-a)^3$.

13. $(a+c)^2-b^2=(a+b+c)(a-b+c)$,
$(a+b)^2-c^2=(a+b+c)(a+b-c)$,
$(b+c)^2-a^2=(a+b+c)(-a+b+c)$.

$\therefore$ L.C.M. $=(a+b+c)(a+b-c)(a-b+c)(-a+b+c)$.

14. $c)\underline{4c^3 - c^2y - 3cy^2}$ | $\underline{3c^3 - 3c^2y + cy^2 - y^3}$

$\underline{4c^3 - cy - 3y^2}$ | $\underline{4}$

9 | $\underline{12c^3 - 12c^2y + 4cy^2 - 4y^3}$ $3c$

$\underline{36c^2 - 9cy - 27y^2}$ | $\underline{12c^3 - 3c^2y - 9cy^2}$

$\underline{36c^2 - 52cy + 16y^2}$ | $-y)\underline{-9c^2y + 13cy^2 - 4y^3}$ 4

$43y)\underline{43cy - 43y^2}$ | $\underline{9c^2 - 13cy + 4y^2}$ $9c - 4y$

$c - y$ | $\underline{9c^2 - 9cy}$

| $-4cy + 4y^2$

| $\underline{-4cy + 4y^2}$

Hence $4c^3 - c^2y - 3cy^2 = (c - y)(4c^2 + 3cy)$,

$3c^3 - 3c^2y + cy^2 - y^3 = (c - y)(3c^2 + y^2)$.

$\therefore$ L. C. M. $= c(c - y)(4c + 3y)(3c^2 + y^2)$.

15. $m^3 - 8m + 3 = (m + 3)(m^2 - 3m + 1)$,

$m^6 + 3m^5 + m + 3 = m^5(m + 3) + (m + 3)$

$= (m^5 + 1)(m + 3)$.

$\therefore$ L. C. M. $= (m + 3)(m^2 - 3m + 1)(m^5 + 1)$.

16. $20n^4 + n^2 - 1 = (5n^2 - 1)(4n^2 + 1)$,

$25n^4 + 5n^3 - n - 1 = (5n^2 - 1)(5n^2 + n + 1)$

$\therefore$ L. C. M. $= (5n^2 - 1)(4n^2 + 1)(5n^2 + n + 1)$.

17. $4b^3 - 12b^2 + 9b - 1$ | $b^4 - 2b^3 + b^2 - 8b + 8$

7 | $\underline{4}$

$\underline{28b^3 - 84b^2 + 63b - 7}$ | $\underline{4b^4 - 8b^3 + 4b^2 - 32b + 32}$ $b + 1$

$\underline{28b^3 - 160b^2 + 132b}$ | $\underline{4b^4 - 12b^3 + 9b^2 - b}$

$76b^2 - 69b - 7$ | $4b^3 - 5b^2 - 31b + 32$

7 | $\underline{4b^3 - 12b^2 + 9b - 1}$

$\underline{532b^2 - 483b - 49}$ | $7b^2 - 40b + 33$ $4b + 76$

$\underline{532b^2 - 3040b + 2508}$ | $\underline{7b^2 - 7b}$

$2557)\underline{2557b - 2557}$ | $-33b + 33$ $7b - 33$

$b - 1$ | $\underline{-33b + 33}$

Hence, $4b^3 - 12b^2 + 9b - 1 = (b - 1)(4b^2 - 8b + 1)$,

$b^4 - 2b^3 + b^2 - 8b + 8 = (b - 1)(b^3 - b^2 - 8)$.

$\therefore$ L. C. M. $= (b - 1)(4b^2 - 8b + 1)(b^3 - b^2 - 8)$.

18.

$2r)\underline{2r^5 - 8r^4 + 12r^3 - 8r^2 + 2r}$ | $3r)\underline{3r^5 - 6r^3 + 3r}$ | Reserve r.

$\underline{r^4 - 4r^3 + 6r^2 - 4r + 1}$ | $\underline{r^4 - 2r^2 + 1}$ | 1

$\underline{r^4 - 2r^3 + 1}$ | $\underline{r^4 - 2r^3 + r^2}$ | $r^2 + 2r + 1$

$-4r)\underline{-4r^3 + 8r^2 - 4r}$ | $\underline{2r^3 - 3r^2 + 1}$

$\underline{r^2 - 2r + 1}$ | $\underline{2r^3 - 4r^2 + 2r}$

| $r^2 - 2r + 1$

| $\underline{r^2 - 2r + 1}$

Hence. $2r^5 - 8r^4 + 12r^3 - 8r^2 + 2r = 2r(r - 1)^4$,

$3r^5 - 6r^3 + 3r = 3r(r^2 - 1)^2$.

$\therefore$ L. C. M. $= 6r(r - 1)^4(r + 1)^2$.

Exercise 46.

1. $\dfrac{x^2-1}{4x(x+1)}$

$= \dfrac{(x+1)(x-1)}{4x(x+1)}$

$= \dfrac{x-1}{4x}.$

2. $\dfrac{x^2-9x+20}{x^2-7x+12}$

$= \dfrac{(x-5)(x-4)}{(x-3)(x-4)}$

$= \dfrac{x-5}{x-3}.$

3. $\dfrac{x^2-2x-3}{x^2-10x+21}$

$= \dfrac{(x-3)(x+1)}{(x-7)(x-3)}$

$= \dfrac{x+1}{x-7}.$

4. $\dfrac{x^4+x^2+1}{x^2+x+1}$

$= \dfrac{(x^2+x+1)(x^2-x+1)}{x^2+x+1}$

$= x^2-x+1.$

5. $\dfrac{x^6+2x^3y^3+y^6}{x^6-y^6}$

$= \dfrac{(x^3+y^3)(x^3+y^3)}{(x^3+y^3)(x^3-y^3)}$

$= \dfrac{x^3+y^3}{x^3-y^3}.$

6. $\dfrac{a^3+1}{a^3+2a^2+2a+1}$

$= \dfrac{(a+1)(a^2-a+1)}{(a+1)(a^2+a+1)}$

$= \dfrac{a^2-a+1}{a^2+a+1}.$

7. $\dfrac{a^2-a-20}{a^2+a-12}$

$= \dfrac{(a-5)(a+4)}{(a-3)(a+4)}$

$= \dfrac{a-5}{a-3}.$

8.

$x^3-4x^2+9x-10$	$x^3+2x^2-3x+20$	1
$x^3+2x^2-3x+20$	x^3-2x^2+5x	x
$-6)-6x^2+12x-30$	$4x^2-8x+20$	
x^2-2x+5	$4x^2-8x+20$	4

$\therefore$ H.C.F. $= x^2-2x+5.$

$\therefore \dfrac{x^3-4x^2+9x-10}{x^3+2x^2-3x+20} = \dfrac{(x^2-2x+5)(x-2)}{(x^2-2x+5)(x+4)} = \dfrac{x-2}{x+4}.$

9. $x^3-5x^2+11x-15$ | x^3-x^2+3x+5 | 1
x^3-2x^2+5x | $x^3-5x^2+11x-15$
$-3x^2+6x-15$ | $4)4x^2-8x+20$
$-3x^2+6x-15$ | x^2-2x+5 | $x-3$

$\therefore$ H.C.F. $= x^2-2x+5$.

$\therefore \dfrac{x^3-5x^2+11x-15}{x^3-x^2+3x+5} = \dfrac{(x-3)(x^2-2x+5)}{(x+1)(x^2-2x+5)} = \dfrac{x-3}{x+1}$.

10.

$x^4-x^3y-xy^3-y^4$ | $x^4+x^3y+xy^3-y^4$ | 1
$x^4+x^2y^2$ | $x^4-x^3y-xy^3-y^4$
$-x^3y-x^2y^2-xy^3-y^4$ | $2xy)2x^3y+2xy^3$
$-x^3y \quad -xy^3$ | x^2+y^2 | x^2
$-x^2y^2 \quad -y^4$ | | $-xy$
$-x^2y^2 \quad -y^4$ | | $-y^2$

$\therefore$ H.C.F. $= x^2+y^2$.

$\therefore \dfrac{x^4+x^3y+xy^3-y^4}{x^4-x^3y-xy^3-y^4} = \dfrac{(x^2+y^2)(x^2+xy-y^2)}{(x^2+y^2)(x^2-xy-y^2)} = \dfrac{x^2+xy-y^2}{x^2-xy-y^2}$.

11. a^3-3a+2 | a^3+4a^2-5 | 1
4 | a^3-3a+2
$4a^3 \quad -12a+8$ | $4a^2+3a-7$ | a
$4a^3+3a^2-7a$ | -3
$-3a^2-5a+8$ | $-12a^2-9a+21$ | 4
$-3a^2+3a$ | $-12a^2-20a+32$
$-8a+8$ | $11)11a-11$
$-8a+8$ | $a-1$ | $-3a$
$\therefore$ H.C.F. $= a-1$. | | -8

$\therefore \dfrac{a^3+4a^2-5}{a^3-3a+2} = \dfrac{(a-1)(a^2+5a+5)}{(a-1)(a^2+a-2)} = \dfrac{a^2+5a+5}{a^2+a-2}$

12. x^3+x^2-x-1 | $3x^2+2x-1$ | x
3 | $3x^2-6x-9$ | 3
$3x^3+3x^2-3x-3$ | $8)8x+8$
$3x^3+2x^2-x$ | $x+1$ | $x-3$
x^2-2x-3
x^2+x
$-3x-3$
$-3x-3$

$\therefore$ H.C.F. $= x+1$.

$\therefore \dfrac{3x^2+2x-1}{x^3+x^2-x-1} = \dfrac{(x+1)(3x-1)}{(x+1)(x^2-1)} = \dfrac{3x-1}{x^2-1}$.

13.
$$\begin{array}{r|l} x^3-x^2-2x+2 & x^3-3x^2+4x-2 \\ \underline{x^3-3x^2+2x} & \underline{x^3-x^2-2x+2} \\ 2x^2-4x+2 & -2)-2x^2+6x-4 \\ \underline{2x^2-6x+4} & \underline{x^2-3x+2} \\ 2)\,2x-2 & \underline{x^2-x} \\ \underline{x-1} & -2x+2 \\ & \underline{-2x+2} \end{array} \quad \begin{array}{|l} 1 \\ \\ x \\ 2 \\ \\ \\ x-2 \end{array}$$

$\therefore$ H. C. F. $= x-1$.

$$\therefore \frac{x^3-3x^2+4x-2}{x^3-x^2-2x+2} = \frac{(x-1)(x^2-2x+2)}{(x-1)(x^2-2)} = \frac{x^2-2x+2}{x^2-2}.$$

14.
$$\frac{4x^2-12ax+9a^2}{8x^3-27a^3} = \frac{(2x-3a)(2x-3a)}{(2x-3a)(4x^2+6ax+9a^2)} = \frac{2x-3a}{4x^2+6ax+9a^2}.$$

16.
$$\frac{a^2-b^2-2bc-c^2}{a^2+2ab+b^2-c^2} = \frac{a^2-(b^2+2bc+c^2)}{(a^2+2ab+b^2)-c^2} = \frac{(a+b+c)(a-b-c)}{(a+b+c)(a+b-c)} = \frac{a-b-c}{a+b-c}.$$

15.
$$\frac{15a^2+ab-2b^2}{9a^2+3ab-2b^2} = \frac{(5a+2b)(3a-b)}{(3a+2b)(3a-b)} = \frac{5a+2b}{3a+2b}.$$

17.
$$\frac{x^4-x^2-2x+2}{2x^3-x-1} = \frac{(x-1)(x^3+x^2-2)}{(x-1)(2x^2+2x+1)} = \frac{x^3+x^2-2}{2x^2+2x+1}.$$

18.
$$\begin{array}{r|l} x^3-2x^2-x+2 & x^3-6x^2+11x-6 \\ \underline{x^2-3x^2+2x} & \underline{x^3-2x^2-x+2} \\ x^2-3x+2 & -4)-4x^2+12x-8 \\ \underline{x^2-3x+2} & \underline{x^2-3x+2} \\ & 0 \end{array} \quad \begin{array}{|l} 1 \\ \\ \\ \\ x+1 \end{array}$$

$\therefore$ H. C. F. $= x^2-3x+2$.

$$\therefore \frac{x^3-6x^2+11x-6}{x^3-2x^2-x+2} = \frac{(x^2-3x+2)(x-3)}{(x^2-3x+2)(x+1)} = \frac{x-3}{x+1}.$$

19.
$$\begin{array}{r|l} 6x^3-17x^2+11x-2 & 6x^3-23x^2+16x-3 \\ \underline{6x^3-5x^2+x} & \underline{6x^3-17x^2+11x-2} \\ -12x^2+10x-2 & -1)-6x^2+5x-1 \\ \underline{-12x^2+10x-2} & \underline{6x^2-5x+1} \\ & 0 \end{array} \quad \begin{array}{|l} 1 \\ \\ \\ x-2 \end{array}$$

$$\therefore \frac{6x^3-23x^2+16x-3}{6x^3-17x^2+11x-2} = \frac{(6x^2-5x+1)(x-3)}{(6x^2-5x+1)(x-2)} = \frac{x-3}{x-2}$$

20. $\dfrac{x^4-x^3-x+1}{x^4-2x^3-x^2-2x+1}$

$=\dfrac{x^3(x-1)-(x-1)}{(x^2+x+1)(x^2-3x+1)}$

$=\dfrac{(x^3-1)(x-1)}{(x^2+x+1)(x^2-3x+1)}$

$=\dfrac{(x-1)(x^2+x+1)(x-1)}{(x^2-3x+1)(x^2+x+1)}$

$=\dfrac{(x-1)^2}{x^2-3x+1}$

21. *a)* $a^4-a^3b-a^2b^2+ab^3 \;\big|\; a^3-a^2b-ab^2+b^3$

$a^5-a^4b-ab^4+b^5 \;\big|\; a^2+b^2$

$a^5-a^4b-a^3b^2+a^2b^3$

$a^3b^2-a^2b^3-ab^4+b^5$

$a^3b^2-a^2b^3-ab^4+b^5$

$\therefore$ H.C.F. $=a^3-a^2b-ab^2+b^3$.

$\therefore \dfrac{a^5-a^4b-ab^4+b^5}{a^4-a^3b-a^2b^2+ab^3}=\dfrac{(a^2+b^2)(a^3-a^2b-ab^2+b^3)}{a(a^3-a^2b-ab^2+b^3)}=\dfrac{a^2+b^2}{a}$.

22. $\dfrac{(a+b)^2}{a^2-ab-2b^2}$

$=\dfrac{(a+b)(a+b)}{(a-2b)(a+b)}$

$=\dfrac{a+b}{a-2b}$.

23. $\dfrac{3ab(a^2-b^2)}{4(a^2b-ab^2)^2}$

$=\dfrac{3ab(a+b)(a-b)}{4a^2b^2(a-b)(a-b)}$

$=\dfrac{3(a+b)}{4ab(a-b)}$.

24. $\dfrac{a^2+2ab+b^2-c^2}{a^2+ab-ac}$

$=\dfrac{(a^2+2ab+b^2)-c^2}{a^2+ab-ac}$

$=\dfrac{(a+b+c)(a+b-c)}{a(a+b-c)}$

$=\dfrac{a+b+c}{a}$.

25. $\dfrac{6x^3-11x^2y+3xy^2}{6x^2y-5xy^2-6y^3}$

$=\dfrac{x(6x^2-11xy+3y^2)}{y(6x^2-5xy-6y^2)}$

$=\dfrac{x(2x-3y)(3x-y)}{y(2x-3y)(3x+2y)}$

$=\dfrac{x(3x-y)}{y(3x+2y)}$.

26. $\dfrac{a^2-(b+c+d)^2}{(a-b)^2-(c+d)^2}$

$=\dfrac{(a+b+c+d)(a-b-c-d)}{(a-b+c+d)(a-b-c-d)}$

$=\dfrac{a+b+c+d}{a-b+c+d}$.

27. $\dfrac{6x^2-5x-6}{8x^2-2x-15}$

$=\dfrac{(3x+2)(2x-3)}{(4x+5)(2x-3)}$

$=\dfrac{3x+2}{4x+5}$.

28. $\dfrac{x^4+x^2y^2+y^4}{(x-y)(x^3-y^3)}$
$=\dfrac{(x^2+xy+y^2)(x^2-xy+y^2)}{(x-y)(x-y)(x^2+xy+y^2)}$
$=\dfrac{x^2-xy+y^2}{(x-y)^2}$.

29. $\dfrac{x^6+y^6}{x^4-x^2y^2+y^4}$
$=\dfrac{(x^2+y^2)(x^4-x^2y^2+y^4)}{x^4-x^2y^2+y^4}$
$=x^2+y^2$.

30. $\dfrac{(a^3+b^3)(a^2+ab+b^2)}{(a^3-b^3)(a^2-ab+b^2)}$
$=\dfrac{(a+b)(a^2-ab+b^2)(a^2+ab+b^2)}{(a-b)(a^2+ab+b^2)(a^2-ab+b^2)}$
$=\dfrac{a+b}{a-b}$.

Exercise 47.

1. $\dfrac{x^2-2x+1}{x-1}=x-1$.

2.
$$\begin{array}{r|l} 3x^2+2x+1 & x+4 \\ \hline 3x^2+12x & 3x-10 \\ \hline -10x+1 & \\ -10x-40 & \\ \hline +41 & \end{array}$$
$\therefore \dfrac{3x^2+2x+1}{x+4}=3x-10+\dfrac{41}{x+4}$.

3.
$$\begin{array}{r|l} 3x^2+6x+5 & x+4 \\ \hline 3x^2+12x & 3x-6 \\ \hline -6x+5 & \\ -6x-24 & \\ \hline +29 & \end{array}$$
$\therefore \dfrac{3x^2+6x+5}{x+4}=3x-6+\dfrac{29}{x+4}$.

4.
$$\begin{array}{r|l} a^2-ax+x^2 & a+x \\ \hline a^2+ax & a-2x \\ \hline -2ax+x^2 & \\ -2ax-2x^2 & \\ \hline +3x^2 & \end{array}$$
$\therefore \dfrac{a^2-ax+x^2}{a+x}=a-2x+\dfrac{3x^2}{a+x}$.

5.
$$\begin{array}{r|l} 2x^2+5 & x-3 \\ \hline 2x^2-6x & 2x+6 \\ \hline 6x+5 & \\ 6x-18 & \\ \hline +23 & \end{array}$$
$\therefore \dfrac{2x^2+5}{x-3}=2x+6+\dfrac{23}{x-3}$.

6.
$$\begin{array}{r|l} 10a^2-17ax+10x^2 & 5a-x \\ \hline 10a^2-2ax & 2a-3x \\ \hline -15ax+10x^2 & \\ -15ax+3x^2 & \\ \hline +7x^2 & \end{array}$$
$\therefore \dfrac{10a^2-17ax+10x^2}{5a-x}=2a-3x+\dfrac{7x^2}{5a-x}$.

7.
$$\begin{array}{r|l} 48x^2+16 & 4x-1 \\ \hline 48x^2-12x & 12x+3 \\ \hline 12x+16 & \\ 12x-3 & \\ \hline +19 & \end{array}$$
$\therefore \dfrac{48x^2+16}{4x-1}=12x+3+\dfrac{19}{4x-1}$.

8. $2x^2-5x-2 \mid x-4$
$2x^2-8x \quad\quad 2x+3$
$3x-2$
$3x-12$
$+10$

$\therefore \frac{2x^2-5x-2}{x-4}=2x+3+\frac{10}{x-4}$

9. $a^2+b^2 \mid a-b$
$a^2-ab \quad\quad a+b$
$ab+b^2$
$ab-b^2$
$+2b^2$

$\therefore \frac{a^2+b^2}{a-b}=a+b+\frac{2b^2}{a-b}$.

10. $5x^3-x^2+5 \mid 5x^2+4x-1$
$5x^3+4x^2-x \quad\quad x-1$
$-5x^2+x+5$
$-5x^2-4x+1$
$+5x+4$

$\therefore \frac{5x^3-x^2+5}{5x^2+4x-1}=x-1+\frac{5x+4}{5x^2+4x-1}$.

Exercise 48.

1. $1-\frac{x-y}{x+y}$
$=\frac{x+y-(x-y)}{x+y}$
$=\frac{x+y-x+y}{x+y}$
$=\frac{2y}{x+y}$.

2. $1+\frac{x-y}{x+y}$
$=\frac{x+y+(x-y)}{x+y}$
$=\frac{x+y+x-y}{x+y}$
$=\frac{2x}{x+y}$.

3. $3x-\frac{1+2x^2}{x}$
$=\frac{3x^2-(1+2x^2)}{x}$
$=\frac{3x^2-1-2x^2}{x}$
$=\frac{x^2-1}{x}$.

4. $a-x+\frac{a^2+x^2}{a-x}$
$=\frac{a^2-2ax+x^2+(a^2+x^2)}{a-x}$
$=\frac{2(a^2-ax+x^2)}{a-x}$.

5. $5a-2b-\frac{3a^2-4b^2}{5a-6b}$
$=\frac{25a^2-40ab+12b^2-(3a^2-4b^2)}{5a-6b}$
$=\frac{22a^2-40ab+16b^2}{5a-6b}$

6. $a+b-\frac{a^2+b^2}{a+b}$
$=\frac{a^2+2ab+b^2-(a^2+b^2)}{a+b}$
$=\frac{2ab}{a+b}$.

7. $7a-\frac{2-3a+4a^2}{5-6a}$
$=\frac{35a-42a^2-(2-3a+4a^2)}{5-6a}$
$=\frac{38a-46a^2-2}{5-6a}$

8. $3x - \dfrac{5ax-3}{2a}$

$= \dfrac{6ax-(5ax-3)}{2a}$

$= \dfrac{ax+3}{2a}$.

9. $\dfrac{a+b}{a-b} + 1$

$= \dfrac{a+b+(a-b)}{a-b}$

$= \dfrac{2a}{a-b}$.

10. $\dfrac{a-b}{a+b} - 1$

$= \dfrac{a-b-(a+b)}{a+b}$

$= \dfrac{-2b}{a+b}$.

11. $\dfrac{2x^2}{x+y} - (x+y)$

$= \dfrac{2x^2-(x^2+2xy+y^2)}{x+y}$

$= \dfrac{x^2-2xy-y^2}{x+y}$.

12. $\dfrac{5a-12x}{4} + 6a + 3x$

$= \dfrac{5a-12x+24a+12x}{4}$

$= \dfrac{29a}{4}$.

13. $a - 1 + \dfrac{1}{a+1}$

$= \dfrac{a^2-1+1}{a+1}$

$= \dfrac{a^2}{a+1}$.

14. $x + 5 - \dfrac{2x-15}{x-3}$

$= \dfrac{x^2+2x-15-2x+15}{x-3}$

$= \dfrac{x^2}{x-3}$.

15. $2a - b - \dfrac{2ab}{a+b}$

$= \dfrac{2a^2+ab-b^2-2ab}{a+b}$

$= \dfrac{2a^2-ab-b^2}{a+b}$.

16. $3x - 10 + \dfrac{41}{x+4}$

$= \dfrac{3x^2+2x-40+41}{x+4}$

$= \dfrac{3x^2+2x+1}{x+4}$.

17. $x^2 + x + 1 + \dfrac{2}{x-1}$

$= \dfrac{x^3-1+2}{x-1}$

$= \dfrac{x^3+1}{x-1}$.

18. $x^3 - 3x - \dfrac{3x(3-x)}{x-2}$

$= \dfrac{x^4-2x^3-3x^2+6x-9x+3x^2}{x-2}$

$= \dfrac{x^4-2x^3-3x}{x-2}$

$= \dfrac{x(x^3-2x^2-3)}{x-2}$.

19. $a^2 - 2ax + 4x^2 - \dfrac{6x^3}{a+2x}$

$= \dfrac{a^3+8x^3-6x^3}{a+2x}$

$= \dfrac{a^3+2x^3}{a+2x}$.

20. $x - a + y + \dfrac{a^2 - ay + y^2}{x + a}$

$= \dfrac{x^2 - a^2 + xy + ay + a^2 - ay + y^2}{x + a}$

$= \dfrac{x^2 + xy + y^2}{x + a}$.

EXERCISE 49.

1. $\dfrac{3x-7}{6}, \dfrac{4x-9}{18}$.

L.C.D. = 18.

The multipliers are 3 and 1 respectively.

$\dfrac{3x-7}{6} = \dfrac{9x-21}{18}$;

$\dfrac{4x-9}{18} = \dfrac{4x-9}{18}$.

2 $\dfrac{2x-4y}{5x^2}, \dfrac{3x-8y}{10x}$.

L.C.D. = $10x^2$.

The multipliers are 2 and x respectively.

$\dfrac{2x-4y}{5x^2} = \dfrac{4x-8y}{10x^2}$;

$\dfrac{3x-8y}{10x} = \dfrac{3x^2-8xy}{10x^2}$.

3. $\dfrac{4a-5c}{5ac}, \dfrac{3a-2c}{12a^2c}$.

L.C.D. = $60a^2c$.

The multipliers are $12a$ and 5 respectively.

$\dfrac{4a-5c}{5ac} = \dfrac{48a^2-60ac}{60a^2c}$;

$\dfrac{3a-2c}{12a^2c} = \dfrac{15a-10c}{60a^2c}$

4. $\dfrac{5}{1-x}, \dfrac{6}{1-x^2}$.

L.C.D. = $1 - x^2$.

The multipliers are $1+x$ and 1.

$\dfrac{5}{1-x} = \dfrac{5+5x}{1-x^2}$;

$\dfrac{6}{1-x^2} = \dfrac{6}{1-x^2}$.

5. $\dfrac{1}{(a-b)(b-c)}, \dfrac{1}{(a-b)(a-c)}$.

L.C.D. = $(a-b)(a-c)(b-c)$.

The multipliers are $a-c$ and $b-c$.

$\dfrac{1}{(a-b)(b-c)} = \dfrac{a-c}{(a-b)(a-c)(b-c)}$;

$\dfrac{1}{(a-b)(a-c)} = \dfrac{b-c}{(a-b)(a-c)(b-c)}$.

6. $\frac{4x^2}{3(a+b)}, \frac{xy}{6(a^2-b^2)}$.

L. C. D. $= 6(a^2-b^2)$.

The multipliers are $2(a-b)$ and 1.

$$\frac{4x^2}{3(a+b)} = \frac{8x^2(a-b)}{6(a^2-b^2)};$$

$$\frac{xy}{6(a^2+b^2)} = \frac{xy}{6(a^2-b^2)}.$$

7. $\frac{8x+2}{x-2}, \frac{2x-1}{3x-6}, \frac{3x+2}{5x-10}$

L. C. D. $= 15(x-2)$.

The multipliers are 15, 5, and 3.

$$\frac{8x+2}{x-2} = \frac{30(4x+1)}{15(x-2)};$$

$$\frac{2x-1}{3x-6} = \frac{5(2x-1)}{15(x-2)};$$

$$\frac{3x+2}{5x-10} = \frac{3(3x+2)}{15(x-2)}.$$

8. $\frac{a-bm}{mx}, 1, \frac{c-bn}{nx}$.

L. C. D. $= mnx$.

The multipliers are n, mnx, and m.

$$\frac{a-bm}{mx} = \frac{an-bmn}{mnx};$$

$$1 = \frac{mnx}{mnx};$$

$$\frac{c-bn}{nx} = \frac{cm-bmn}{mnx}.$$

Exercise 50.

1. $\frac{3x-2y}{5x} + \frac{5x-7y}{10x} + \frac{8x+2y}{25}$.

L. C. D. $= 50x$.

The multipliers are 10, 5, and $2x$.

$$\begin{aligned} 30x \quad & -20y = \text{first numerator},\\ 25x \quad & -35y = \text{second numerator},\\ 16x^2 \quad & +4xy = \text{third numerator}.\\ \hline 16x^2 + 55x + 4xy - 55y &= \text{sum of numerators}. \end{aligned}$$

$\therefore$ Sum of fractions $= \frac{16x^2+55x+4xy-55y}{50x}$.

2. $\frac{4x^2-7y^2}{3x^2}+\frac{3x-8y}{6x}+\frac{5-2y}{12}$.

L. C. D. $=12x^2$.

The multipliers are 4, $2x$, and x^2.

$16x^2 \qquad -28y^2$ = first numerator,
$6x^2 \quad -16xy$ = second numerator,
$5x^2-2x^2y$ = third numerator.
$27x^2-2x^2y-16xy-28y^2$ = sum of numerators.

$\therefore$ Sum of fractions $=\frac{27x^2-2x^2y-16xy-28y^2}{12x^2}$.

3. $\frac{4a^2+5b^2}{2b^2}+\frac{3a+2b}{5b}+\frac{7-2a}{9}$.

L. C. D. $=90b^2$.

The multipliers are 45, $18b$, and $10b^2$.

$180a^2+225b^2$ = first numerator,
$36b^2+54ab$ = second numerator,
$70b^2 \quad -20ab^2$ = third numerator.
$180a^2+331b^2+54ab-20ab^2$ = sum of numerators.

$\therefore$ Sum of fractions $=\frac{180a^2+54ab-20ab^2+331b^2}{90b^2}$.

4. $\frac{4x+5}{3}-\frac{3x-7}{5x}+\frac{9}{12x^2}$.

L. C. D. $=60x^2$.

The multipliers are $20x^2$, $12x$, and 5.

$80x^3+100x^2$ = first numerator,
$-36x^2+84x$ = second numerator,
45 = third numerator.
$80x^3+64x^2+84x+45$ = sum of numerators.

$\therefore$ Sum of fractions $=\frac{80x^3+64x^2+84x+45}{60x^2}$.

5. $\frac{4x-3y}{7}+\frac{3x+7y}{14}-\frac{5x-2y}{21}+\frac{9x+2y}{42}$.

L. C. D. $=42$.

The multipliers are 6, 3, 2, and 1.

$24x-18y$ = first numerator,
$9x+21y$ = second numerator,
$-10x+4y$ = third numerator,
$9x+2y$ = fourth numerator.
$32x+9y$ = sum of numerators.

$\therefore$ Sum of fractions $=\frac{32x+9y}{42}$.

6. $\frac{3xy-4}{x^2y^2} - \frac{5y^2+7}{xy^3} - \frac{6x^2-11}{x^3y}$.

L. C. D. $= x^3y^3$.

$3x^3y^2 - 4xy$ = first numerator,
$-5x^2y^2 \quad -7x^3$ = second numerator,
$-6x^2y^2 + 11y^3$ = third numerator.
$-8x^2y^2 - 4xy + 11y^3 - 7x^3$ = sum of numerators.

$\therefore$ Sum of fractions $= \frac{11y^3 - 4xy - 8x^2y^2 - 7x^3}{x^3y^3}$.

7. $\frac{a^2-2ac+c^2}{a^2c^2} - \frac{b^2-2bc+c^2}{b^2c^2}$.

L. C. D. $= a^2b^2c^2$.

$a^2b^2 - 2ab^2c \quad +b^2c^2$ = first numerator,
$-a^2b^2 \quad +2a^2bc \quad -a^2c^2$ = second numerator,
$-2ab^2c + 2a^2bc + b^2c^2 - a^2c^2$ = sum of numerators.

$\therefore$ Sum of fractions $= \frac{b^2c^2 - 2ab^2c + 2a^2bc - a^2c^2}{a^2b^2c^2}$.

8. $\frac{5a^3-2}{8a^2} - \frac{3a^2-a}{8}$.

L. C. D. $= 8a^2$.

$5a^3 \quad -2$ = first numerator,
$a^3 - 3a^4$ = second numerator.
$6a^3 - 3a^4 - 2$ = sum of numerators.

$\therefore$ Sum of fractions $= \frac{6a^3 - 3a^4 - 2}{8a^2}$.

9. $\frac{a-b}{c} + \frac{b-c}{a} + \frac{c-a}{b} + \frac{ab^2+bc^2+ca^2}{abc}$.

L. C. D. $= abc$.

$a^2b \quad -ab^2$ = first numerator,
$b^2c \quad -bc^2$ = second numerator,
$ac^2 \quad -a^2c$ = third numerator,
$ab^2 + bc^2 + a^2c$ = fourth numerator.
$a^2b + b^2c + ac^2$ = sum of numerators.

$\therefore$ Sum of fractions $= \frac{a^2b + b^2c + ac^2}{abc}$.

10. $\frac{1}{2x^2y} - \frac{1}{6y^2z} - \frac{1}{2xz^2} + \frac{2x-z}{4x^2z^2} + \frac{y-2z}{4x^2yz}$.

L. C. D. $= 12x^2y^2z^2$.

$6yz^2$ = first numerator,
$-2x^2z$ = second numerator,
$-6xy^2$ = third numerator,
$6xy^2 - 3y^2z$ = fourth numerator,
$-6yz^2 + 3y^2z$ = fifth numerator.
$-2x^2z$ = sum of numerators.

$\therefore$ Sum of fractions $= -\frac{2x^2z}{12x^2y^2z^2} = -\frac{1}{6y^2z}$

Exercise 51.

1. $\frac{1}{x-6} + \frac{1}{x+5}$.

L. C. D. $= (x-6)(x+5)$.

The multipliers are $x+5$ and $x-6$ respectively

$x+5$ = first numerator,
$x-6$ = second numerator.
$2x-1$ = sum of numerators.

$\therefore$ Sum of fractions $= \frac{2x-1}{x^2-x-30}$.

2. $\frac{1}{x-7} - \frac{1}{x-3}$.

L. C. D. $= (x-7)(x-3)$.

The multipliers are $x-3$ and $x-7$ respectively.

$x-3$ = first numerator,
$-x+7$ = second numerator.
4 = sum of numerators.

$\therefore$ Sum of fractions $= \frac{4}{x^2-10x+21}$.

3. $\frac{1}{1+x} + \frac{1}{1-x}$

L. C. D. $= 1-x^2$.

The multipliers are $1-x$ and $1+x$ respectively.

$1-x$ = first numerator,
$1+x$ = second numerator.
2 = sum of numerators.

$\therefore$ Sum of fractions $= \frac{2}{1-x^2}$.

4. $\frac{1}{1-x} - \frac{2}{1-x^2}$.

L. C. D. $= 1-x^2$.

The multipliers are $1+x$ and 1.

$1+x$ = first numerator,
-2 = second numerator.
$-1+x$ = sum of numerators.
$= -(1-x)$.

$\therefore$ Sum of fractions $= \frac{-(1-x)}{1-x^2} = -\frac{1}{1+x}$.

5. $\frac{1}{x-y} + \frac{x}{(x-y)^2}$.

L. C. D. $= (x-y)^2$.

The multipliers are $x-y$ and 1.

$x-y$ = first numerator,
x = second numerator.
$2x-y$ = sum of numerators.

$\therefore$ Sum of fractions $= \frac{2x-y}{(x-y)^2}$.

6. $\frac{1}{2a(a+x)} + \frac{1}{2a(a-x)}$.

L. C. D. $= 2a(a+x)(a-x)$.

The multipliers are $a-x$ and $a+x$.

$a-x$ = first numerator,
$a+x$ = second numerator.
$2a$ = sum of numerators.

$\therefore$ Sum of fractions $= \frac{2a}{2a(a+x)(a-x)} = \frac{1}{a^2-x^2}$.

7. $\frac{a}{(a+b)b} - \frac{b}{(a-b)a}$.

L. C. D. $= ab(a^2-b^2)$.

The multipliers are $a(a-b)$ and $b(a+b)$.

$a^3 - a^2b$ = first numerator,
$-ab^2 - b^3$ = second numerator.
$a^3 - a^2b - ab^2 - b^3$ = sum of numerators.

$\therefore$ Sum of fractions $= \frac{a^3 - a^2b - ab^2 - b^3}{ab(a^2-b^2)}$.

8. $\dfrac{5}{2x(x-1)} - \dfrac{3}{4x(x-2)}$.

L. C. D. $= 4x(x-1)(x-2)$.

The multipliers are $2(x-2)$ and $(x-1)$.

$10x - 20$ = first numerator,

$-3x + 3$ = second numerator.

$7x - 17$ = sum of numerators.

$\therefore$ Sum of fractions $= \dfrac{7x-17}{4x(x^2-3x+2)}$.

9. $\dfrac{1+x}{1+x+x^2} - \dfrac{1-x}{1-x+x^2}$.

L. C. D. $= 1 + x^2 + x^4$.

The multipliers are $1-x+x^2$ and $1+x+x^2$.

$1 + x^2$ = first numerator,

$-1 + x^2$ = second numerator.

$2x^2$ = sum of numerators.

$\therefore$ Sum of fractions $= \dfrac{2x^2}{1+x^2+x^4}$.

10. $\dfrac{2ax-3by}{2xy(x-y)} - \dfrac{2ax+3by}{2xy(x+y)}$.

L. C. D. $= 2xy(x^2-y^2)$.

The multipliers are $x+y$ and $x-y$.

$2ax^2 + 2axy - 3bxy - 3by^2$ = first numerator,

$-2ax^2 + 2axy - 3bxy + 3by^2$ = second numerator.

$4axy - 6bxy$ = sum of numerators.

or $2xy(2a-3b)$ = sum of numerators.

$\therefore$ Sum of fractions $= \dfrac{2a-3b}{x^2-y^2}$.

Exercise 52.

1. $\dfrac{1}{1+a} + \dfrac{1}{1-a} + \dfrac{2a}{1-a^2}$

L. C. D. $= 1 - a^2$

The multipliers are $1-a$, $1+a$, and 1.

$1 - a$ = first numerator,

$1 + a$ = second numerator,

$2a$ = third numerator.

$2 + 2a = 2(1+a)$ = sum of numerators.

$\therefore$ Sum of fractions $= \dfrac{2(1+a)}{(1+a)(1-a)} = \dfrac{2}{1-a}$

2. $\dfrac{1}{1-x}-\dfrac{1}{1+x}+\dfrac{2x}{1+x^2}$

L. C. D. $=(1-x)(1+x)(1+x^2)$.

$1+x+x^2+x^3=$ first numerator,
$-1+x-x^2+x^3=$ second numerator,
$2x\quad -2x^3=$ third numerator.
$4x\quad =$ sum of numerators.

$\therefore$ Sum of fractions $=\dfrac{4x}{1-x^4}$.

3. $\dfrac{x}{1-x}-\dfrac{x^3}{1-x}+\dfrac{x}{1+x^2}$.

L. C. D. $=(1-x)(1+x^2)$.

$x\quad +x^3\quad =$ first numerator,
$-x^2\quad -x^4=$ second numerator,
$x\quad -x^2\quad =$ third numerator.
$2x-2x^2+x^3-x^4=$ sum of numerators.
$=2x(1-x)+x^3(1-x)$.

$\therefore$ Sum of fractions $=\dfrac{(2x+x^3)(1-x)}{(1+x^2)(1-x)}=\dfrac{2x+x^3}{1+x^2}$.

4. $\dfrac{x}{y}+\dfrac{y}{x+y}+\dfrac{x^2}{x^2+xy}$.

L. C. D. $=xy(x+y)$.

$x^3+x^2y\quad =$ first numerator,
$+xy^2=$ second numerator,
$+x^2y\quad =$ third numerator.
$x^3+2x^2y+xy^2=$ sum of numerators.
$=x(x+y)^2$.

$\therefore$ Sum of fractions $=\dfrac{x(x+y)^2}{xy(x+y)}=\dfrac{x+y}{y}$.

5. $\dfrac{x-1}{x-2}+\dfrac{x-2}{x-3}+\dfrac{x-3}{x-4}$

L. C. D. $=(x-2)(x-3)(x-4)$.

$x^3-8x^2+19x-12=$ first numerator,
$x^3-8x^2+20x-16=$ second numerator,
$x^3-8x^2+21x-18=$ third numerator.
$3x^3-24x^2+60x-46=$ sum of numerators.

$\therefore$ Sum of fractions $=\dfrac{3x^3-24x^2+60x-46}{x^3-9x^2+26x-24}$.

6. $\dfrac{3}{x-a}+\dfrac{4a}{(x-a)^2}-\dfrac{5a^2}{(x-a)^3}$.

L. C. D. $=(x-a)^3$.

$3x^2-6ax+3a^2$ = first numerator,
$4ax-4a^2$ = second numerator,
$-5a^2$ = third numerator.
$3x^2-2ax-6a^2$ = sum of numerators.

$\therefore$ Sum of fractions $=\dfrac{3x^2-2ax-6a^2}{(x-a)^3}$

7. $\dfrac{1}{x-1}-\dfrac{1}{x+2}-\dfrac{3}{(x+1)(x+2)}$.

L. C. D. $=(x-1)(x+1)(x+2)$.

x^2+3x+2 = first numerator,
$-x^2+1$ = second numerator,
$-3x+3$ = third numerator.
6 = sum of numerators.

$\therefore$ Sum of fractions $=\dfrac{6}{(x^2-1)(x+2)}$.

8. $\dfrac{a-b}{(b+c)(c+a)}+\dfrac{b-c}{(c+a)(a+b)}+\dfrac{c-a}{(a+b)(b+c)}$.

L. C. D. $=(b+c)(a+b)(c+a)$.

a^2-b^2 = first numerator,
$+b^2-c^2$ = second numerator,
$-a^2+c^2$ = third numerator.
0 = sum of numerators.

$\therefore$ Sum of fractions $=0$.

9. $\dfrac{x-a}{x-b}+\dfrac{x-b}{x-a}-\dfrac{(a-b)^2}{(x-a)(x-b)}$.

L. C. D. $=(x-a)(x-b)$.

$x^2-2ax+a^2$ = first numerator,
$x^2-2bx+b^2$ = second numerator,
$-a^2+2ab-b^2$ = third numerator.
$2x^2-2bx+2ab-2ax$ = sum of numerators.
$=2(x-a)(x-b)$.

$\therefore$ Sum of fractions $=\dfrac{2(x-a)(x-b)}{(x-a)(x-b)}=2$.

10. $\dfrac{x+y}{y} - \dfrac{2x}{x+y} + \dfrac{x^2y - x^3}{y(x^2-y^2)}$.

L. C. D. $= y(x^2-y^2)$.

$x^3 - xy^2 + x^2y - y^3$ = first numerator,
$2xy^2 - 2x^2y$ = second numerator,
$-x^3 + x^2y$ = third numerator.
$xy^2 - y^3$ = sum of numerators.

$\therefore$ Sum of fractions $= \dfrac{y^2(x-y)}{y(x^2-y^2)} = \dfrac{y}{x+y}$.

11. $\dfrac{a+b}{(b-c)(c-a)} + \dfrac{b+c}{(c-a)(a-b)} + \dfrac{c+a}{(a-b)(b-c)}$.

L. C. D. $= (b-c)(c-a)(a-b)$.

$a^2 - b^2$ = first numerator,
$+ b^2 - c^2$ = second numerator,
$-a^2 + c^2$ = third numerator.
0 = sum of numerators.

$\therefore$ Sum of fractions $= 0$.

12. $\dfrac{a^2-bc}{(a+b)(a+c)} + \dfrac{b^2-ac}{(b+a)(b+c)} + \dfrac{c^2+ab}{(c+b)(c+a)}$.

L. C. D. $= (a+b)(b+c)(a+c)$.

$a^2b - b^2c + a^2c - bc^2$ = first numerator,
$ab^2 + b^2c - a^2c - ac^2$ = second numerator,
$a^2b + ac^2 + bc^2 + ab^2$ = third numerator.
$2a^2b + 2ab^2$ = sum of numerators.
$= 2ab(a+b)$.

$\therefore$ Sum of fractions $= \dfrac{2ab(a+b)}{(a+b)(b+c)(a+c)} = \dfrac{2ab}{(b+c)(a+c)}$.

13. $\dfrac{a}{a-x} - \dfrac{x}{a+2x} - \dfrac{a^2+x^2}{(a-x)(a+2x)}$.

L. C. D. $= (a-x)(a+2x)$.

$a^2 + 2ax$ = first numerator,
$- ax + x^2$ = second numerator,
$-a^2 - x^2$ = third numerator.
ax = sum of numerators.

$\therefore$ Sum of fractions $= \dfrac{ax}{(a-x)(a+2x)}$.

14. $\dfrac{3}{(a-b)(b-c)} - \dfrac{4}{(a-b)(a-c)} + \dfrac{6}{(a-c)(b-c)}$.

L. C. D. $= (a-b)(a-c)(b-c)$.

$3a \quad -3c$ = first numerator,
$-4b+4c$ = second numerator,
$6a \quad -6b \quad$ = third numerator.
$9a-10b \quad +c$ = sum of numerators.

$\therefore$ Sum of fractions $= \dfrac{9a-10b+c}{(a-b)(a-c)(b-c)}$.

15. $\dfrac{x-2y}{x(x-y)} - \dfrac{2x+y}{y(x+y)} - \dfrac{2x}{x^2-y^2}$.

L. C. D. $= xy(x^2-y^2)$.

$x^2y - xy^2 - 2y^2$ = first numerator,
$-2x^2 + x^2y + xy^2$ = second numerator,
$-2x^2y$ = third numerator.
$-2x^2 \quad -2y^2$ = sum of numerators.
$= -2(x+y)(x^2-xy+y^2)$.

$\therefore$ Sum of fractions $= \dfrac{-2(x+y)(x^2-xy+y^2)}{xy(x+y)(x-y)}$

$= -\dfrac{2(x^3-xy+y^2)}{xy(x-y)}$.

16. $\dfrac{a-b}{x(a+b)} - \dfrac{a-b}{y(a+b)} - \dfrac{(a-b)(x+y)}{xy(a+b)}$.

L. C. D. $= xy(a+b)$.

$ay - by$ = first numerator,
$-ax + bx$ = second numerator,
$-ay+by-ax+bx$ = third numerator.
$-2ax+2bx$ = sum of numerators.
$= 2x(b-a)$.

$\therefore$ Sum of fractions $= \dfrac{2x(b-a)}{xy(a+b)} = \dfrac{2(b-a)}{y(a+b)}$.

17. $\dfrac{3x}{(x+y)^2} - \dfrac{x+2y}{x^2-y^2} + \dfrac{3y}{(x-y)^2}$.

L. C. D. $= (x+y)^2(x-y)^2$.

$3x^3 - 6x^2y + 3xy^2$ = first numerator,
$-x^3 - 2x^2y + xy^2 + 2y^3$ = second numerator,
$+3x^2y + 6xy^2 + 3y^3$ = third numerator.
$2x^3 - 5x^2y + 10xy^2 + 5y^3$ = sum of numerators.

$\therefore$ Sum of fractions $= \dfrac{2x^3-5x^2y+10xy^2+5y^3}{(x+y)^2(x-y)^2}$.

18. $\dfrac{a-c}{(a+b)^2-c^2}-\dfrac{a-b}{(a+c)^2-b^2}$.

L. C. D. $=(a+b+c)(a+b-c)(a-b+c)$.

$a^2 \qquad -c^2$ = first numerator,

$-a^2+ac+b^2-ab$ = second numerator.

$ac+b^2-ab-c^2$ = sum of numerators.

$\therefore$ Sum of fractions $=\dfrac{ac-ab+b^2-c^2}{(a+b+c)(a+b-c)(a+c-b)}$.

19. $\dfrac{a+b}{ax+by}-\dfrac{a-b}{ax-by}+\dfrac{ab(x-y)}{a^2x^2-b^2y^2}$

L. C. D. $=(ax+by)(ax-by)$.

$a^2x+abx-aby-b^2y$ = first numerator,

$-a^2x+abx-aby+b^2y$ = second numerator,

$+abx-aby$ = third numerator.

$+3abx-3aby$ = sum of numerators;

or, $3ab(x-y)$ = sum of numerators.

$\therefore$ Sum of fractions $=\dfrac{3ab(x-y)}{a^2x^2-b^2y^2}$.

Exercise 53.

1. $\dfrac{x}{x-y}+\dfrac{x-y}{y-x}=\dfrac{x}{x-y}-\dfrac{x-y}{x-y}$.

L. C. D. $=x-y$.

x = first numerator,

$y-x$ = second numerator.

y = sum of numerators.

$\therefore$ Sum of fractions $=\dfrac{y}{x-y}$.

2. $\dfrac{3+2x}{2-x}+\dfrac{3x-2}{2+x}+\dfrac{16x-x^2}{x^2-4}$

$=\dfrac{3+2x}{2-x}+\dfrac{3x-2}{2+x}-\dfrac{16x-x^2}{4-x^2}$

L. C. D. $=4-x^2$.

$6+7x+2x^2$ = first numerator,

$-4+8x-3x^2$ = second numerator,

$-16x+x^2$ = third numerator.

$2-x$ = sum of numerators.

$\therefore$ Sum of fractions $=\dfrac{2-x}{4-x^2}=\dfrac{1}{2+x}$.

3. $\frac{x^2}{x^2-1}+\frac{x}{x+1}-\frac{x}{1-x}=\frac{x^2}{x^2-1}+\frac{x}{x+1}+\frac{x}{x-1}$

L. C. D. $= x^2-1$.

x^2 = first numerator,
x^2-x = second numerator,
x^2+x = third numerator.
$3x^2$ = sum of numerators.

$\therefore$ Sum of fractions $= \frac{3x^2}{x^2-1}$.

4. $\frac{4}{3-3y^2}+\frac{1}{2-2y}+\frac{1}{6y+6}$

$=\frac{4}{3(1+y)(1-y)}+\frac{1}{2(1-y)}+\frac{1}{6(1+y)}$

L. C. D. $= 6(1+y)(1-y)$.

8 = first numerator,
$3y+3$ = second numerator,
$-y+1$ = third numerator.
$2y+12$ = sum of numerators;
or, $2(6+y)$ = sum of numerators.

$\therefore$ Sum of fractions $= \frac{6+y}{3(1-y^2)}$.

5. $\frac{1}{(2-m)(3-m)}-\frac{2}{(m-1)(m-3)}+\frac{1}{(m-1)(m-2)}$

$=\frac{1}{(2-m)(3-m)}-\frac{2}{(1-m)(3-m)}+\frac{1}{(1-m)(2-m)}$

L. C. D. $= (1-m)(2-m)(3-m)$.

$1-m$ = first numerator,
$-4+2m$ = second numerator,
$3-m$ = third numerator.
0 = sum of numerators.

$\therefore$ Sum of fractions $= 0$.

6. $\frac{1}{(b-a)(x+a)}+\frac{1}{(a-b)(x+b)}$

$=\frac{1}{(b-a)(x+a)}-\frac{1}{(b-a)(x+b)}$.

L. C. D. $= (b-a)(x+a)(x+b)$.

$x+b$ = first numerator,
$-x-a$ = second numerator.
$b-a$ = sum of numerators.

$\therefore$ Sum of fractions $= \frac{b-a}{(b-a)(x+a)(x+b)}=\frac{1}{(x+a)(x+b)}$.

7. $\dfrac{a^2+b^2}{a^2-b^2}+\dfrac{2ab^2}{b^3-a^3}+\dfrac{2a^2b}{a^3+b^3}=\dfrac{a^2+b^2}{a^2-b^2}-\dfrac{2ab^2}{a^3-b^3}+\dfrac{2a^2b}{a^3+b^3}$.

L. C. D. $=(a^3-b^3)(a^3+b^3)$.

$a^6 \quad +2a^4b^2+2a^2b^4 \quad +b^6$ = first numerator,
$\quad -2a^4b^2 \quad -2ab^5$ = second numerator,
$+2a^5b \quad -2a^2b^4$ = third numerator.
$a^6+2a^5b \quad -2ab^5+b^6$ = sum of numerators.

$\therefore$ Sum of fractions $=\dfrac{a^6+2a^5b-2ab^5+b^6}{(a^3-b^3)(a^3+b^3)}$.

8. $\dfrac{b-a}{x-b}-\dfrac{a-2b}{b+x}-\dfrac{3x(a-b)}{b^2-x^2}=\dfrac{b-a}{x-b}-\dfrac{a-2b}{x+b}+\dfrac{3x(a-b)}{x^2-b^2}$.

L. C. D. $=x^2-b^2$.

$-ab-ax+bx+b^2$ = first numerator,
$ab-ax+2bx-2b^2$ = second numerator,
$3ax-3bx$ = third numerator.
$ax \quad -b^2$ = sum of numerators.

$\therefore$ Sum of fractions $=\dfrac{ax-b^2}{x^2-b^2}$.

9. $\dfrac{3+2x}{2-x}-\dfrac{2-3x}{2+x}+\dfrac{16x-x^2}{x^2-4}=\dfrac{3+2x}{2-x}-\dfrac{2-3x}{2+x}-\dfrac{16x-x^2}{4-x^2}$

L. C. D. $=4-x^2$.

$6+7x+2x^2$ = first numerator,
$-4+8x-3x^2$ = second numerator,
$-16x+x^2$ = third numerator.
$2 \quad -x$ = sum of numerators.

$\therefore$ Sum of fractions $=\dfrac{2-x}{4-x^2}=\dfrac{1}{2+x}$.

10. $\dfrac{3}{1-2x}-\dfrac{7}{1+2x}-\dfrac{4-20x}{4x^2-1}=\dfrac{3}{1-2x}-\dfrac{7}{1+2x}+\dfrac{4-20x}{1-4x^2}$

L. C. D. $=1-4x^2$.

$3+6x$ = first numerator,
$-7+14x$ = second numerator,
$4-20x$ = third numerator.
0 = sum of numerators.

$\therefore$ Sum of fractions $=0$.

11. $\dfrac{a+b}{(b-c)(c-a)}+\dfrac{b+c}{(b-a)(a-c)}+\dfrac{c+a}{(a-b)(b-c)}$

$=-\dfrac{a+b}{(b-c)(a-c)}-\dfrac{b+c}{(a-b)(a-c)}+\dfrac{a+c}{(a-b)(b-c)}.$

L.C.D. $=(a-b)(a-c)(b-c)$.

$-a^2+b^2$ = first numerator,

$-b^2+c^2$ = second numerator,

a^2-c^2 = third numerator.

0 = sum of numerators.

$\therefore$ Sum of fractions $=0$.

12. $\dfrac{a^2-bc}{(a-b)(a-c)}+\dfrac{b^2+ac}{(b+c)(b-a)}+\dfrac{c^2+ab}{(c-a)(c+b)}$

$=\dfrac{a^2-bc}{(a-b)(a-c)}-\dfrac{ac+b^2}{(b+c)(a-b)}-\dfrac{ab+c^2}{(a-c)(b+c)}.$

L.C.D. $=(a-b)(a-c)(b+c)$.

$a^2b-b^2c+a^2c-bc^2$ = first numerator,

$b^2c-a^2c+ac^2-ab^2$ = second numerator,

$-a^2b+bc^2-ac^2+ab^2$ = third numerator.

0 = sum of numerators.

$\therefore$ Sum of fractions $=0$.

13. $\dfrac{y+z}{(x-y)(x-z)}+\dfrac{z+x}{(y-x)(y-z)}+\dfrac{x+y}{(z-x)(z-y)}$

$=\dfrac{y+z}{(x-y)(x-z)}-\dfrac{x+z}{(x-y)(y-z)}+\dfrac{x+y}{(x-z)(y-z)}.$

L.C.D. $=(x-y)(y-z)(x-z)$.

y^2-z^2 = first numerator,

$-x^2+z^2$ = second numerator,

x^2-y^2 = third numerator.

0 = sum of numerators.

$\therefore$ Sum of fractions $=0$.

14. $\dfrac{3}{(a-b)(b-c)}-\dfrac{4}{(b-a)(c-a)}-\dfrac{6}{(a-c)(c-b)}$

$=\dfrac{3}{(a-b)(b-c)}-\dfrac{4}{(a-b)(a-c)}+\dfrac{6}{(a-c)(b-c)}.$

L.C.D. $=(a-b)(a-c)(b-c)$.

$3a-3c$ = first numerator,

$-4b+4c$ = second numerator,

$6a-6b$ = third numerator.

$9a-10b+c$ = sum of numerators.

$\therefore$ Sum of fractions $=\dfrac{9a-10b+c}{(a-b)(a-c)(b-c)}$.

15. $\dfrac{1}{x(x-y)(x-z)}+\dfrac{1}{y(y-x)(y-z)}-\dfrac{1}{xyz}$

$=\dfrac{1}{x(x-y)(x-z)}-\dfrac{1}{y(x-y)(y-z)}-\dfrac{1}{xyz}$.

L.C.D. $=xyz(x-y)(x-z)(y-z)$.

$y^2z \quad -yz^2$ = first numerator,

$-x^2z+xz^2$ = second numerator

$\underline{-x^2y+xy^2-y^2z+x^2z-xz^2+yz^2}$ = third numerator.

$-x^2y+xy^2$ = sum of numerators;

or, $-xy(x-y)$ = sum of numerators.

$\therefore$ Sum of fractions $=\dfrac{-xy(x-y)}{xyz(x-y)(x-z)(y-z)}$

$=-\dfrac{1}{z(x-z)(y-z)}$.

Exercise 54.

1. $\dfrac{a}{bx}\times\dfrac{cx}{d}$.

Cancelling common factor x,

$=\dfrac{ac}{bd}$.

2. $\dfrac{2x}{a}\times\dfrac{3ab}{c}\times\dfrac{3ac}{2b}$.

Cancelling $2abc$,

$=9ax$.

3. $\dfrac{3p}{2p-2}\div\dfrac{2p}{p-1}$.

$=\dfrac{3p}{2(p-1)}\times\dfrac{p-1}{2p}$.

Cancelling p and $p-1$,

$=\frac{3}{4}$.

4. $\dfrac{8x^4y}{15ab^3}\div\dfrac{2x^3}{3ab^2}$

$=\dfrac{8x^4y}{15ab^3}\times\dfrac{3ab^2}{2x^3}$.

Cancelling $2x^3$ and $3ab^2$,

$=\dfrac{4xy}{5b}$.

5. $\dfrac{8a^2b^3}{45x^2y}\times\dfrac{15xy^2}{24a^3b^2}$.

Cancelling 8, 15, a^2, b^2, x, and y,

$=\dfrac{by}{9ax}$.

6. $\dfrac{9x^2y^2z}{10a^2b^2c}\times-\dfrac{20a^3b^2c}{18xy^2z}$.

Cancelling $9xy^2z$, $10a^2b^2c$, and 2,

$=-ax$.

7. $\dfrac{3x^2y}{4xz^2}\times\dfrac{5y^2z}{6xy}\times-\dfrac{12x^2}{2xy^2}$.

Cancelling 2, 6, x^2, y^2, and z,

$=-\dfrac{15x}{4z}$.

8. $\dfrac{9m^2n^2}{8p^3q^3}\times\dfrac{5p^2q}{2xy}\times\dfrac{24x^2y^2}{90mn}$.

Cancelling 9, 5, 8, mn, p^2q, and xy,

$=\dfrac{3mnxy}{4pq^2}$.

9. $\frac{25k^2m^2}{14n^2q^2} \times \frac{70n^3q}{75p^2m} \times \frac{3pm}{4k^2n}$

Cancelling $25k^2m$, $14n^2q$, and $3p$,

$= \frac{5km^2}{4pq}$.

10. $\frac{a-b}{a^2+ab} \times \frac{a^2-b^2}{a^2-ab}$

$= \frac{a-b}{a(a+b)} \times \frac{(a+b)(a-b)}{a(a-b)}$.

Cancelling $a-b$ and $a+b$,

$= \frac{a-b}{a^2}$.

11. $\frac{a^2+b^2}{a^2-b^2} + \frac{a-b}{a+b}$

$= \frac{a^2+b^2}{(a-b)(a+b)} \times \frac{a+b}{a-b}$.

Cancelling $a+b$,

$= \frac{a^2+b^2}{(a-b)^2}$.

12. $\frac{x^2+x-2}{x^2-7x} \times \frac{x^2-13x+42}{x^2+2x}$

$= \frac{(x+2)(x-1)}{x(x-7)} \times \frac{(x-6)(x-7)}{x(x+2)}$.

Cancelling $x-7$ and $x+2$

$= \frac{(x-1)(x-6)}{x^2}$.

13. $\frac{x^2-11x+30}{x^2-6x+9} \times \frac{x^2-3x}{x^2-5x}$

$= \frac{(x-5)(x-6)}{(x-3)(x-3)} \times \frac{x(x-3)}{x(x-5)}$

$= \frac{x-6}{x-3}$.

14. $\frac{a^3-x^3}{a^3+x^3} \times \frac{(a+x)^2}{(a-x)^2}$

$= \frac{(a-x)(a^2+ax+x^2)}{(a+x)(a^2-ax+x^2)} \times \frac{(a+x)^2}{(a-x)^2}$

$= \frac{(a+x)(a^2+ax+x^2)}{(a-x)(a^2-ax+x^2)}$.

15. $\frac{2a(x^2-y^2)^2}{cx} \times \frac{x^3}{(x-y)(x+y)^2}$

$= \frac{2a(x+y)^2(x-y)^2}{cx} \times \frac{x^3}{(x-y)(x+y)^2}$

$= \frac{2ax^2(x-y)}{c}$.

16. $\dfrac{a^2+2ab}{a^2+4b^2} \times \dfrac{ab-2b^2}{a^2-4b^2}$

$= \dfrac{a(a+2b)}{a^2+4b^2} \times \dfrac{b(a-2b)}{(a-2b)(a+2b)}$

$= \dfrac{ab}{a^2+4b^2}.$

17. $\dfrac{x^2-4}{x^2+5x} \times \dfrac{x^2-25}{x^2+2x}$

$= \dfrac{(x+2)(x-2)}{x(x+5)} \times \dfrac{(x+5)(x-5)}{x(x+2)}$

$= \dfrac{(x-2)(x-5)}{x^2}.$

18. $\dfrac{x^2+xy}{x-y} \times \dfrac{(x-y)^2}{x^4-y^4}$

$= \dfrac{x(x+y)}{x-y} \times \dfrac{(x-y)(x-y)}{(x^2+y^2)(x+y)(x-y)}$

$= \dfrac{x}{x^2+y^2}.$

19. $\dfrac{m^2-n^2}{c^3+d^3} \div \dfrac{n-m}{c+d}$

$= \dfrac{(m+n)(m-n)}{(c+d)(c^2-cd+d^2)} \times -\dfrac{c+d}{m-n}$

$= -\dfrac{m+n}{c^2-cd+d^2}.$

20. $\dfrac{a^2-4a+3}{a^2-5a+4} \times \dfrac{a^2-9a+20}{a^2-10a+21} \times \dfrac{a^2-7a}{a^2-5a}$

$= \dfrac{(a-3)(a-1)}{(a-4)(a-1)} \times \dfrac{(a-5)(a-4)}{(a-7)(a-3)} \times \dfrac{a(a-7)}{a(a-5)}$

$= 1.$

21. $\dfrac{b^2-7b+6}{b^2+3b-4} \times \dfrac{b^2+10b+24}{b^2-14b+48} \div \dfrac{b^2+6b}{b^2-8b^2}$

$= \dfrac{(b-6)(b-1)}{(b+4)(b-1)} \times \dfrac{(b+6)(b+4)}{(b-8)(b-6)} \times \dfrac{b^2(b-8)}{b(b+6)}$

$= b.$

22. $\dfrac{x^2-y^2}{x^2-3xy+2y^2} \times \dfrac{xy-2y^2}{x^2+xy} \times \dfrac{x^2-xy}{(x-y)^2}$

$= \dfrac{(x+y)(x-y)}{(x-2y)(x-y)} \times \dfrac{y(x-2y)}{x(x+y)} \times \dfrac{x(x-y)}{(x-y)(x-y)}$

$= \dfrac{y}{x-y}.$

23. $\dfrac{a^3-3a^2b+3ab^2-b^3}{a^2-b^2}+\dfrac{2ab-2b^2}{3}\times\dfrac{a^2+ab}{a-b}$

$=\dfrac{a^3-3a^2b+3ab^2-b^3}{a^2-b^2}\times\dfrac{3}{2ab-2b^2}\times\dfrac{a^2+ab}{a-b}$

$=\dfrac{(a-b)(a-b)(a-b)}{(a+b)(a-b)}\times\dfrac{3}{2b(a-b)}\times\dfrac{a(a+b)}{a-b}$

$=\dfrac{3a}{2b}.$

24. $\dfrac{(a+b)^2-c^2}{a^2-(b-c)^2}+\dfrac{c^2-(a+b)^2}{c^2-(a-b)^2}$

$=\dfrac{(a+b+c)(a+b-c)(c-a+b)(c+a-b)}{(a-b+c)(a+b-c)(c-a-b)(c+a+b)}$

$=\dfrac{c-a+b}{c-a-b}.$

25. $\dfrac{(x-a)^2-b^2}{(x-b)^2-a^2}\times\dfrac{x^2-(b-a)^2}{x^2-(a-b)^2}$

$=\dfrac{(x-a+b)(x-a-b)(x+b-a)(x-b+a)}{(x-b+a)(x-b-a)(x+a-b)(x-a+b)}$

$=\dfrac{x-a+b}{x+a-b}.$

26. $\dfrac{(a+b)^2-(c+d)^2}{(a+c)^2-(b+d)^2}\div\dfrac{(a-c)^2-(d-b)^2}{(a-b)^2-(d-c)^2}$

$=\dfrac{(a+b+c+d)(a+b-c-d)(a-b+d-c)(a-b-d+c)}{(a+c+b+d)(a+c-b-d)(a-c+d-b)(a-c-d+b)}$

$=1.$

27. $\dfrac{x^2-2xy+y^2-z^2}{x^2+2xy+y^2-z^2}\times\dfrac{x+y-z}{x-y+z}$

$=\dfrac{(x-y)^2-z^2}{(x+y)^2-z^2}\times\dfrac{x+y-z}{x-y+z}$

$=\dfrac{(x-y+z)(x-y-z)(x+y-z)}{(x+y+z)(x+y-z)(x-y+z)}$

$=\dfrac{x-y-z}{x+y+z}.$

Exercise 55.

1. $\dfrac{\frac{3x}{2}+\frac{x-1}{3}}{\frac{13}{6}(x+1)-\frac{x}{3}-2\frac{1}{2}}$.

Multiply both terms by 6,

$$=\frac{9x+2x-2}{13x+13-2x-15}$$

$$=\frac{11x-2}{11x-2}=1.$$

2. $\dfrac{x-1+\frac{6}{x-6}}{x-2+\frac{3}{x-6}}$.

Multiply both terms by $x-6$,

$$=\frac{x^2-7x+12}{x^2-8x+15}$$

$$=\frac{(x-4)(x-3)}{(x-5)(x-3)}$$

$$=\frac{x-4}{x-5}.$$

3. $\dfrac{3}{x+1}-\dfrac{2x-1}{x^2+\frac{x}{2}-\frac{1}{2}}$.

Multiply both terms of second fraction by 2,

$$=\frac{3}{x+1}-\frac{4x-2}{2x^2+x-1}$$

$$=\frac{3}{x+1}-\frac{2(2x-1)}{(2x-1)(x+1)}$$

$$=\frac{3}{x+1}-\frac{2}{x+1}=\frac{1}{x+1}.$$

4. $\dfrac{x-a}{x-\frac{(x-b)(x-c)}{x+a}}$

$$=\frac{x-a}{\frac{x^2+ax-x^2+bx+cx-bc}{x+a}}$$

$$=\frac{(x-a)(x+a)}{ax+bx+cx-bc}$$

5. $\dfrac{\left(\frac{a}{x}-\frac{x}{a}\right)\left(\frac{a}{x}+\frac{x}{a}\right)}{1-\frac{x-a}{x+a}}$

$$=\frac{\left(\frac{a^2-x^2}{ax}\right)\left(\frac{a^2+x^2}{ax}\right)}{\frac{2a}{a+x}}$$

$$=\frac{(a^2-x^2)(a^2+x^2)(a+x)}{2a^3x^2}.$$

6. $\dfrac{\frac{1}{x-y}-\frac{x}{x^2-y^2}}{\frac{x}{xy+y^2}-\frac{y}{x^2+xy}}$

$$=\frac{\frac{x+y-x}{x^2-y^2}}{\frac{x^2-y^2}{xy(x+y)}}$$

$$=\frac{y}{x^2-y^2}\times\frac{xy(x+y)}{x^2-y^2}$$

$$=\frac{xy^2}{(x+y)(x-y)^2}.$$

7. $$\frac{\frac{x+1}{x-1}+\frac{x-1}{x+1}}{\frac{x+1}{x-1}-\frac{x-1}{x+1}}$$

$$=\frac{\frac{(x+1)^2}{x^2-1}+\frac{(x-1)^2}{x^2-1}}{\frac{(x+1)^2}{x^2-1}-\frac{(x-1)^2}{x^2-1}}$$

$$=\frac{(x^2+2x+1)+(x^2-2x+1)}{(x^2+2x+1)-(x^2-2x+1)}$$

$$=\frac{2x^2+2}{4x}=\frac{x^2+1}{2x}.$$

8. $$1-\frac{1}{1+\frac{1}{x}}$$

$$=1-\frac{x}{x+1}$$

$$=\frac{x+1-x}{x+1}$$

$$=\frac{1}{x+1}.$$

9. $$1+\frac{x}{1+x+\frac{2x^2}{1-x}}$$

$$=1+\frac{x(1-x)}{(1+x)(1-x)+2x^2}$$

$$=1+\frac{x(1-x)}{1+x^2}$$

$$=\frac{1+x^2+x-x^2}{1+x^2}$$

$$=\frac{1+x}{1+x^2}.$$

10. $$\frac{1}{1-\frac{1}{1+\frac{1}{x}}}$$

$$=\frac{1}{1-\frac{x}{x+1}}$$

$$=\frac{x+1}{x+1-x}$$

$$=\frac{x+1}{1}$$

$$=x+1$$

11. $$\frac{1}{1+\frac{x}{1+x+\frac{2x^2}{1-x}}}$$

$$=\frac{1}{1+\frac{x}{\frac{1+x^2}{1-x}}}$$

$$=\frac{1}{1+\frac{x-x^2}{1+x^2}}$$

$$=\frac{1+x^2}{1+x}.$$

12. $$\frac{\left(\frac{a}{x}+\frac{x}{a}-2\right)\left(\frac{a}{x}+\frac{x}{a}+2\right)}{\left(\frac{a}{x}-\frac{x}{a}\right)^2}$$

$$=\frac{\left(\frac{a^2-2ax+x^2}{ax}\right)\left(\frac{a^2+2ax+x^2}{ax}\right)}{\left(\frac{a^2-x^2}{ax}\right)\left(\frac{a^2-x^2}{ax}\right)}$$

$$=\frac{(a-x)(a-x)(a+x)(a+x)}{(a+x)(a-x)(a+x)(a-x)}$$

$$=1.$$

13. $$\frac{\frac{x^2+y^2}{x^2-y^2}+\frac{2x}{x+y}\left\{\frac{xy-x^2}{(x-y)^2}+\frac{x+y}{x-y}\right\}}{x-y}$$

$$=\frac{\frac{x^2+y^2}{x^2-y^2}+\frac{2x}{x+y}\left\{-\frac{x}{x-y}+\frac{x+y}{x-y}\right\}}{x-y}$$

$$=\frac{\frac{x^2+y^2}{x^2-y^2}+\frac{2x}{x+y}\left\{\frac{y}{x-y}\right\}}{x-y}$$

$$=\frac{\frac{x^2+y^2}{x^2-y^2}+\frac{2xy}{x^2-y^2}}{x-y}$$

$$=\frac{\frac{x^2+2xy+y^2}{x^2-y^2}}{x-y}$$

$$=\frac{(x+y)(x+y)}{(x-y)(x+y)}\times\frac{1}{x-y}=\frac{x+y}{x^2-2xy+y^2}.$$

14. $$\frac{\frac{(x^2-y^2)(2x^2-2xy)}{4(x-y)^2}}{\frac{xy}{x+y}}$$

$$=\frac{(x+y)(x-y)2x(x-y)(x+y)}{4(x-y)(x-y)xy}$$

$$=\frac{(x+y)^2}{2y}$$

15. $$\frac{\frac{ab}{x^2+(a+b)x+ab}-\frac{ac}{x^2+(a+c)x+ac}}{\frac{b-c}{x^2+(b+c)x+bc}}$$

$$=\frac{\frac{(abx+abc)-(acx+abc)}{(x+a)(x+b)(x+c)}}{\frac{(b-c)}{(x+b)(x+c)}}$$

$$=\frac{ax(b-c)(x+b)(x+c)}{(x+a)(x+b)(x+c)(b-c)}=\frac{ax}{x+a}.$$

16. $\dfrac{x}{1+\frac{1}{x}}+1-\dfrac{1}{x+1}$

$=\dfrac{x^2}{x+1}+1-\dfrac{1}{x+1}$

$=\dfrac{x^2+x}{x+1}$

$=x.$

17. $\dfrac{\frac{a+b}{b}+\frac{b}{a+b}}{\frac{1}{a}+\frac{1}{b}}$

$=\dfrac{\frac{(a+b)^2+b^2}{b(a+b)}}{\frac{a+b}{ab}}$

$=\dfrac{(a+b)^2+b^2}{b(a+b)}\times\dfrac{ab}{a+b}$

$=\dfrac{\{(a+b)^2+b^2\}a}{(a+b)^2}$

$=\dfrac{(a^2+2ab+2b^2)a}{(a+b)^2}.$

18. $\dfrac{2m-3+\frac{1}{m}}{\frac{2m-1}{m}}$

$=\dfrac{\frac{2m^2-3m+1}{m}}{\frac{2m-1}{m}}$

$=\dfrac{(2m-1)(m-1)}{2m-1}$

$=m-1.$

19. $\dfrac{\frac{1}{ab}+\frac{1}{ac}+\frac{1}{bc}}{\frac{a^2-(b+c)^2}{ab}}$

Multiply the terms of the numerator by abc, and factor the denominator,

$=\dfrac{\frac{c+b+a}{abc}}{\frac{(a+b+c)(a-b-c)}{ab}}$

$=\dfrac{c+b+a}{abc}\times\dfrac{ab}{(a+b+c)(a-b-c)}$

$=\dfrac{1}{c(a-b-c)}.$

20. $\dfrac{3}{1+\frac{3}{1+\frac{3}{1-x}}}$

$=\dfrac{3}{1+\frac{3(1-x)}{1-x+3}}$

$=\dfrac{3}{\frac{7-4x}{4-x}}$

$=\dfrac{3(4-x)}{7-4x}.$

Exercise 56.

1. $\dfrac{x^4-9x^3+7x^2+9x-8}{x^4+7x^3-9x^2-7x+8}$

$=\dfrac{(x-8)(x^3-x^2-x+1)}{(x+8)(x^3-x^2-x+1)}$

$=\dfrac{x-8}{x+8}$.

2. $\dfrac{a^2+b^2-c^2+2ab}{a^2-b^2-c^2+2bc}$

$=\dfrac{16+\frac{1}{4}-1+4}{16-\frac{1}{4}-1+1}$

$=\dfrac{19\frac{1}{4}}{15\frac{3}{4}}$.

Multiply both terms by 4,

$=\frac{77}{63}=1\frac{2}{3}$.

3. $3a^2+\dfrac{2ab^2}{c}-\dfrac{c^3}{b^2}$

$=3\times4\times4+\dfrac{2\times4\times\frac{1}{2}\times\frac{1}{2}}{1}-\dfrac{1}{\frac{1}{4}}$

$=48+2-4=46$.

4. $\dfrac{2}{(x^2-1)^2}-\dfrac{1}{2x^2-4x+2}-\dfrac{1}{1-x^2}$

$=\dfrac{2}{(x^2-1)^2}-\dfrac{1}{2(x-1)^2}+\dfrac{1}{x^2-1}$.

L.C.D. $=2(x^2-1)^2$.

4 = first numerator,

$-x^2-2x-1$ = second numerator,

$2x^2\quad\ -2$ = third numerator.

x^2-2x+1 = sum of numerators.

$\therefore$ Sum of fractions $=\dfrac{x^2-2x+1}{2(x^2-2x+1)(x+1)^2}=\dfrac{1}{2(x+1)^2}$.

5. $\left(\dfrac{x}{1+\frac{1}{x}}+1-\dfrac{1}{x+1}\right)\div\left(\dfrac{x}{1-\frac{1}{x}}-x-\dfrac{1}{x-1}\right)$

$=\left(\dfrac{x^2}{x+1}+1-\dfrac{1}{x+1}\right)\div\left(\dfrac{x^2}{x-1}-x-\dfrac{1}{x-1}\right)$

$=\left(\dfrac{x^2}{x+1}+\dfrac{x+1}{x+1}-\dfrac{1}{x+1}\right)\div\left(\dfrac{x^2}{x-1}-\dfrac{x^2-x}{x-1}-\dfrac{1}{x-1}\right)$

$=\dfrac{x(x+1)}{x+1}\times\dfrac{x-1}{x-1}$

$=x$.

6. $\left(\frac{x-a}{x-b}\right)^3-\left(\frac{x-2a+b}{x+a-2b}\right)$

$=\left(\frac{\frac{a+b}{2}-a}{\frac{a+b}{2}-b}\right)^3-\left(\frac{\frac{a+b}{2}-2a+b}{\frac{a+b}{2}+a-2b}\right)$

$=\left(\frac{a+b-2a}{a+b-2b}\right)^3-\left(\frac{a+b-4a+2b}{a+b+2a-4b}\right)$

$=\left(\frac{b-a}{a-b}\right)^3-\left(\frac{3b-3a}{3a-3b}\right)$

$=(-1)^3-(-1)=0.$

7. $\left(\frac{a+b}{2(a-b)}-\frac{a-b}{2(a+b)}+\frac{2b^2}{a^2-b^2}\right)\frac{a-b}{2b}$

L.C.D. of fractions in brackets $=2(a^2-b^2)$.

$a^2+2ab+b^2$ = first numerator,
$-a^2+2ab-b^2$ = second numerator,
$4b^2$ = third numerator.

$4ab+4b^2$ = sum of numerators;

or, $4b(a+b)$ = sum of numerators.

$\therefore$ Sum of fractions in brackets $=\frac{4b(a+b)}{2(a^2-b^2)}=\frac{2b}{a-b}$.

$\frac{2b}{a-b}\times\frac{a-b}{2b}=1.$

8. $\left(\frac{x^2+y^2}{x^2-y^2}-\frac{x^2-y^2}{x^2+y^2}\right)+\left(\frac{x+y}{x-y}-\frac{x-y}{x+y}\right)$

$=\left(\frac{x^4+2x^2y^2+y^4}{x^4-y^4}-\frac{x^4-2x^2y^2+y^4}{x^4-y^4}\right)+\left(\frac{x^2+2xy+y^2}{x^2-y^2}-\frac{x^2-2xy+y^2}{x^2-y^2}\right)$

$=\frac{4x^2y^2}{x^4-y^4}+\frac{4xy}{x^2-y^2}$

$=\frac{4x^2y^2}{x^4-y^4}\times\frac{x^2-y^2}{4xy}$

$=\frac{xy}{x^2+y^2}.$

9. $\left(\frac{x^2}{y^2}-1\right)\left(\frac{x}{x-y}-1\right)+\left(\frac{x^3}{y^3}-1\right)\left(\frac{x^2+xy}{x^2+xy+y^2}-1\right)$

$=\left(\frac{x^2-y^2}{y^2}\right)\left(\frac{y}{x-y}\right)+\left(\frac{x^3-y^3}{y^3}\right)\left(\frac{-y^2}{x^2+xy+y^2}\right)$

$=\frac{x^2-y^2}{y^2}\times\frac{y}{x-y}+\frac{x^3-y^3}{y^3}\times\frac{-y^2}{x^2+xy+y^2}$

$=\frac{x+y}{y}-\frac{x-y}{y}$

$=2.$

10. $\left(\frac{a^2-ab}{a^3-b^3}\right)\left(\frac{a^2+ab+b^2}{a+b}\right)+\left(\frac{2a^3}{a^3+b^3}-1\right)\left(1-\frac{2ab}{a^2+ab+b^2}\right)$

$=\left(\frac{a(a-b)}{a^3-b^3}\right)\left(\frac{a^2+ab+b^2}{a+b}\right)+\left(\frac{a^3-b^3}{a^3+b^3}\right)\left(\frac{a^2-ab+b^2}{a^2+ab+b^2}\right)$

$=\frac{a}{a+b}+\frac{a-b}{a+b}$

$=\frac{2a-b}{a+b}.$

11. $\dfrac{1+\frac{a-x}{a+x}}{1-\frac{a-x}{a+x}}+\dfrac{1+\frac{a^2-x^2}{a^2+x^2}}{1-\frac{a^2-x^2}{a^2+x^2}}$

Multiply both terms of first fraction by $a+x$, and both terms of the second by a^2+x^2,

$=\frac{a+x+a-x}{a+x-a+x}+\frac{a^2+x^2+a^2-x^2}{a^2+x^2-a^2+x^2}$

$=\frac{2a}{2x}\times\frac{2x^2}{2a^2}=\frac{x}{a}.$

12. $x^3+\frac{1}{x^3}-3\left(\frac{1}{x^2}-x^2\right)+4\left(x+\frac{1}{x}\right)\div\left(x+\frac{1}{x}\right)$

$=\left(x^3+\frac{1}{x^3}\right)+3\left(x^2-\frac{1}{x^2}\right)+4\left(x+\frac{1}{x}\right)\div\left(x+\frac{1}{x}\right)$

$=\left(x^2-1+\frac{1}{x^2}\right)+3\left(x-\frac{1}{x}\right)+4$

$=x^2+3x+3-\frac{3}{x}+\frac{1}{x^2}.$

13. $$\frac{1-\dfrac{2xy}{(x+y)^2}}{1+\dfrac{2xy}{(x-y)^2}}+\left\{\frac{1-\dfrac{y}{x}}{1+\dfrac{y}{x}}\right\}^2$$

$$=\frac{\dfrac{x^2+y^2}{(x+y)^2}}{\dfrac{x^2+y^2}{(x-y)^2}}+\frac{\left(\dfrac{x-y}{x}\right)^2}{\left(\dfrac{x+y}{x}\right)^2}$$

$$=\frac{(x^2+y^2)(x-y)^2}{(x^2+y^2)(x+y)^2}\times\frac{(x+y)^2}{(x-y)^2}$$

$$=1.$$

14. $$\frac{x+2a}{2b-x}+\frac{x-2a}{2b+x}-\frac{4ab}{4b^2-x^2}$$

$$=\frac{\dfrac{ab}{a+b}+2a}{2b-\dfrac{ab}{a+b}}+\frac{\dfrac{ab}{a+b}-2a}{2b+\dfrac{ab}{a+b}}-\frac{4ab}{4b^2-\left(\dfrac{ab}{a+b}\right)^2}$$

$$=\frac{3ab+2a^2}{ab+2b^2}-\frac{2a^2+ab}{3ab+2b^2}-\frac{4ab(a+b)^2}{b^2(3a^2+8ab+4b^2)}$$

$$=\frac{a(3b+2a)}{b(a+2b)}-\frac{a(2a+b)}{b(3a+2b)}-\frac{4ab(a+b)^2}{b^2(3a+2b)(a+2b)}.$$

L.C.D. $=b^2(3a+2b)(a+2b)$.

$6a^3b+13a^2b^2+6ab^3$ = first numerator,
$-2a^3b-5a^2b^2-2ab^3$ = second numerator,
$-4a^3b-8a^2b^2-4ab^3$ = third numerator.

0 = sum of numerators.

$\therefore$ Sum of fractions $=0$.

15. $$\frac{x+y-1}{x-y+1}$$

$$=\frac{\dfrac{a+1}{ab+1}+\dfrac{ab+a}{ab+1}-1}{\dfrac{a+1}{ab+1}-\dfrac{ab+a}{ab+1}+1}$$

$$=\frac{\dfrac{2a}{ab+1}}{\dfrac{2}{ab+1}}$$

$$=a.$$

16. $\dfrac{1}{a(a-b)(a-c)}+\dfrac{1}{b(b-c)(b-a)}+\dfrac{1}{c(c-a)(c-b)}$

$=\dfrac{1}{a(a-b)(a-c)}-\dfrac{1}{b(b-c)(a-b)}+\dfrac{1}{c(a-c)(b-c)}$.

L. C. D. $=abc(a-b)(a-c)(b-c)$.

b^2c-bc^2 = first numerator,
$-a^2c+ac^2$ = second numerator,
$+a^2b-ab^2$ = third numerator.
$b^2c-bc^2-a^2c+ac^2+a^2b-ab^2$ = sum of numerators.

$\therefore$ Sum of fractions $=\dfrac{b^2c-bc^2-a^2c+ac^2+a^2b-ab^2}{abc(b^2c-bc^2-a^2c+ac^2+a^2b-ab^2)}$

$=\dfrac{1}{abc}$.

17. $\dfrac{3abc}{bc+ca-ab}-\dfrac{\dfrac{a-1}{a}+\dfrac{b-1}{b}+\dfrac{c-1}{c}}{\dfrac{1}{a}+\dfrac{1}{b}-\dfrac{1}{c}}$.

Multiply both terms of the second fraction by abc,

$=\dfrac{3abc}{bc+ca-ab}-\dfrac{abc-bc+abc-ac+abc-ab}{bc+ca-ab}$

$=\dfrac{3abc}{bc+ca-ab}-\dfrac{3abc-bc-ac-ab}{bc+ca-ab}$

$=\dfrac{bc+ac+ab}{bc+ac-ab}$.

18. $\dfrac{\dfrac{m^2+n^2}{n}-m}{\dfrac{1}{n}-\dfrac{1}{m}}\times\dfrac{m^2-n^2}{m^3+n^3}$

$=\dfrac{m^2-mn+n^2}{n}\times\dfrac{mn}{m-n}\times\dfrac{(m+n)(m-n)}{(m+n)(m^2-mn+n^2)}$

$=m$.

19. $$\frac{\frac{1}{a}+\frac{1}{b+c}}{\frac{1}{a}-\frac{1}{b+c}}\left(1+\frac{b^2+c^2-a^2}{2bc}\right)$$

$$=\frac{(b+c+a)(2bc+b^2+c^2-a^2)}{(b+c-a)2bc}$$

$$=\frac{(b+c+a)\{(b+c)^2-a^2\}}{(b+c-a)2bc}\cdot$$

$$=\frac{(b+c+a)(b+c+a)(b+c-a)}{(b+c-a)2bc}$$

$$=\frac{(b+c+a)^2}{2bc}.$$

20. $$3a-[b+\{2a-(b-c)\}]+\tfrac{1}{2}+\frac{2c^2-\frac{1}{2}}{2c+1}$$

$$=3a-[b+2a-b+c]+\tfrac{1}{2}+\frac{2c^2-\frac{1}{2}}{2c+1}$$

$$=3a-b-2a+b-c+\tfrac{1}{2}+\frac{2c^2-\frac{1}{2}}{2c+1}$$

$$=a-c+\tfrac{1}{2}+\frac{2c^2-\frac{1}{2}}{2c+1}$$

$$=a-c+\tfrac{1}{2}+\frac{4c^2-1}{2(2c+1)}$$

$$=a-c+\tfrac{1}{2}+\frac{2c-1}{2}$$

$$=a-c+\tfrac{1}{2}+c-\tfrac{1}{2}$$

$$=a.$$

21. $$\frac{\frac{1}{a-x}-\frac{1}{a-y}+\frac{x}{(a-x)^2}-\frac{y}{(a-y)^2}}{\frac{1}{(a-y)(a-x)^2}-\frac{1}{(a-x)(a-y)^2}}$$

$$=\frac{\frac{(a-x)(a-y)^2-(a-y)(a-x)^2+x(a-y)^2-y(a-x)^2}{(a-x)^2(a-y)^2}}{\frac{x-y}{(a-x)^2(a-y)^2}}$$

$$=\frac{a(2a-x-y)(x-y)}{(a-x)^2(a-y)^2}\times\frac{(a-x)^2(a-y)^2}{x-y}$$

$$=a(2a-x-y).$$

22. $$\frac{1}{x+\dfrac{1}{1+\dfrac{x+1}{3-x}}}$$
$$=\frac{1}{x+\dfrac{3-x}{3+1}}$$
$$=\frac{4}{4x+3-x}$$
$$=\frac{4}{3(x+1)}.$$

23. $$\frac{(x^2-y^2)(2x^2-2xy)}{4(x-y)^2+\dfrac{xy}{x+y}}$$
$$=\frac{(x+y)(x-y)(x-y)2x}{\dfrac{4(x-y)(x-y)(x+y)}{xy}}$$
$$=\frac{x^2y}{2}.$$

24. $$\left(\frac{c-b}{c+b}-\frac{c^3-b^3}{c^3+b^3}\right)+\left(\frac{c+b}{c-b}+\frac{c^2+b^2}{c^2-b^2}\right).$$

L. C. D. 1st expression $= c^3+b^3$. L. C. D. 2d expression $= c^2-b^2$.

$c^3-2c^2b+2cb^2-b^3$ = 1st num. $c^2+2cb+b^2$ = 1st num.
$-c^3+b^3$ = 2d num. c^2+b^2 = 2d num.
$-2c^2b+2cb^2$ = sum of nums. $2c^2+2cb+2b^2$ = sum of nums.
or, $-2cb(c-b)$ = sum of nums. or, $2(c^2+cb+b^2)$ = sum of nums.

$$=\frac{-2cb(c-b)}{(c+b)(c^2-cb+b^2)}\times\frac{(c+b)(c-b)}{2(c^2+cb+b^2)}$$
$$=\frac{-cb(c-b)^2}{c^4+c^2b^2+b^4}$$
$$=\frac{-bc(b-c)^2}{b^4+b^2c^2+c^4}.$$

25. $$\frac{y}{(x-y)(x-z)}+\frac{x}{(y-x)(y-z)}+\frac{x+y}{(z-x)(z-y)}$$
$$=\frac{y}{(x-y)(x-z)}-\frac{x}{(x-y)(y-z)}+\frac{x+y}{(x-z)(y-z)}.$$

L. C. D. $= (x-y)(x-z)(y-z)$.

y^2-yz = first numerator,
$-x^2+xz$ = second numerator,
x^2-y^2 = third numerator.
$xz-yz$ = sum of numerators;
or, $z(x-y)$ = sum of numerators.

$\therefore$ Sum of fractions $= \dfrac{z(x-y)}{(x-y)(y-z)(x-z)} = \dfrac{z}{(x-z)(y-z)}.$

26. $\dfrac{1}{a(a-b)(a-c)} + \dfrac{1}{b(b-a)(b-c)} - \dfrac{1}{abc}$

$= \dfrac{1}{a(a-b)(a-c)} - \dfrac{1}{b(a-b)(b-c)} - \dfrac{1}{abc}$

L.C.D. $= abc(a-b)(b-c)(a-c)$.

$-bc^2 \quad + b^2c \quad = $ first numerator,

$-a^2c + ac^2 = $ second numerator,

$-bc^2 - a^2b + ab^2 - b^2c + a^2c - ac^2 = $ third numerator.

$-a^2b + ab^2 = $ sum of numerators.

$\therefore$ Sum of fractions $= -\dfrac{ab(a-b)}{abc(a-b)(b-c)(a-c)}$

$= -\dfrac{1}{c(b-c)(a-c)}$.

27. $\dfrac{x-4+\dfrac{6}{x+1}}{x-\dfrac{6}{x-1}} \times \dfrac{1-\dfrac{x+5}{x^2-1}}{(x-1)(x-2)}$

$= \dfrac{\dfrac{x^2-3x+2}{x+1}}{\dfrac{x^2-x-6}{x-1}} \times \dfrac{\dfrac{x^2-x-6}{x^2-1}}{(x-1)(x-2)}$

$= \dfrac{(x-1)(x-2)(x-1)}{(x+1)(x-3)(x+2)} \times \dfrac{(x-3)(x+2)}{(x+1)(x-1)(x-1)(x-2)}$

$= \dfrac{1}{(x+1)^2}$.

Exercise 57.

1. $5x - \dfrac{x+2}{2} = 71$.

Multiply by 2; then

$10x - x - 2 = 142$,

$9x = 144$,

$x = 16$.

2. $x - \dfrac{3-x}{3} = \dfrac{17}{3}$.

Multiply by 3; then

$3x - 3 + x = 17$,

$4x = 20$,

$x = 5$.

3. $\frac{5-2x}{4}+2=x-\frac{6x-8}{2}$.

Multiply by 4; then

$5-2x+8=4x-12x+16$,

$6x=3$,

$x=\frac{1}{2}$.

4. $\frac{5x}{2}-\frac{5x}{4}=\frac{9}{4}-\frac{3-x}{2}$.

Multiply by 4; then

$10x-5x=9-6+2x$,

$3x=3$,

$x=1$.

5. $2x-\frac{5x-4}{6}=7-\frac{1-2x}{5}$.

Multiply by 30; then

$60x-25x+20=210-6+12x$,

$23x=184$,

$x=8$.

6. $\frac{x+2}{2}=\frac{14}{9}-\frac{3+5x}{4}$.

Multiply by 36; then

$18x+36=56-27-45x$,

$63x=-7$,

$x=-\frac{1}{9}$.

7. $\frac{5x+3}{8}-\frac{3-4x}{3}+\frac{x}{2}=\frac{31}{2}-\frac{9-5x}{6}$.

Multiply by 24; then

$15x+9-24+32x+12x=372-36+20x$,

$39x=351$,

$x=9$.

8. $\frac{10x+3}{3}-\frac{6x-7}{2}=10(x-1)$.

Multiply by 6; then

$20x+6-18x+21=60x-60$,

$58x=87$,

$x=1\frac{1}{2}$.

9. $\frac{5x-7}{2}-\frac{2x+7}{3}=3x-14$.

Multiply by 6; then

$15x-21-4x-14=18x-84$,

$7x=49$,

$x=7$.

10. $\frac{7x+5}{6}-\frac{5x-6}{4}=\frac{8-5x}{12}$.

Multiply by 12; then

$14x+10-15x+18=8-5x$,

$4x=-20$,

$x=-5$.

11. $\frac{x+4}{3}-\frac{x-4}{5}=2+\frac{3x-1}{15}$.

Multiply by 15; then

$5x+20-3x+12=30+3x-1$,

$-x=-3$,

$x=3$.

12. $\frac{3x+5}{7}-\frac{2x+7}{3}+10-\frac{3x}{5}=0$.

Multiply by 105; then

$45x+75-70x-245+1050-63x=0$,

$-88x=-880$,

$x=10$.

13. $\frac{1}{7}(3x-4)+\frac{1}{3}(5x+3)=43-5x$.

Multiply by 21; then

$$9x-12+35x+21=903-105x,$$
$$149x=894,$$
$$x=6.$$

14. $\frac{1}{2}(27-2x)=\frac{8}{5}-\frac{1}{10}(7x-54)$.

Multiply by 10; then

$$135-10x=45-7x+54,$$
$$-3x=-36,$$
$$x=12.$$

15. $5x-\{8x-3[16-6x-(4-5x)]\}=6,$

$$5x-\{8x-3[16-6x-4+5x]\}=6,$$
$$5x-\{8x-48+18x+12-15x\}=6,$$
$$5x-8x+48-18x-12+15x=6,$$
$$-6x=-30,$$
$$x=5.$$

16. $\frac{5x-3}{7}-\frac{9-x}{3}=\frac{5x}{2}+\frac{19}{6}(x-4)$.

Multiply by 42; then

$$30x-18-126+14x=105x+133x-532,$$
$$-194x=-388,$$
$$x=2.$$

17. $\frac{2x+7}{7}-\frac{9x-8}{11}=\frac{x-11}{2}$.

Multiply by 154; then

$$44x+154-126x+112=77x-847,$$
$$-159x=-1113,$$
$$x=7.$$

18. $\frac{8x-15}{3}-\frac{11x-1}{7}=\frac{7x+2}{13}$.

Multiply by 273; then

$$728x-1365-429x+39=147x+42,$$
$$152x=1368,$$
$$x=9.$$

19. $\frac{7x+9}{8}-\frac{3x+1}{7}=\frac{9x-13}{4}-\frac{249-9x}{14}$.

Multiply by 56; then

$$49x+63-24x-8=126x-182-996+36x,$$
$$-137x=-1233,$$
$$x=9.$$

Exercise 58.

1. $\frac{9x+20}{36} = \frac{4(x-3)}{5x-4} + \frac{x}{4}$.

Multiply by 36; then

$9x + 20 = \frac{144(x-3)}{5x-4} + 9x,$

$\frac{144(x-3)}{5x-4} = 20,$

$144x - 432 = 100x - 80,$

$44x = 352,$

$x = 8.$

2. $\frac{9(2x-3)}{14} + \frac{11x-1}{3x+1} = \frac{9x+11}{7}$.

Multiply by 14; then

$18x - 27 + \frac{154x-14}{3x+1}$

$= 18x + 22,$

$\frac{154x-14}{3x+1} = 49.$

Divide by 7,

$\frac{22x-2}{3x+1} = 7,$

$22x - 2 = 21x + 7,$

$x = 9.$

3. $\frac{10x+17}{18} - \frac{12x+2}{13x-16} = \frac{5x-4}{9}$.

Multiply by 18; then

$10x + 17 - \frac{216x+36}{13x-16}$

$= 10x - 8,$

$\frac{216x+36}{13x-16} = 25,$

$325x - 400 = 216x + 36,$

$109x = 436,$

$x = 4.$

4. $\frac{6x+13}{15} - \frac{3x+5}{5x-25} = \frac{2x}{5}$

Multiply by 15; then

$6x + 13 - \frac{45x+75}{5x-25} = 6x,$

$\frac{45x+75}{5x-25} = 13,$

$45x + 75 = 65x - 325,$

$-20x = -400,$

$x = 20.$

5. $\frac{18x-22}{39-6x} + 2x + \frac{1+16x}{24} = 4\frac{5}{12} - \frac{101-64x}{24}$.

Reduce the mixed number to an improper fraction,

$\frac{18x-22}{3(13-2x)} + 2x + \frac{1+16x}{24} = \frac{53}{12} - \frac{101-64x}{24}$

Multiply by 24; then

$\frac{8(18x-22)}{13-2x} + 48x + 1 + 16x = 106 - 101 + 64x,$

$\frac{144x-176}{13-2x} = 4,$

$144x - 176 = 52 - 8x,$

$152x = 228,$

$x = 1\frac{1}{2}.$

6. $\frac{6-5x}{15}-\frac{7-2x^2}{14(x-1)}=\frac{1+3x}{21}-\frac{10x-11}{30}+\frac{1}{105}$.

Multiply by 210; then

$84-70x-\frac{105-30x^2}{x-1}=10+30x-70x+77+2,$

$-\frac{105-30x^2}{x-1}=30x+5,$

$-105+30x^2=30x^2-25x-5,$

$25x=100,$

$x=4.$

7. $\frac{9x+5}{14}+\frac{8x-7}{6x+2}=\frac{36x+15}{56}+\frac{41}{56}$.

Multiply by 56; then

$36x+20+\frac{224x-196}{3x+1}$

$=36x+15+41,$

$\frac{224x-196}{3x+1}=36,$

$224x-196=108x+36,$

$116x=232,$

$x=2.$

8. $\frac{6x+7}{15}-\frac{2x-2}{7x-6}=\frac{2x+1}{5}$.

Multiply by 15; then

$6x+7-\frac{30x-30}{7x-6}=6x+3,$

$-\frac{30x-30}{7x-6}=-4,$

$-30x+30=-28x+24,$

$-2x=-6,$

$x=3.$

9. $\frac{6x+1}{15}-\frac{2x-4}{7x-16}=\frac{2x-1}{5}$.

Multiply by 15; then

$6x+1-\frac{30x-60}{7x-16}=6x-3,$

$-\frac{30x-60}{7x-16}=-4,$

$-30x+60=-28x+64,$

$-2x=4,$

$x=-2.$

10. $\frac{7x-6}{35}-\frac{x-5}{6x-101}=\frac{x}{5}$.

Multiply by 35; then

$7x-6-\frac{35x-175}{6x-101}=7x.$

Transpose, and clear of fractions,

$-35x+175=36x-606,$

$-71x=-781,$

$x=11.$

EXERCISE 59.

1. $ax+bc=bx+ac,$

$ax-bx=ac-bc,$

$x(a-b)=c(a-b),$

$x=c.$

2. $2a-cx=3c-5bx,$

$5bx-cx=3c-2a,$

$x(5b-c)=3c-2a,$

$x=\frac{3c-2a}{5b-c}.$

3. $a^2x + bx - c = b^2x + cx - d,$
$a^2x - b^2x + bx - cx = c - d,$
$x(a^2 - b^2 + b - c) = c - d,$
$x = \dfrac{c-d}{a^2 - b^2 + b - c}.$

4. $-ac^2 + b^2c + abcx = abc + cmx - ac^2x + b^2c - mc,$
$abcx - cmx + ac^2x = abc + b^2c - mc + ac^2 - b^2c,$
$x(abc - cm + ac^2) = abc - mc + ac^2,$
$x = 1.$

5. $(a + x + b)(a + b - x) = (a + x)(b - x) - ab,$
$-x^2 + a^2 + 2ab + b^2 = ab + bx - ax - x^2 - ab,$
$ax - bx = -a^2 - 2ab - b^2,$
$ax - bx = -(a^2 + 2ab + b^2),$
$x = -\dfrac{(a+b)^2}{a-b}.$

6. $(a^2 + x)^2 = x^2 + 4a^2 + a^4,$
$a^4 + 2a^2x + x^2 = x^2 + 4a^2 + a^4,$
$2a^2x = 4a^2,$
$x = 2.$

7. $(a^2 - x)(a^2 + x) = (a^4 + 2ax - x^2),$
$a^4 - x^2 = a^4 + 2ax - x^2,$
$-2ax = 0,$
$x = 0.$

8. $\dfrac{ax - b}{c} + a = \dfrac{x + ac}{c}.$

Multiply by c; then

$ax - b + ac = x + ac.$

$ax - x = b,$
$x(a-1) = b,$
$x = \dfrac{b}{a-1}.$

9. $\dfrac{a(b^2x + x^3)}{bx} = acx + \dfrac{ax^2}{b}.$

Divide by a; then

$\dfrac{b^2x + x^3}{bx} = cx + \dfrac{x^2}{b}.$

Multiply by bx,

$b^2x + x^3 = bcx^2 + x^3,$
$b^2x = bcx^2,$
$x = \dfrac{b}{c}.$

10. $ax - \dfrac{3a - bx}{2} = \dfrac{1}{2}.$

Multiply by 2,

$2ax - 3a + bx = 1,$
$2ax + bx = 3a + 1,$
$x(2a + b) = 3a + 1,$
$x = \dfrac{3a+1}{2a+b}.$

11. $6a - \frac{4ax - 2b}{3} = x.$

$18a - 4ax + 2b = 3x,$
$-3x - 4ax = -18a - 2b,$
$x(3 + 4a) = 2(9a + b),$
$x = \frac{2(9a + b)}{3 + 4a}.$

12. $\frac{x^2 - a}{bx} - \frac{a - x}{b} = \frac{2x}{b} - \frac{a}{x}.$

$x^2 - a - ax + x^2 = 2x^2 - ab,$
$-ax = -ab + a,$
$x = b - 1.$

13. $\frac{3}{c} - \frac{ab - x^2}{bx} = \frac{4x - ac}{cx}.$

$3bx - abc + cx^2 = 4bx - abc,$
$cx^2 = bx,$
$x = \frac{b}{c}.$

14. $am - b - \frac{ax}{b} + \frac{x}{m} = 0.$

$abm^2 - b^2m - amx + bx = 0,$
$bx - amx = b^2m - abm^2,$
$x = \frac{b^2m - abm^2}{b - am}$
$= bm.$

15. $\frac{3ax - 2b}{3b} - \frac{ax - a}{2b} = \frac{ax}{b} - \frac{2}{3}.$

$6ax - 4b - 3ax + 3a = 6ax - 4b,$
$-3ax = -3a,$
$x = 1.$

16. $\frac{ab + x}{b^2} - \frac{b^2 - x}{a^2b} = \frac{x - b}{a^2} - \frac{ab - x}{b^2}.$

$a^3b + a^2x - b^3 + bx$
$= b^2x - b^3 - a^3b + a^2x,$
$-b^2x + bx = -a^3b - a^3b,$
$bx(b - 1) = 2a^3b,$
$x = \frac{2a^3}{b - 1}.$

17. $ax - \frac{bx + 1}{x} = \frac{a(x^2 - 1)}{x}.$

$ax^2 - bx - 1 = ax^2 - a,$
$-bx = -a + 1,$
$x = \frac{a - 1}{b}.$

18. $\frac{ax^2}{b - cx} + a + \frac{ax}{c} = 0.$

$acx^2 + abc - ac^2x + abx - acx^2 = 0.$

Divide by a,

$cx^2 + bc - c^2x + bx - cx^2 = 0,$
$bx - c^2x = -bc,$
$x = \frac{bc}{c^2 - b}.$

19. $\frac{ab}{x} - bc + d + \frac{1}{x}.$

$ab = bcx + dx + 1,$
$-bcx - dx = -ab + 1,$
$x = \frac{ab - 1}{bc + d}.$

20. $\frac{a(d^2 + x^2)}{dx} = ac + \frac{ax}{d}.$

$ad^2 + ax^2 = acdx + ax^2,$
$acdx = ad^2,$
$x = \frac{d}{c}.$

Exercise 60.

1. $\frac{x-3}{4(x-1)} = \frac{x-5}{6(x-1)} + \frac{1}{9}$.

Clear of fractions,

$9x - 27 = 6x - 30 + 4x - 4,$

$-x = -7,$

$x = 7.$

2. $x + \frac{x}{x-1} = \frac{(x-2)(x+4)}{x+1}$.

Clear of fractions,

$x^3 - x + x^2 + x = x^3 + x^2 - 10x + 8,$

$10x = 8,$

$x = \frac{4}{5}.$

3. $\frac{7}{x-1} = \frac{6x+1}{x+1} - \frac{3(1+2x^2)}{x^2-1}$.

Clear of fractions,

$7x + 7 = 6x^2 + x - 6x - 1 - 3 - 6x^2,$

$12x = -11,$

$x = -1\frac{11}{12}.$

4. $\frac{1}{2(x-3)} - \frac{1}{3(x-2)} = \frac{x-1}{(x-2)(x-3)}$

Clear of fractions,

$3x - 6 - 2x + 6 = 6x - 6,$

$-5x = -6,$

$x = 1\frac{1}{5}.$

5. $1 - \frac{2(2x+3)}{9(7-x)} = \frac{6}{7-x} - \frac{5x+1}{4(7-x)}$.

Clear of fractions,

$252 - 36x - 16x - 24 = 216 - 45x - 9,$

$-7x = -21,$

$x = 3.$

6. $\frac{17}{x+3} - 4 = \frac{5(21+2x)}{3x+9} - 10.$

Clear of fractions,

$51 - 12x - 36 = 105 + 10x - 30x - 90,$

$8x = 0,$

$x = 0.$

7. $\frac{x-7}{x+7} = \frac{2x-15}{2x-6} - \frac{1}{2(x+7)}$

Clear of fractions,

$2x^2 - 20x + 42 = 2x^2 - x - 105 - x + 3,$

$-18x = -144,$

$x = 8.$

8. $\frac{x+4}{3x+5} + 1\frac{1}{6} = \frac{3x+8}{2x+3}$

Clear of fractions,

$12x^2 + 66x + 72 + 36x^2 + 114x + 90 + 6x^2 + 19x + 15 = 54x^2 + 134x + 240,$

$-35x = 63,$

$x = -1\frac{4}{5}.$

9. $\frac{132x+1}{3x+1}+\frac{8x+5}{x-1}=52.$

Clear of fractions,

$132x^2-131x-1+24x^2+23x+5 = 156x^2-104x-52,$

$-4x=-56,$

$x=14.$

10. $\frac{2}{2x-3}+\frac{1}{x-2}=\frac{6}{3x+2}.$

Clear of fractions,

$6x^2-8x-8+6x^2-5x-6 = 12x^2-42x+36,$

$29x=50,$

$x=1\frac{21}{29}.$

11. $\frac{3x-1}{2x-1}-\frac{4x-2}{3x-2}=\frac{1}{6}.$

Clear of fractions,

$54x^2-54x+12-48x^2+48x-12 = 6x^2-7x+2,$

$x=2.$

12. $\frac{3}{x-1}-\frac{x+1}{x-1}=\frac{x^2}{1-x^2};$

or, $\frac{3}{x-1}-\frac{x+1}{x-1}=-\frac{x^2}{x^2-1}.$

Clear of fractions,

$3x+3-x^2-2x-1=-x^2,$

$x=-2.$

13. $\frac{x-4}{x-5}-\frac{x-5}{x-6}=\frac{x-7}{x-8}-\frac{x-8}{x-9}.$

Then

$$\frac{(x-4)(x-6)}{(x-5)(x-6)}-\frac{(x-5)(x-5)}{(x-5)(x-6)}=\frac{(x-7)(x-9)}{(x-8)(x-9)}-\frac{(x-8)(x-8)}{(x-8)(x-9)}.$$

$$\frac{-1}{(x-5)(x-6)}=\frac{-1}{(x-8)(x-9)}.$$

Clear of fractions,

$$-x^2+17x-72=-x^2+11x-30,$$

$$6x=42,$$

$$x=7.$$

14. $(x-a)(x-b)=(x-a-b)^2,$

$x^2-ax-bx+ab=x^2-2ax-2bx+a^2+2ab+b^2,$

$ax+bx=a^2+ab+b^2,$

$$x=\frac{a^2+ab+b^2}{a+b}.$$

15. $(a-b)(x-c)-(b-c)(x-a)-(c-a)(x-b)=0,$

$ax-bx-ac+bc-bx+cx+ab-ac-cx+ax+bc-ab=0,$

$ax-bx-bx+cx-cx+ax=ac-bc-ab+ac-bc+ab,$

$2ax-2bx=2ac-2bc,$

$2x(a-b)=2c(a-b),$

$x=c.$

16. $\frac{x^2-x+1}{x-1}+\frac{x^2+x+1}{x+1}=2x.$

Clear of fractions,

$x^3+1+x^3-1=2x^3-2x,$

$2x=0,$

$x=0.$

17. $\frac{4}{x+2}+\frac{7}{x+3}=\frac{37}{x^2+5x+6}.$

Clear of fractions,

$4x+12+7x+14=37,$

$11x=11,$

$x=1.$

18. $(x+1)^2=x[6-(1-x)]-2,$

$(x+1)^2=x(6-1+x)-2,$

$x^2+2x+1=6x-x+x^2-2,$

$-3x=-3,$

$x=1.$

19. $\frac{25-\frac{1}{3}x}{x+1}+\frac{16x+4\frac{1}{3}}{3x+2}=\frac{23}{x+1}+5.$

Reduce the complex to simple fractions,

$\frac{75-x}{3(x+1)}+\frac{80x+21}{5(3x+2)}=\frac{23}{x+1}+5.$

Clear of fractions,

$1115x-15x^2+750+240x^2+303x+63$

$=1035x+690+225x^2+375x+150,$

$8x=27,$

$x=3\frac{3}{8}.$

20. $\frac{3abc}{a+b}+\frac{a^2b^2}{(a+b)^3}+\frac{(2a+b)b^2x}{a(a+b)^2}=3cx+\frac{bx}{a}.$

Clear of fractions,

$3a^4bc+6a^3b^3c+3a^2b^3c+a^3b^2+2a^2b^2x+3ab^3x+b^4x$

$=3a^4cx+9a^3bcx+9a^2b^2cx+3ab^3cx+a^3bx+3a^2b^2x+3ab^3x+b^4x,$

$3a^4cx+9a^3bcx+9a^2b^2cx+3ab^3cx+a^3bx+a^2b^2x$

$=3a^4bc+6a^3b^2c+3a^2b^3c+a^3b^2,$

$ax(3a^3c+9a^2bc+9ab^2c+3b^3c+a^2b+ab^2)$

$=a^2b(3a^2c+6abc+3b^2c+ab),$

$x\{3c(a+b)^3+ab(a+b)\}=ab\{3c(a+b)^2+ab\}.$

$x=\frac{ab}{a+b}.$

21. $\frac{4}{x-8}+\frac{3}{2x-16}-\frac{29}{24}=\frac{2}{3x-24}.$

Clear of fractions,

$96+36-29x+232=16,$

$-29x=-348,$

$x=12.$

22. $5-x\left(\frac{7}{2}-\frac{2}{x}\right)=\frac{x}{2}-\frac{3x-(4-5x)}{4}$

$5-\frac{7x}{2}+2=\frac{x}{2}-\frac{3x-4+5x}{4}.$

Clear of fractions,

$20-14x+8=2x-3x+4-5x,$

$-8x=-24,$

$x=3.$

23. $\frac{1}{5}-\frac{3}{x-1}=\frac{2+\frac{x+4}{1-x}}{3}$.

Multiply both terms of right member by $1-x$; then

$$\frac{1}{5}-\frac{3}{x-1}=\frac{6-x}{3(1-x)},$$

$$\frac{1}{5}-\frac{3}{x-1}=\frac{x-6}{3(x-1)}.$$

Clear of fractions,

$$3x-3-45=5x-30,$$
$$-2x=18,$$
$$x=-9.$$

24. $\frac{x-\frac{3}{4}}{\frac{1}{2}(x-1)}+\frac{x-\frac{3}{4}}{\frac{1}{2}(x+1)}=1+\frac{1}{15\left(1-\frac{1}{x^2}\right)}$

Reduce the complex to simple fractions,

$$\frac{2x-3}{3x-3}+\frac{2x-5}{5x+5}=1+\frac{x^2}{15x^2-15}.$$

Clear of fractions,

$$10x^2-5x-15+6x^2-21x+15=15x^2-15+x^2,$$
$$-26x=-15,$$
$$x=1\tfrac{5}{13}.$$

Exercise 61.

1. Find the number whose third and fourth parts added together make 14.

Let x = the number.

Then $\frac{x}{3}$ = one-third of the number,

and $\frac{x}{4}$ = one-fourth of the number,

and $\frac{x}{3}+\frac{x}{4}$ = sum of the two parts.

But 14 = sum of the two parts.

$\therefore \frac{x}{3}+\frac{x}{4}=14$. Whence, $x=24$.

2. Find the number whose third part exceeds its fourth part by 14.

Let x = the number.

Then $\frac{x}{3}$ = one-third of the number,

and $\frac{x}{4}$ = one-fourth of the number,

and $\frac{x}{3} - \frac{x}{4}$ = the excess.

But 14 = the excess.

$\therefore \frac{x}{3} - \frac{x}{4} = 14$. Whence, $x = 168$.

3. The half, fourth, and fifth of a certain number are together equal to 76; find the number.

Let x = the number.

Then $\frac{x}{2}$ = one-half of the number,

and $\frac{x}{4}$ = one-fourth of the number,

$\frac{x}{5}$ = one-fifth of the number,

$\frac{x}{2} + \frac{x}{4} + \frac{x}{5}$ = sum of the parts.

But 76 = sum of the parts.

$\therefore \frac{x}{2} + \frac{x}{4} + \frac{x}{5} = 76$. Whence, $x = 80$.

4. Find the number whose double exceeds its half by 12.

Let x = the number.

Then $\frac{x}{2}$ = one-half the number,

and $2x$ = double the number,

$2x - \frac{x}{2}$ = the excess.

But 12 = the excess.

$\therefore 2x - \frac{x}{2} = 12$. Whence, $x = 8$.

5. Divide 60 into two such parts that a seventh of one part may be equal to an eighth of the other.

Let x = one part,
and $60 - x$ = the other part.

Then $\frac{x}{7}$ = one-seventh of one part,

and $\frac{60-x}{8}$ = one-eighth of the other part.

$\therefore \frac{60-x}{8} = \frac{x}{7}$.

Whence, $x = 28$,
and $60 - x = 32$.

6. Divide 50 into two such parts that a fourth of one part increased by five-sixths of the other part may be equal to 40.

Let x = the smaller part.
Then $50 - x$ = the larger part,

$\frac{x}{4} + \frac{5}{6}(50-x) = \frac{1}{4}$ of one part increased by $\frac{5}{6}$ of the other.

But $40 = \frac{1}{4}$ of one part increased by $\frac{5}{6}$ of the other.

$\therefore \frac{x}{4} + \frac{5}{6}(50-x) = 40$.

Whence, $x = 28\frac{4}{7}$,
and $50 - x = 47\frac{1}{7}$.

7. Divide 100 into two such parts that a fourth of one part diminished by a third of the other part may be equal to 11.

Let x = one part.
Then $100 - x$ = the other.

$\frac{x}{4} - \frac{100-x}{3} = \frac{1}{4}$ of one part diminished by $\frac{1}{3}$ of the other.

But $11 = \frac{1}{4}$ of one part diminished by $\frac{1}{3}$ of the other.

$\therefore \frac{x}{4} - \frac{100-x}{3} = 11$.

Whence, $x = 76$,
and $100 - x = 24$.

8. The sum of the fourth, fifth, and sixth parts of a certain number exceeds the half of the number by 112. What is the number?

Let x = the number.

Then $\frac{x}{2}$ = one-half of the number,

$\frac{x}{4}$ = one-fourth of the number,

$\frac{x}{5}$ = one-fifth of the number,

$\frac{x}{6}$ = one-sixth of the number.

$$\therefore \frac{x}{4}+\frac{x}{5}+\frac{x}{6}=112+\frac{x}{2}.$$

Whence, $x = 960$.

9. The sum of two numbers is 5760, and their difference is equal to one-third of the greater. What are the numbers?

Let x = the greater number.

Then $5760 - x$ = the smaller number.

$$x-(5760-x)=\frac{x}{3}.$$

$$\therefore 3x - 17{,}280 + 3x = x.$$

Whence, $x = 3456$,

and $5760 - x = 2304$.

10. Divide 45 into two such parts that the first part divided by 2 shall be equal to the second part multiplied by 2.

Let x = first number.

Then $45 - x$ = second number,

$\frac{x}{2}$ = first divided by 2,

$90 - 2x$ = second multiplied by 2.

Then $\frac{x}{2} = 90 - 2x$.

$$\therefore x = 180 - 4x.$$

Whence, $x = 36$,

and $45 - x = 9$.

11. Find a number such that the sum of its fifth and its seventh parts shall exceed the difference of its fourth and its seventh parts by 99.

Let x = the number.

Then $\frac{x}{5}$ = one-fifth of the number,

$\frac{x}{4}$ = one-fourth of the number,

$\frac{x}{7}$ = one-seventh of the number,

$\frac{x}{5}+\frac{x}{7}$ = sum of $\frac{1}{5}$ and $\frac{1}{7}$ of the number,

$\frac{x}{4}-\frac{x}{7}$ = difference between $\frac{1}{4}$ and $\frac{1}{7}$ of the number.

$\left(\frac{x}{5}+\frac{x}{7}\right)-\left(\frac{x}{4}-\frac{x}{7}\right)$ = the excess of the sum of its fourth and seventh parts over the difference of its fourth and seventh parts.

But 99 = this excess.

$\therefore \left(\frac{x}{5}+\frac{x}{7}\right)-\left(\frac{x}{4}-\frac{x}{7}\right)=99.$

Whence, $x=420.$

12. In a mixture of wine and water, the wine was 25 gallons more than half of the mixture, and the water 5 gallons less than one-third of the mixture. How many gallons were there of each?

Let x = number of gallons in mixture.

Then $\frac{x}{2}+25$ = number of gallons of wine,

$\frac{x}{3}-5$ = number of gallons of water,

$\frac{x}{2}+25+\frac{x}{3}-5$ = number of gallons in mixture.

$\therefore \frac{x}{2}+25+\frac{x}{3}-5=x.$

Whence, $x=120,$

and $\frac{x}{2}+25=85,\ \frac{x}{3}-5=35.$

13. In a certain weight of gunpowder the saltpetre was 6 pounds more than half of the weight, the sulphur 5 pounds less than the third, and the charcoal 3 pounds less than the fourth of the weight. How many pounds were there of each?

Let x = number of pounds in mixture.

Then $\frac{x}{2}+6$ = number of pounds of saltpetre,

$\frac{x}{3}-5$ = number of pounds of sulphur,

and $\frac{x}{4}-3$ = number of pounds of charcoal.

$\therefore \frac{x}{2}+6+\frac{x}{3}-5+\frac{x}{4}-3=x.$

Whence, $x=24$, $\frac{x}{2}+6=18$, $\frac{x}{3}-5=3$, $\frac{x}{4}-3=3$.

14. Divide 46 into two parts such that if one part be divided by 7, and the other by 3, the sum of the quotients shall be 10.

Let x = first part.

Then $46-x$ = second part,

and $\frac{x}{3}+\frac{46-x}{7}=10.$

Whence, $x=18$, and $46-x=28$.

15. A house and garden cost $850, and five times the price of the house is equal to twelve times the price of the garden. What is the price of each?

Let x = number of dollars the house cost,

and $850-x$ = number of dollars the garden cost.

Then $5x$ = five times cost of house,

$10{,}200-12x$ = twelve times cost of garden.

$\therefore 5x=10{,}200-12x.$

Whence, $x=600$, and $850-x=250$.

16. A man leaves the half of his property to his wife, a sixth to each of his two children, a twelfth to his brother, and the remainder, amounting to $600, to his sister. What was the amount of his property?

Let x = number of dollars the property amounted to.

Then $\frac{x}{2}$ = number of dollars left to wife,

$\frac{x}{6}$ = number of dollars left to each child,

$\frac{x}{12}$ = number of dollars left to brother.

$\frac{x}{2}+\frac{x}{6}+\frac{x}{6}+\frac{x}{12}+600$ = number of dollars in all.

But x = number of dollars in all.

$\therefore \frac{x}{2}+\frac{x}{6}+\frac{x}{6}+\frac{x}{12}+600=x.$

Whence, $x=7200.$

17. The sum of two numbers is a and their difference is b; find the numbers.

Let x = the smaller number.

Then $x+b$ = the larger number,

$2x+b$ = the sum of the numbers.

But a = the sum of the numbers.

$\therefore 2x+b=a.$

Whence, $x=\frac{a-b}{2}$, and $x+b=\frac{a+b}{2}$.

18. Find two numbers of which the sum is 70, such that the first divided by the second gives 2 as a quotient and 1 as a remainder.

Let x = first number,

and $70-x$ = second number.

Then $\frac{x-1}{70-x}=2.$

Whence, $x=47$, and $70-x=23.$

19. Find two numbers of which the difference is 25, such that the second divided by the first gives 4 as a quotient and 4 as a remainder.

Let x = smaller number.

Then $x+25$ = larger number,

$\frac{x+25}{x}=4+\frac{4}{x}.$

Whence, $x=7$, and $x+25=32.$

20. Divide the number 208 into two parts such that the sum of the fourth of the greater and the third of the smaller is less by 4 than four times the difference of the two parts.

Let x = the greater part.
Then $208 - x$ = the smaller part,
$\frac{x}{4} + \frac{208-x}{3}$ = sum of $\frac{1}{4}$ the greater and $\frac{1}{3}$ the smaller,
$x - (208 - x)$ = difference of the parts.

$\therefore \frac{x}{4} + \frac{208-x}{3} + 4 = 4(x - 208 + x)$.

Whence, $x = 112$, and $208 - x = 96$.

21. Find four consecutive numbers whose sum is 82.

Let x = first number.
Then $x + 1$ = second number,
$x + 2$ = third number,
$x + 3$ = fourth number.
Then $x + x + 1 + x + 2 + x + 3$ = sum of the numbers.
But 82 = sum of the numbers.
$\therefore x + x + 1 + x + 2 + x + 3 = 82$.
Whence, $x = 19$, $x + 1 = 20$, $x + 2 = 21$, $x + 3 = 22$.

22. A is 72 years old, and B's age is two-thirds of A's. How long is it since A was five times as old as B?

Let x = number of years since A's age was five times that of B.
$\frac{2}{3}$ of $72 = 48$ = B's age at present,
$72 - x$ = A's age x years since,
$48 - x$ = B's age x years since.
Then $72 - x = 5(48 - x)$.
Whence, $x = 42$.

23. A mother is 70 years old, her daughter is half that age. How long is it since the mother was three and one-third times as old as the daughter?

Let x = number of years since.
Then $70 - x$ = mother's age x years since,
$35 - x$ = daughter's age x years since.
$\therefore 70 - x = 3\frac{1}{3}(35 - x)$.
Whence, $x = 20$.

24. A father is three times as old as the son; four years ago the father was four times as old as the son then was. What is the age of each?

Let x = number of years in son's age.
Then $3x$ = number of years in father's age,
$x - 4$ = number of years in son's age 4 years since,
$3x - 4$ = number of years in father's age 4 years since.
$\therefore 3x - 4 = 4x - 16$. Whence, $x = 12$, and $3x = 36$.

25. A is twice as old as B, and seven years ago their united ages amounted to as many years as now represent the age of A. Find the ages of A and B.

Let x = number of years in B's age.
Then $2x$ = number of years in A's age,
$x - 7$ = number of years in B's age 7 years since,
$2x - 7$ = number of years in A's age 7 years since.
$\therefore x - 7 + 2x - 7 = 2x$. Whence, $x = 14$, and $2x = 28$.

26. The sum of the ages of a father and son is half what it will be in 25 years; the difference is one-third what the sum will be in 20 years. What is the age of each?

Let x = number of years in father's age.
Then $50 - x$ = number of years in son's age,
$x - (50 - x)$ = difference of their ages.

But $\frac{(x + 20) + (50 - x) + 20}{3}$ = difference of their ages.

$$\therefore x - 50 + x = \frac{x + 20 + 50 - x + 20}{3}.$$

Whence, $x = 40$, and $50 - x = 10$.

27. A can do a piece of work in 5 days, B in 6 days, and C in $7\frac{1}{2}$ days; in what time will they do it, all working together?

Let x = number of days required for A, B, and C, together.

Then $\frac{1}{x}$ = part all can do in one day.

But $\frac{1}{5}$ = part A can do in one day,

$\frac{1}{6}$ = part B can do in one day,

$\frac{2}{15}$ = part C can do in one day.

Then $\frac{1}{5} + \frac{1}{6} + \frac{2}{15}$ = what all can do in one day.

But $\frac{1}{x}$ = what all can do in one day.

$$\therefore \frac{1}{5} + \frac{1}{6} + \frac{2}{15} = \frac{1}{x}.$$ Whence, $x = 2$.

28. A can do a piece of work in $2\frac{1}{2}$ days, B in $3\frac{1}{3}$ days, and C in $3\frac{3}{4}$ days; in what time will they do it, all working together?

Let x = number of days required for A, B, and C, together.

Then $\frac{1}{x}$ = part they can do in one day.

Now $\frac{1}{2\frac{1}{2}}$ = part A can do in one day,

$\frac{1}{3\frac{1}{3}}$ = part B can do in one day,

$\frac{1}{3\frac{3}{4}}$ = part C can do in one day.

Then $\frac{1}{2\frac{1}{2}} + \frac{1}{3\frac{1}{3}} + \frac{1}{3\frac{3}{4}}$ = part all can do in one day.

But $\frac{1}{x}$ = part all can do in one day.

$$\therefore \frac{1}{x} = \frac{1}{2\frac{1}{2}} + \frac{1}{3\frac{1}{3}} + \frac{1}{3\frac{3}{4}}.$$

Whence, $x = 1\frac{1}{19}$.

29. Two men who can separately do a piece of work in 15 days and 16 days, can, with the help of another, do it in 6 days. How long would it take the third man to do it alone?

Let x = number of days required for third man.

$\frac{1}{x} + \frac{1}{15} + \frac{1}{16}$ = part all can do in one day.

But $\frac{1}{6}$ = part all can do in one day.

$\therefore \frac{1}{x} + \frac{1}{15} + \frac{1}{16} = \frac{1}{6}$. Whence, $x = 26\frac{2}{3}$.

30. A can do half as much work as B, B can do half as much as C, and together they can complete a piece of work in 24 days. In what time can each alone complete the work?

Let x = number of days C works.

Then $2x$ = number of days B works,

$4x$ = number of days A works.

Then $\frac{1}{x} + \frac{1}{2x} + \frac{1}{4x}$ = part all can do in one day.

But $\frac{1}{24}$ = part all can do in one day.

$\therefore \frac{1}{x} + \frac{1}{2x} + \frac{1}{4x} = \frac{1}{24}$. Whence, $x = 42$, $2x = 84$, and $4x = 168$.

31. A does $\frac{5}{9}$ of a piece of work in 10 days, when B comes to help him, and they finish the work in 3 days more. How long would it have taken B alone to do the whole work?

Let x = number of days required for B.

Then $\frac{1}{x}$ = part B can do in one day,

$\frac{1}{18}$ = part A can do in one day,

$\frac{4}{9}$ = part left to be finished,

$\frac{1}{3}$ of $\frac{4}{9}$ or $\frac{4}{27}$ = part both can do in one day.

But $\frac{1}{18}+\frac{1}{x}$ = part both can do in one day.

$\therefore \frac{1}{18}+\frac{1}{x}=\frac{4}{27}$.

Whence, $x = 10\frac{1}{2}$.

32. A and B together can reap a field in 12 hours, A and C in 16 hours, and A by himself in 20 hours. In what time can B and C together reap it? In what time can A, B, and C together reap it?

$\frac{1}{12}$ = part A and B can do together in one hour,

and $\frac{1}{20}$ = part A can do in one hour.

$\therefore \frac{1}{12}-\frac{1}{20}$ or $\frac{1}{30}$ = part B can do in one hour,

$\frac{1}{16}$ = part A and C can do together in one hour.

$\therefore \frac{1}{16}-\frac{1}{20}$ or $\frac{1}{80}$ = part C can do in one hour.

Let $\frac{1}{x}$ = part A, B, and C can do together in one hour.

Then $\frac{1}{x}=\frac{1}{20}+\frac{1}{30}+\frac{1}{80}$.

Whence, $x = 10\frac{10}{23}$.

33. A and B together can do a piece of work in 12 days, A and C in 15 days, B and C in 20 days. In what time can they do it, all working together?

Let x = number of days required working together.

$\frac{1}{12}$ = part A and B do in one day,

$\frac{1}{15}$ = part A and C do in one day,

$\frac{1}{20}$ = part B and C do in one day.

Then $\frac{1}{12}+\frac{1}{15}+\frac{1}{20}$ = part all do in two days.

But $\frac{2}{x}$ = part all do in two days.

$$\therefore \frac{2}{x}=\frac{1}{12}+\frac{1}{15}+\frac{1}{20}.$$

Whence, $x = 10$.

34. A tank can be filled by two pipes in 24 minutes and 30 minutes respectively, and emptied by a third in 20 minutes. In what time will it be filled if all three are running together?

Let x = number of minutes required for all running together,

$\frac{1}{x}$ = part filled by all in one minute,

$\frac{1}{24}$ = part filled by first in one minute,

$\frac{1}{30}$ = part filled by second in one minute,

$\frac{1}{20}$ = part emptied by third in one minute,

$\frac{1}{24}+\frac{1}{30}-\frac{1}{20}$ = part filled by all in one minute.

But $\frac{1}{x}$ = part filled by all in one minute.

$$\therefore \frac{1}{x}=\frac{1}{24}+\frac{1}{30}-\frac{1}{20}$$

Whence, $x = 40$.

35. A tank can be filled in 15 minutes by two pipes, A and B, running together. After A has been running by itself for 5 minutes, B is also turned on, and the tank is filled in 13 minutes more. In what time may it be filled by each pipe separately?

Let x = number of minutes required for A.

Then $\frac{1}{x}$ = part filled by A in one minute,

and $\frac{18}{x}$ = part filled by A in eighteen minutes,

$\frac{1}{15} - \frac{1}{x}$ = part filled by B in one minute,

$\frac{13}{15} - \frac{13}{x}$ = part filled by B in thirteen minutes.

$\therefore \frac{18}{x} + \frac{13}{15} - \frac{13}{x} = 1.$

Whence, $x = 37\frac{1}{2}$.

36. A cistern could be filled by two pipes in 6 hours and 8 hours respectively, and could be emptied by a third in 12 hours. In what time would the cistern be filled if the pipes were all running together?

Let x = number of hours required for all running together,

$\frac{1}{x}$ = part all can fill in one hour,

$\frac{1}{6}$ = part filled by first pipe in one hour,

$\frac{1}{8}$ = part filled by second pipe in one hour,

$\frac{1}{12}$ = part emptied by third pipe in one hour.

Then $\frac{1}{6} + \frac{1}{8} - \frac{1}{12}$ = part filled by all in one hour.

But $\frac{1}{x}$ = part filled by all in one hour.

$\therefore \frac{1}{x} = \frac{1}{6} + \frac{1}{8} - \frac{1}{12}.$

Whence, $x = 4\frac{4}{5}$.

37. A tank can be filled by three pipes in 1 hour and 20 minutes, 3 hours and 20 minutes, and 5 hours, respectively. In what time will the tank be filled when all three pipes are running together?

Let x = number of minutes required for all to fill it,

$\frac{1}{80}$ = part first will fill in one minute,

$\frac{1}{200}$ = part second will fill in one minute,

$\frac{1}{300}$ = part third will fill in one minute,

$\frac{1}{x}$ = part all will fill in one minute.

$$\therefore \frac{1}{x} = \frac{1}{80} + \frac{1}{200} + \frac{1}{300}.$$

Whence, $x = 48$.

38. If three pipes can fill a cistern in a, b, and c minutes, respectively, in what time will it be filled by all three running together?

Let x = number of minutes required for all.

Then $\frac{1}{a}$ = part first fills in one minute,

$\frac{1}{b}$ = part second fills in one minute,

$\frac{1}{c}$ = part third fills in one minute,

$\frac{1}{a} + \frac{1}{b} + \frac{1}{c}$ = part all fill in one minute.

But $\frac{1}{x}$ = part all fill in one minute.

$$\therefore \frac{1}{x} = \frac{1}{a} + \frac{1}{b} + \frac{1}{c}.$$

Whence, $$x = \frac{abc}{ab + ac + bc}.$$

39. The capacity of a cistern is $755\frac{1}{4}$ gallons. The cistern has three pipes, of which the first lets in 12 gallons in $3\frac{1}{4}$ minutes, the second $15\frac{1}{3}$ gallons in $2\frac{1}{2}$ minutes, the third 17 gallons in 3 minutes. In what time will the cistern be filled by the three pipes running together?

Let x = number of minutes required for all.

Then $\frac{755\frac{1}{4}}{x}$ = number of gallons let in per minute by all,

$\frac{12}{3\frac{1}{4}}$ = number of gallons let in per minute by first,

$\frac{15\frac{1}{2}}{2\frac{1}{2}}$ = number of gallons let in per minute by second,

$\frac{17}{3}$ = number of gallons let in per minute by third,

$\frac{12}{3\frac{1}{4}} + \frac{15\frac{1}{2}}{2\frac{1}{2}} + \frac{77}{3}$ = number of gallons let in per minute by all.

But $\frac{755\frac{1}{4}}{x}$ = number of gallons let in per minute by all.

$$\therefore \frac{755\frac{1}{4}}{x} = \frac{12}{3\frac{1}{4}} + \frac{15\frac{1}{2}}{2\frac{1}{2}} + \frac{17}{3}.$$

Whence, $x = 48\frac{3}{4}$.

40. **A sets out and travels at the rate of 7 miles in 5 hours. Eight hours afterwards, B sets out from the same place, and travels in the same direction at the rate of 5 miles in 3 hours. In how many hours will B overtake A?**

Let x = number of hours A is travelling.

Then $x - 8$ = number of hours B is travelling,

$1\frac{2}{5}$ = number of miles per hour A is travelling,

$1\frac{2}{3}$ = number of miles per hour B is travelling,

$1\frac{2}{5}x$ = number of miles A travels,

$1\frac{2}{3}(x-8)$ = number of miles B travels.

$$\therefore 1\tfrac{2}{5}x = 1\tfrac{2}{3}(x-8).$$

Whence, $x = 50$, $x - 8 = 42$.

41. **A person walks to the top of a mountain at the rate of $2\frac{1}{3}$ miles an hour, and down the same way at the rate of $3\frac{1}{2}$ miles an hour, and is out 5 hours. How far is it to the top of the mountain?**

Let x = number of hours required to go up,

and $5 - x$ = number of hours required to go down.

Then $2\frac{1}{3}x$ = distance up the mountain,

and $3\frac{1}{2}(5-x)$ = distance down the mountain.

$$\therefore 2\tfrac{1}{3}x = 3\tfrac{1}{2}(5-x).$$

Whence, $x = 3$, and $2\frac{1}{3}x = 7$.

42. A person has a hours at his disposal. How far may he ride in a coach which travels b miles an hour, so as to return home in time, walking back at the rate of c miles an hour?

Let x = number of miles he may go.

Then $\frac{x}{b}$ = number of hours he is riding,

and $\frac{x}{c}$ = number of hours he is walking.

$$\therefore \frac{x}{b} + \frac{x}{c} = a.$$

Whence, $$x = \frac{abc}{b+c}$$

43. The distance between London and Edinburgh is 360 miles. One traveller starts from Edinburgh and travels at the rate of 10 miles an hour; another starts at the same time from London, and travels at the rate of 8 miles an hour. How far from London will they meet?

Let x = number of hours both travel.

Then $10x$ = number of miles first travels,

and $8x$ = number of miles second travels.

$10x + 8x$ = number of miles both travel.

$\therefore 18x = 360.$

Whence, $x = 20$, and $8x = 160$.

44. Two persons set out from the same place in opposite directions. The rate of one of them per hour is a mile less than double that of the other, and in 4 hours they are 32 miles apart. Determine their rates.

Let x = rate of second in miles.

Then $2x - 1$ = rate of first in miles,

and $3x - 1$ = number of miles apart in one hour.

$12x - 4$ = number of miles apart in four hours.

$\therefore 12x - 4 = 32.$

Whence, $x = 3$, and $2x - 1 = 5$.

45. In going a certain distance, a train travelling 35 miles an hour takes 2 hours less than one travelling 25 miles an hour. Determine the distance.

Let x = number of miles.

Then $\frac{x}{35}$ = number of hours first was travelling,

and $\frac{x}{25}$ = number of hours second was travelling.

$\therefore \frac{x}{35} + 2 = \frac{x}{25}$. Whence, $x = 175$.

46. At what time are the hands of a watch together:

I. Between 3 and 4?

II. Between 6 and 7?

III. Between 9 and 10?

I. Let CH and CM denote the positions of the hour and minute hands at 3 o'clock, and CB the position of both hands when together.

Then arc $HB = \frac{1}{12}$ of arc MHB.

Then x = number of minute-spaces in arc MB,

Then $\frac{x}{12}$ = number of minute-spaces in arc HB,

and 15 = number of minute-spaces in arc MH.

Now arc MB = arc MH + arc HB.

That is, $x = 15 + \frac{x}{12}$.

Whence, $x = 16\frac{4}{11}$.

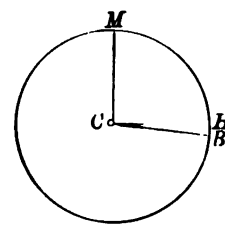

II. Let CM and CH denote the positions of hour and minute hands at 6 o'clock, CB the position of both when together.

Then arc $HB = \frac{1}{12}$ of arc MHB.

Let x = number of minute-spaces in arc MHB.

Then $\frac{x}{12}$ = number of minute-spaces in arc HB,

and 30 = number of minute-spaces in arc MH.

Now arc MHB = arc MH + arc HB.

That is, $x = 30 + \frac{x}{12}$.

Whence, $x = 32\frac{8}{11}$.

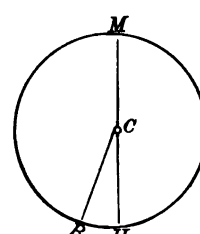

III. Let BC and BA denote the positions of the hour and minute hands at 9 o'clock, and BD the position of both hands when together.

Then $CD = \frac{1}{12}$ of arc $AECD$.

Let x = number of minute-spaces in arc $AECD$.

Then $\frac{x}{12}$ = number of minute-spaces in arc CD,

and 45 = number of minute-spaces in arc AEC.

Now arc $AECD$ = arc AEC + arc CD.

That is, $x = 45 + \frac{x}{12}$.

Whence, $x = 49\frac{1}{11}$.

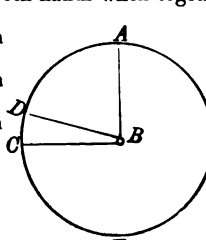

47. At what time are the hands of a watch at right angles:

I. Between 3 and 4?

II. Between 4 and 5?

III. Between 7 and 8?

I. Let CB and CD denote the positions of the hour and minute hands when at right angles.

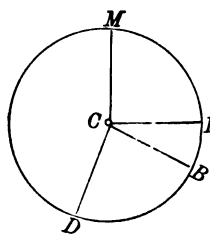

Let x = number of minute-spaces in arc $MHBD$.

Then $\frac{x}{12}$ = number of minute-spaces in arc HB,

and 15 = number of minute-spaces in arc MH,

also 15 = number of minute-spaces in arc BD.

Now arc $MHBD$ = arcs $MH+HB+BD$.

That is, $x = 15 + \frac{x}{12} + 15$.

Whence, $x = 32\frac{8}{11}$.

II. Let CE and DE denote the positions of the hour and minute hands when at right angles.

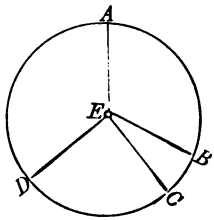

Let x = number of minute-spaces in arc $ABCD$.

Then $\frac{x}{12}$ = number of minute-spaces in arc BC,

and 20 = number of minute-spaces in arc AB,

also 15 = number of minute-spaces in arc CD.

Now arc $ABCD$ = arcs $BC+AB+CD$.

That is, $x = 20 + \frac{x}{12} + 15$.

Whence, $x = 38\frac{2}{11}$.

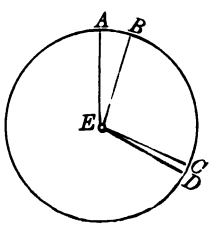

Let x = number of minute-spaces in arc AB.

Then $\frac{x}{12}$ = number of minute-spaces in arc CD,

and 20 = number of minute-spaces in arc ABC,

also 15 = number of minute-spaces in arc BCD.

Now arc AB = arcs $CD + AC - BD$.

That is, $x = \frac{x}{12} + 20 - 15$.

Whence, $x = 5\frac{5}{11}$.

III. Let BC and DC denote the positions of the hour and minute hands when at right angles.

Let x = number of minute-spaces in arc $MHBD$.

Then $\frac{x}{12}$ = number of minute-spaces in arc HB,

and 35 = number of minute-spaces in arc MAH,

also 15 = number of minute-spaces in arc BD.

Now arc $MHBD$ = arcs $MAH+HB+BD$

That is, $x = 35 + \frac{x}{12} + 15.$

Whence, $x = 54\frac{6}{11}$.

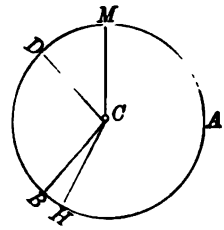

Let x = number of minute-spaces in arc MB.

Then $\frac{x}{12}$ = number of minute-spaces in arc HD,

and 35 = number of minute-spaces in arc MBH,

also 15 = number of minute-spaces in arc BHD.

Now arc MB = arcs $HBM + HD - BHD$.

That is, $x = 35 + \frac{x}{12} - 15.$

Whence, $x = 21\frac{9}{11}$.

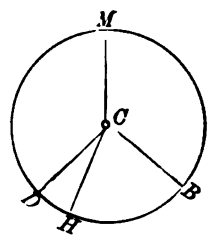

48. At what time are the hands of a watch opposite to each other:

I. Between 1 and 2?

II. Between 4 and 5?

III. Between 8 and 9?

I. Let CB and CD denote the positions of the hour and minute hands when opposite.

Let x = number of minute-spaces in arc $MHBD$.

Then $\frac{x}{12}$ = number of minute-spaces in arc HB,

and 5 = number of minute-spaces in arc MH,

also 30 = number of minute-spaces in arc BAD.

Now arc $MHBD$ = arcs $MH + HB + BAD$.

That is, $x = 5 + \frac{x}{12} + 30.$

Whence, $x = 38\frac{2}{11}$.

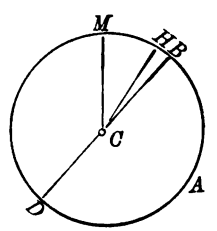

II. Let CB and CD denote the positions of the hour and minute hands when opposite.

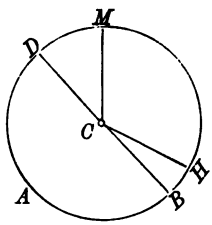

Let - x = number of minute-spaces in arc $MHBD$.

Then $\frac{x}{12}$ = number of minute-spaces in arc HB,

and 20 = number of minute spaces in arc MH,

also 30 = number of minute-spaces in arc BAD.

Now arc $MHBD$ = arcs $MH + HB + BAD$.

That is, $x = 20 + \frac{x}{12} + 30$.

Whence, $x = 54\frac{6}{11}$.

III. Let CB and CD denote the positions of the hour and minute hands when opposite.

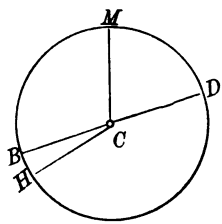

Let x = number of minute-spaces in arc MD.

Then $\frac{x}{12}$ = number of minute-spaces in arc HB,

and 40 = number of minute-spaces in arc MDH,

also 30 = number of minute-spaces in arc DHB.

Now arc MD = arcs $MDH + HB - DHB$.

That is, $x = 40 + \frac{x}{12} - 30$.

Whence, $x = 10\frac{10}{11}$.

49. It is between 2 and 3 o'clock; but a person looking at his watch, and mistaking the hour-hand for the minute-hand, fancies that the time of day is 55 minutes earlier than it really is. What is the true time?

Let CB and CD denote the positions of the hour and minute hands and CE the 1 o'clock point.

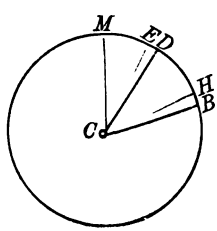

Let x = number of minute-spaces in arc MED.

Then $\frac{x}{12}$ = number of minute-spaces in arc HB,

and 10 = number of minute-spaces in arc $MEDH$,

also 5 = number of minute-spaces in arc DHB.

Now arc MED = arcs $MEDH + HB - DHB$.

That is, $x = 10 + \frac{x}{12} - 5$.

$\therefore x = 5\frac{5}{11}$.

50. A hare takes 6 leaps to a dog's 5, and 7 of the dog's leaps are equivalent to 9 of the hare's. The hare has a start of 50 of her own leaps. How many leaps will the hare take before she is caught?

Let $6x$ = number of leaps taken by the hare.
Then $5x$ = number of leaps taken by the dog.
Also let a = number of feet in one leap of the hare.
Then $\frac{9a}{7}$ = number of feet in one leap of the dog.

$$\therefore \left(\frac{9a}{7}\right)5x = (50 + 6x)a,$$

$$\frac{45ax}{7} = 50a + 6ax,$$

$$45ax = 350a + 42ax.$$

Divide by a, $3x = 350.$

Whence, $x = 116\frac{2}{3},$

$$6x = 700.$$

51. A greyhound makes 4 leaps while a hare makes 5; but 3 of the greyhound's leaps are equivalent to 4 of the hare's. The hare has a start of 60 of the greyhound's leaps. How many leaps does each take before the hare is caught?

Let $5x$ = number of leaps taken by the hare.
Then $4x$ = number of leaps taken by the greyhound.
Also let $3a$ = number of feet in one leap of the hare.
Then $4a$ = number of feet in one leap of the greyhound.
$15ax$ = number of feet passed over by hare.
$16ax$ = number of feet passed over by greyhound.
$240a$ = number of feet start the hare has.

$$\therefore 16ax = 15ax + 240a,$$

$$ax = 240a.$$

$$\therefore x = 240,$$

$$5x = 1200,$$

$$4x = 960.$$

52. A greyhound makes two leaps while a hare makes 3; but 1 leap of the greyhound is equivalent to 2 of the hare's. The hare has a start of 80 of her own leaps. How many leaps will the hare take before she is caught?

Let $2x$ = number of leaps taken by the greyhound.
Then $3x$ = number of leaps taken by the hare.
Also let a = number of feet in one leap of the hare.
Then $2a$ = number of feet in one leap of the greyhound.
That is, $2x \times 2a$ = whole distance.
But $(80 + 3x)\,a$ = whole distance.
$\therefore (80 + 3x)\,a = 4ax.$
Divide by a, $80 + 3x = 4x$. Whence, $x = 80$, and $3x = 240$.

53. A rectangle whose length is 5 feet more than its breadth would have its area increased by 22 feet if its length and breadth were each made a foot more. Find its dimensions.

Let x = number of feet in breadth.
Then $x + 5$ = number of feet in length.
$x(x + 5)$ = number of square feet in area,
$x + 1$ = number of feet in breadth + 1,
$x + 6$ = number of feet in length + 1.
$\therefore (x + 1)(x + 6) - x(x + 5) = 22.$
Whence, $x = 8$, and $x + 5 = 13$.

54. A rectangle has its length and breadth respectively 5 feet longer and 3 feet shorter than the side of the equivalent square. Find its area.

Let $x - 3$ = number of feet in breadth,
and $x + 5$ = number of feet in length.
Then $(x-3)(x+5)$ = number of feet in area.
But x^2 = number of feet in area.
$\therefore x^2 = x^2 + 2x - 15.$ Whence, $x = 7\frac{1}{2}$, and $x^2 = 56\frac{1}{4}$.

55. The length of a rectangle is an inch less than double its breadth; and when a strip 3 inches wide is cut off all round, the area is diminished by 210 inches. Find the size of the rectangle at first.

Let x = number of inches in breadth.
Then $2x - 1$ = number of inches in length,
and $6x + 12x - 6 - 36$ = number of inches in area cut off.
But 210 = number of inches in area cut off.
$\therefore 6x + 12x - 6 - 36 = 210.$ Whence, $x = 14$, and $2x - 1 = 27$.

56. The length of a floor exceeds the breadth by 4 feet; if each dimension were increased by 1 foot, the area of the room would be increased by 27 square feet. Find its dimensions.

Let x = number of feet in breadth.
Then $x+4$ = number of feet in length,
and x^2+4x = number of feet in area,
$x+1$ = number of feet in breadth + 1 foot,
$x+5$ = number of feet in length + 1 foot,
x^2+6x+5 = number of feet in area after addition.
But $x^2+4x+27$ = number of feet in area after addition.
$\therefore x^2+6x+5=x^2+4x+27$. Whence, $x=11$, and $x+4=15$.

57. A mass of tin and lead weighing 180 pounds loses 21 pounds when weighed in water; and it is known that 37 pounds of tin lose 5 pounds, and 23 pounds of lead lose 2 pounds, when weighed in water. How many pounds of tin and of lead in the mass?

Let x = number of pounds of tin.
Then $180-x$ = number of pounds of lead,
$\frac{5x}{37}$ = number of pounds x pounds of tin lose in water,
$\frac{2}{23}(180-x)$ = number of pounds $180-x$ pounds of lead lose in water.
But 21 = number of pounds tin and lead lose in water.
$\therefore \frac{5x}{37}+\frac{2}{23}(180-x)=21$.
Whence, $x=111$, and $180-x=69$.

58. If 19 pounds of gold lose 1 pound, and 10 pounds of silver lose 1 pound, when weighed in water, find the amount of each in a mass of gold and silver weighing 106 pounds in air and 99 pounds in water.

Let x = number of pounds of gold.
Then $106-x$ = number of pounds of silver,
$\frac{x}{19}$ = number of pounds the gold loses in water,
$\frac{106-x}{10}$ = number of pounds the silver loses in water,
$\frac{x}{19}+\frac{106-x}{10}$ = number of pounds both lose in water.
But 7 = number of pounds both lose in water.
$\therefore \frac{x}{19}+\frac{106-x}{10}=7$.
Whence, $x=76$, and $106-x=30$.

59. Fifteen sovereigns should weigh 77 pennyweights; but a parcel of light sovereigns, having been weighed and counted, was found to contain 9 more than was supposed from the weight; and it appeared that 21 of these coins weighed the same as 20 true sovereigns. How many were there altogether?

Let x = number in parcel,

$\frac{77}{15}$ = number pennyweights a good sovereign weighs,

$x - 9$ = number good sovereigns that weigh same as bad,

$\frac{77(x-9)}{15}$ = number pennyweights the good coins weigh,

$\frac{20}{21} \times \frac{77}{15}$ or $\frac{44}{9}$ = number pennyweights a bad coin weighs.

$\therefore \frac{44x}{9} = \frac{77(x-9)}{15}$.

Whence, $x = 189$.

60. There are two silver cups, and one cover for both. The first weighs 12 ounces, and with the cover weighs twice as much as the other without it; but the second with the cover weighs one-third more than the first without it. Find the weight of the cover.

Let x = weight of cover in ounces,

$12 + x$ = weight of first cover and cup in ounces,

$2(16 - x)$ = double the weight of the second cup in ounces.

But $12 + x$ = double the weight of the second cup in ounces.

$\therefore 12 + x = 2(16 - x)$.

Whence, $x = 6\frac{2}{3}$.

61. A man wishes to enclose a circular piece of ground with palisades, and finds that if he sets them a foot apart he will have too few by 150; but if he sets them a yard apart he will have too many by 70. What is the circuit of the piece of ground?

Let x = number of feet in circuit of field.

Then $x - 150$ = number of palisades he had.

But $\frac{x}{3} + 70$ = number of palisades he had.

$\therefore x - 150 = \frac{x}{3} + 70$.

Whence, $x = 330$.

62. A horse was sold at a loss for $200; but if it had been sold for $250, the gain would have been three-fourths of the loss when sold for $200. Find the value of the horse.

Let x = number of dollars the horse is worth.
Then $250-x$ = number of dollars made if sold for $250,
$x-200$ = number of dollars lost if sold for $200.
$\therefore 250-x=\frac{3}{4}(x-200)$.
Whence, $x=228\frac{4}{7}$.

63. A and B shoot by turns at a target. A puts 7 bullets out of 12, and B 9 out of 12, into the centre. Between them they put in 32 bullets. How many shots did each fire?

Let x = number of shots each fired,
$\frac{7x}{12}$ = number of centres made by A,
$\frac{9x}{12}$ = number of centres made by B.
But 32 = number of centres made by both.
$\therefore \frac{7x}{12}+\frac{9x}{12}=32$.
Whence, $x=24$.

64. A boy buys a number of apples at the rate of 5 for 2 pence. He sells half of them at 2 a penny and the rest at 3 a penny, and clears a penny by the transaction. How many does he buy?

Let x = number bought.
Then $\frac{2x}{5}$ = number of pence paid,
and $\frac{x}{2}\times\frac{1}{2}$ or $\frac{x}{4}$ = selling price of one-half.
But $\frac{x}{2}\times\frac{1}{3}$ or $\frac{x}{6}$ = selling price of the other half.
$\therefore \left(\frac{x}{4}+\frac{x}{6}\right)-\frac{2x}{5}=1$.
Whence, $x=60$.

65. A person bought a piece of land for $6750, of which he kept $\frac{4}{9}$ for himself. At the cost of $250 he made a road which took $\frac{1}{10}$ of the remainder, and then sold the rest at 12½ cents a square yard more than double the price it cost him, thus clearing his outlay and $500 besides. How much land did he buy, and what was the cost-price per yard?

Let x = number of yards.

Then $\frac{4x}{9}$ = number of yards kept,

$\frac{5x}{90}$ = number of yards used for road,

$\frac{x}{2}$ = number of yards sold.

$\therefore 6750 + \frac{1}{8} \times \frac{x}{2} = 7500.$

Whence, $x = 12{,}000,$

and $\$6750.00 \div x = \$0.56\frac{1}{4}.$

66. A boy who runs at the rate of 12 yards per second starts 20 yards behind another whose rate is 10½ yards per second. How soon will the first boy be 10 yards ahead of the second?

Let x = number of seconds they are running.

Then $12x$ = number of yards first boy runs,

and $\frac{21x}{2}$ = number of yards second boy runs.

$$\therefore 12x - \left(10 + \frac{21x}{2}\right) = 20,$$

$$12x - \frac{20 + 21x}{2} = 20,$$

$$24x - 20 - 21x = 40,$$

$$3x = 60,$$

$$x = 20.$$

67. A merchant adds yearly to his capital one-third of it, but takes from it, at the end of each year, $5000 for expenses. At the end of the third year, after deducting the last $5000, he has twice his original capital. How much had he at first?

Let x = number of dollars he had at first.

Then $\frac{4x}{3} - 5000$ = number of dollars he had at the end of the first year,

or $\frac{4x - 15{,}000}{3}$ = number of dollars he had at the end of the first year,

$\frac{4}{3}\left(\frac{4x - 15{,}000}{3}\right) - 5000$ = number of dollars he had at the end of the second year,

or $\frac{16x - 105{,}000}{9}$ = number of dollars he had at the end of the second year,

$\frac{4}{3}\left(\frac{16x - 105{,}000}{9}\right) - 5000$ = number of dollars he had at the end of the third year,

or $\frac{64x - 555{,}000}{27}$ = number of dollars he had at the end of the third year.

But $2x$ = number of dollars he had at the end of the third year.

$\therefore \frac{64x - 555{,}000}{27} = 2x.$

Whence, $x = 55{,}500.$

68. A shepherd lost a number of sheep equal to one-fourth of his flock and one-fourth of a sheep; then, he lost a number equal to one-third of what he had left and one-third of a sheep; finally, he lost a number equal to one-half of what now remained and one-half a sheep, after which he had but 25 sheep left. How many had he at first?

Let x = number of sheep he had at first.

Then $\frac{3x-1}{4}$ = number of sheep he had left after first loss,

$\frac{3(x+1)}{12}$ = number of sheep he lost the second time,

$\frac{x-1}{2}$ = number of sheep he had left after second loss,

$\frac{x+1}{4}$ = number of sheep he lost the third time,

$\frac{x-3}{4}$ = number of sheep he had left after third loss.

But 25 = number of sheep he had left after third loss.

$\therefore \frac{x-3}{4} = 25.$

Whence, $x = 103.$

69. A trader maintained himself for three years at an expense of $250 a year; and each year increased that part of his stock which was not so expended by one-third of it. At the end of the third year his original stock was doubled. What was his original stock?

Let x = number of dollars in stock at first.

Then $\frac{4}{3}(x-250)$

or $\frac{4x-1000}{3}$ = number of dollars in stock at the end of first year,

$\frac{4}{3}\left(\frac{4x-1000}{3}-250\right)$

or $\frac{16x-7000}{9}$ = number of dollars in stock at the end of second year,

$\frac{4}{3}\left(\frac{16x-7000}{9}-250\right)$ = number of dollars in stock at the end of third year.

But $2x$ = number of dollars in stock at the end of third year.

$\therefore \frac{4}{3}\left(\frac{16x-7000}{9}-250\right)=2x.$

Whence, $x=3700.$

70. A cask contains 12 gallons of wine and 18 gallons of water; another cask contains 9 gallons of wine and 3 gallons of water. How many gallons must be drawn from each cask to produce a mixture containing 7 gallons of wine and 7 gallons of water?

Let x = number of gallons drawn from 1st cask,

$14-x$ = number of gallons drawn from 2d cask,

$\frac{2}{5}$ = proportion of wine to water in 1st cask,

$\frac{3}{4}$ = proportion of wine to water in 2d cask.

$\therefore \frac{2x}{5}+\frac{3}{4}(14-x)=7.$

Whence, $x=10,$

and $14-x=4.$

71. The members of a club subscribe each as many dollars as there are members. If there had been 12 more members, the subscription from each would have been $10 less, to amount to the same sum. How many members were there?

Let x = number of members of the club.
Then x = number of dollars each subscribed,
$x + 12$ = number of members + 12,
and $x - 10$ = number of dollars each would have subscribed in second case.
But x^2 = number of dollars all subscribed.
$\therefore (x + 12)(x - 10) = x^2$.
Whence, $x = 60$.

72. A number of troops being formed into a solid square, it was found there were 60 men over; but when formed in a column with 5 men more in front than before and three men less in depth, there was lacking one man to complete it. Find the number of troops.

Let x = number of men on one side.
Then $x^2 + 60$ = number of men in the square,
$x + 5$ = number of men on a side + 5,
$x - 3$ = number of men on a side − 3,
and $(x + 5)(x - 3) - 1$ = number of men in the square.
$\therefore (x + 5)(x - 3) - 1 = x^2 + 60$.
Whence, $x = 38$,
and $x^2 + 60 = 1504$.

73. An officer can form the men of his regiment into a hollow square 12 deep. The number of men in the regiment is 1296. Find the number of men in the front of the hollow square.

Let x = number of men in front.
Then $12x$ = number of men in twelve lines,
and $24x$ = number of men in twelve lines front and rear.
$12(x - 24)$ = number of men on a side,
$12(x - 24) \times 2$ = number of men on both sides.
Then $24x + 12(x - 24) \times 2$ = whole number of men.
But 1296 = whole number of men.
$\therefore 24x + 12(x - 24) \times 2 = 1296$.
Whence, $x = 39$.

74. A person starts from P and walks towards Q at the rate of 3 miles an hour; 20 minutes later another person starts from Q and walks towards P at the rate of four miles an hour. The distance from P to Q is 20 miles. How far from P will they meet?

Let x = number of miles first travels.

Then $20 - x$ = number of miles second travels,

$\frac{x}{3}$ = number of hours first travels,

$\frac{20-x}{4}$ = number of hours second travels.

$\therefore \frac{x}{3} = \frac{20-x}{4} + \frac{1}{3}$. Whence, $x = 9\frac{1}{7}$.

75. A person engaged to work a days on these conditions: for each day he worked he was to receive b cents, and for each day he was idle he was to forfeit c cents. At the end of a days he received d cents. How many days was he idle?

Let x = number of days he was idle.

Then $a - x$ = number of days he worked,

and cx = number of cents he forfeited,

$b(a-x)$ = number of cents he received,

$(ab - bx) - cx$ = whole amount.

But d = whole amount.

$\therefore (ab - bx) - cx = d.$

Whence, $x = \frac{ab-d}{b+c}$.

76. A banker has two kinds of coins: it takes a pieces of the first to make a dollar, and b pieces of the second to make a dollar. A person wishes to obtain c pieces for a dollar. How many pieces of each kind must the banker give him?

Let x = number of pieces of first kind.

Then $c - x$ = number of pieces of second kind,

$\frac{1}{a}$ = the part of a dollar in one piece of first,

$\frac{1}{b}$ = the part of a dollar in one piece of second.

$\therefore \frac{x}{a} + \frac{c-x}{b} = 1.$

Whence, $x = \frac{a(b-c)}{b-a}$, and $c - x = \frac{b(c-a)}{b-a}$.

EXERCISE 62.

1.

$$2x+3y=7 \quad (1)$$
$$4x-5y=3 \quad (2)$$

Multiply (1) by 2,

$$4x+6y=14$$

(2) is $\quad 4x-5y=3$

Subtract, $\quad 11y=11$

$$\therefore y=1$$

Substitute value of y in (2),

$$4x-5=3.$$
$$\therefore x=2.$$

2.

$$x-2y=4 \quad (1)$$
$$2x-y=5 \quad (2)$$

Multiply (1) by 2,

$$2x-4y=8$$

(2) is $\quad 2x-y=5$

Subtract, $\quad -3y=3$

$$\therefore y=-1.$$

Substitute value of y in (2),

$$x+2=4.$$
$$\therefore x=2.$$

3.

$$7x+2y=30 \quad (1)$$
$$-3x+y=2 \quad (2)$$

(1) is $\quad 7x+2y=30$

(2) by 2, $\quad -6x+2y=4$

Subtract, $\quad 13x=26$

$$\therefore x=2.$$

Substitute value of x in (1),

$$14+2y=30,$$
$$2y=16.$$
$$\therefore y=8.$$

4.

$$3x-5y=51 \quad (1)$$
$$2x+7y=3 \quad (2)$$

Multiply (1) by 2, and (2) by 3,

$$6x-10y=102$$
$$6x+21y=9$$

Subtract, $\quad -31y=93$

$$\therefore y=-3.$$

Substitute value of y in (1),

$$3x+15=51,$$
$$3x=36.$$
$$\therefore x=12.$$

5.

$$5x+4y=58 \quad (1)$$
$$3x+7y=67 \quad (2)$$

Multiply (1) by 3, and (2) by 5,

$$15x+12y=174$$
$$15x+35y=335$$

Subtract, $\quad -23y=-161$

$$\therefore y=7.$$

Substitute value of y in (1),

$$5x+28=58.$$
$$\therefore x=6.$$

6.

$$3x+2y=39 \quad (1)$$
$$3y-2x=13 \quad (2)$$

Multiply (1) by 3, and (2) by 2,

$$9x+6y=117$$
$$-4x+6y=26$$

Subtract, $\quad 13x=91$

$$\therefore x=7.$$

Substitute value of x in (1),

$$21+2y=39, \quad 2y=18.$$
$$\therefore y=9.$$

7.

$$3x-4y=-5 \quad (1)$$
$$4x-5y=1 \quad (2)$$

Multiply (1) by 4 and (2) by 3,

$$12x-16y=-20$$
$$12x-15y=3$$

Subtract, $\quad -y=-23$

$$\therefore y=23.$$

Substitute value of y in (1),

$$3x-92=-5, \quad 3x=87.$$
$$\therefore x=29.$$

8.

$$11x+3y=100 \quad (1)$$
$$4x-7y=4 \quad (2)$$

Multiply (1) by 4 and (2) by 11,

$$44x+12y=400$$
$$44x-77y=44$$

Subtract, $\quad 89y=356$

$$\therefore y=4.$$

Substitute value of y in (1),

$$11x+12=100, \quad 11x=88.$$
$$\therefore x=8.$$

9. $x + 49y = 693$ (1)
$49x + y = 357$ (2)
Add, $50x + 50y = 1050$ (3)
Divide by 50, $x + y = 21$ (4)
Subtract (4) from (1),
$48y = 672.$
$\therefore y = 14.$
Subtract (4) from (2),
$48x = 336.$
$\therefore x = 7.$

10. $17x + 3y = 57$ (1)
$-3x + 16y = 23$ (2)
Multiply (1) by 3 and (2) by 17,
$51x + 9y = 171$
$-51x + 272y = 391$
Add, $281y = 562$
$\therefore y = 2.$
Substitute value of y in (2),
$3x + 32 = 23,$
$-3x = -9.$
$\therefore x = 3.$

11. $12x + 7y = 176$ (1)
$3y - 19x = 3$ (2)
Multiply (1) by 3 and (2) by 7,
$36x + 21y = 528$ (3)
$-133x + 21y = 21$
Subt., $169x = 507$
$\therefore x = 3.$
Substitute value of x in (2),
$3y - 57 = 3,$
$3y = 60.$
$\therefore y = 20.$

12. $2x - 7y = 8$ (1)
$-9x + 4y = 19$ (2)
Multiply (1) by 4 and (2) by 7,
$8x - 28y = 32$ (3)
$-63x + 28y = 133$ (4)
Add, $-55x = 165$
$\therefore x = -3.$
Substitute value of x in (2),
$27 + 4y = 19,$
$4y = -8.$
$\therefore y = -2.$

13. $69y - 17x = 103$ (1)
$14x - 13y = -41$ (2)
Multiply (1) by 14, and (2) by 17,
$-238x + 966y = 1442$ (3)
$238x - 221y = -697$ (4)
Add $745y = 745$
$\therefore y = 1.$
Substitute value of y in (2),
$14x - 13 = -41,$
$14x = -28.$
$\therefore x = -2.$

14. $17x + 30y = 59$ (1)
$19x + 28y = 77$ (2)
Multiply (1) by 14, and (2) by 15,
$238x + 420y = 826$ (3)
$285x + 420y = 1155$ (4)
$-47x = -329$
$\therefore x = 7.$
Substitute value of x in (2),
$133 + 28y = 77,$
$28y = -56.$
$\therefore y = -2.$

EXERCISE 63.

1. $3x - 4y = 2$ (1)
$7x - 9y = 7$ (2)

Transpose $-4y$ in (1),
$3x = 2 + 4y$.
Divide by coefficient of x,
$x = \frac{2+4y}{3}$.
Substitute value of x in (2),
$7\left(\frac{2+4y}{3}\right) - 9y = 7$.
Simplify,
$14 + 28y - 27y = 21$.
$\therefore y = 7$.
Substitute value of y in (1),
$3x - 28 = 2$,
$3x = 30$.
$\therefore x = 10$.

2. $7x - 5y = 24$ (1)
$4x - 3y = 11$ (2)

Transpose $5y$ in (1),
$7x = 24 + 5y$.
Divide by coefficient of x,
$x = \frac{24+5y}{7}$.
Substitute value of x in (2),
$4\left(\frac{24+5y}{7}\right) - 3y = 11$.
Simplify,
$96 + 20y - 21y = 77$,
$-y = -19$.
$\therefore y = 19$.
Substitute value of y in (1),
$7x - 95 = 24$,
$7x = 119$.
$\therefore x = 17$.

3. $3x + 2y = 32$ (1)
$20x - 3y = 1$ (2)

Transpose $2y$ in (1),
$3x = 32 - 3y$.
Divide by coefficient of x,
$x = \frac{32-2y}{3}$.
Substitute value of x in (2),
$20\left(\frac{32-2y}{3}\right) - 3y = 1$,
$\frac{640-40y}{3} - 3y = 1$.
Simplify,
$640 - 40y - 9y = 3$,
$-49y = -637$.
$\therefore y = 13$.
Substitute value of y in (1),
$3x + 26 = 32$.
$\therefore x = 2$.

4. $11x - 7y = 37$ (1)
$8x + 9y = 41$ (2)

Transpose $7y$ in (1),
$11x = 37 + 7y$.
Divide by coefficient of x,
$x = \frac{37+7y}{11}$.
Substitute value of x in (2),
$8\left(\frac{37+7y}{11}\right) + 9y = 41$.
Simplify,
$296 + 56y + 99y = 451$,
$155y = 155$.
$\therefore y = 1$.
Substitute value of y in (2),
$8x + 9 = 41$.
$\therefore x = 4$.

5. $7x + 5y = 60$ (1)
$13x - 11y = 10$ (2)

Transpose $5y$ in (1),
$7x = 60 - 5y.$

Divide by coefficient of x,
$x = \frac{60 - 5y}{7}.$

Substitute value of x in (2),
$13\left(\frac{60 - 5y}{7}\right) - 11y = 10.$

Simplify,
$780 - 65y - 77y = 70,$
$780 - 142y = 70,$
$142y = 710.$
$\therefore y = 5.$

Substitute value of y in (1),
$7x + 25 = 60,$
$7x = 35.$
$\therefore x = 5.$

6. $6x - 7y = 42$ (1)
$7x - 6y = 75$ (2)

Transpose $7y$ in (1),
$6x = 42 + 7y.$

Divide by coefficient of x,
$x = \frac{42 + 7y}{6}.$

Substitute value of x in (2),
$7\left(\frac{42 + 7y}{6}\right) - 6y = 75.$

Simplify,
$294 + 49y - 36y = 450,$
$13y = 156.$
$\therefore y = 12.$

Substitute value of y in (1),
$6x - 84 = 42.$
$\therefore x = 21.$

7. $10x + 9y = 290$ (1)
$12x - 11y = 130$ (2)

Transpose $9y$ in (1),
$10x = 290 - 9y.$

Divide by coefficient of x,
$x = \frac{290 - 9y}{10}.$

Substitute value of x in (2),
$12\left(\frac{290 - 9y}{10}\right) - 11y = 130.$

Simplify,
$3480 - 108y - 110y = 1300,$
$218y = 2180.$
$\therefore y = 10.$

Substitute value of y in (1),
$10x + 90 = 290,$
$10x = 200.$
$\therefore x = 20.$

8. $3x - 4y = 18$ (1)
$3x + 2y = 0$ (2)

Transpose $4y$ in (1),
$3x = 18 + 4y.$

Divide by coefficient of x,
$x = \frac{18 + 4y}{3}.$

Substitute value of x in (2),
$3\left(\frac{18 + 4y}{3}\right) + 2y = 0.$

Simplify,
$54 + 12y + 6y = 0,$
$18y = -54.$
$\therefore y = -3.$

Substitute value of y in (2),
$3x - 6 = 0.$
$\therefore x = 2.$

9. $9x - 5y = 52$ (1)
$8y - 3x = 8$ (2)

Transpose $5y$ in (1),
$9x = 52 + 5y.$

Divide by coefficient of x,
$x = \frac{52 + 5y}{9}.$

Substitute value of x in (2),
$8y - 3\left(\frac{52 + 5y}{9}\right) = 8.$

Simplify,
$72y - 156 - 15y = 72,$
$57y = 228.$
$\therefore y = 4.$

Substitute value of y in (1),
$9x - 20 = 52,$
$9x = 72.$
$\therefore x = 8.$

10. $5x - 3y = 4$ (1)
$12y - 7x = 10$ (2)

Transpose $-3y$ in (1),
$5x = 4 + 3y.$

Divide by coefficient of x,
$x = \frac{4 + 3y}{5}.$

Substitute value of x in (2),
$12y - 7\left(\frac{4 + 3y}{5}\right) = 10.$

Simplify,
$60y - 28 - 21y = 50,$
$39y = 78.$
$\therefore y = 2.$

Substitute value of y in (1),
$5x - 6 = 4,$
$5x = 10.$
$\therefore x = 2.$

11. $9y - 7x = 13$ (1)
$15x - 7y = 9$ (2)

Transpose $-7x$ in (1),
$9y = 13 + 7x.$

Divide by coefficient of y,
$y = \frac{13 + 7x}{9}.$

Substitute value of y in (2),
$15x - 7\left(\frac{13 + 7x}{9}\right) = 9.$

Simplify,
$135x - 91 - 49x = 81,$
$86x = 172.$
$\therefore x = 2.$

Substitute value of x in (1),
$9y - 14 = 13.$
$\therefore y = 3.$

12. $5x - 2y = 51$ (1)
$19x - 3y = 180$ (2)

Transpose $2y$ in (1),
$5x = 51 + 2y.$

Divide by coefficient of x,
$x = \frac{51 + 2y}{5}.$

Substitute value of x in (2),
$19\left(\frac{51 + 2y}{5}\right) - 3y = 180.$

Simplify,
$969 + 38y - 15y = 900,$
$23y = -69.$
$\therefore y = -3.$

Substitute value of y in (1),
$5x + 6 = 51,$
$5x = 45.$
$\therefore x = 9.$

13. $4x + 9y = 106$ (1)
$8x + 17y = 198$ (2)

Transpose $9y$ in (1),
$4x = 106 - 9y.$

Divide by coefficient of x,
$x = \frac{106 - 9y}{4}.$

Substitute value of x in (2),
$8\left(\frac{106 - 9y}{4}\right) + 17y = 198.$

Simplify,
$212 - 18y + 17y = 198.$
$\therefore y = 14.$

Substitute value of y in (1),
$4x + 126 = 106,$
$4x = -20.$
$\therefore x = -5.$

14. $8x + 3y = 3$ (1)
$12x + 9y = 3$ (2)

Transpose $3y$ in (1),
$8x = 3 - 3y.$

Divide by coefficient of x,
$x = \frac{3 - 3y}{8}.$

Substitute value of x in (2),
$12\left(\frac{3 - 3y}{8}\right) + 9y = 3.$

Simplify,
$9 - 9y + 18y = 6,$
$9y = -3.$
$\therefore y = -\frac{1}{3}.$

Substitute value of y in (1),
$8x - 1 = 3,$
$8x = 4.$
$\therefore x = \frac{1}{2}.$

EXERCISE 64.

1. $x + 15y = 53$ (1)
$3x + y = 27$ (2)

Transpose $15y$ in (1) and y in (2),
$x = 53 - 15y$ (3)
$3x = 27 - y$ (4)

Divide (4) by 3,
$x = \frac{27 - y}{3}$ (5)

Equate values of x,
$53 - 15y = \frac{27 - y}{3}$ (6)

Reduce,
$159 - 45y = 27 - y,$
$44y = 132.$
$\therefore y = 3.$

Substitute value of y in (2),
$3x + 3 = 27,$
$3x = 24.$
$\therefore x = 8.$

2. $4x + 9y = 51$ (1)
$8x - 13y = 9$ (2)

Transpose $9y$ in (1), and $-13y$ in (2),
$4x = 51 - 9y$ (3)
$8x = 9 + 13y$ (4)

Divide (3) by 4 and (4) by 8,
$x = \frac{51 - 9y}{4}$ (5)
$x = \frac{9 + 13y}{8}$ (6)

Equate values of x,
$\frac{51 - 9y}{4} = \frac{9 + 13y}{8}$ (7)

Reduce,
$102 - 18y = 9 + 13y.$
$\therefore y = 3.$

Substitute value of y in (1),
$4x + 27 = 51.$
$\therefore x = 6.$

3. $4x + 3y = 48$ (1)
$5y - 3x = 22$ (2)

Transpose $3y$ in (1) and $5y$ in (2),
$4x = 48 - 3y$ (3)
$3x = 5y - 22$ (4)

Divide (3) by 4 and (4) by 3,
$x = \frac{48 - 3y}{4}$,
$x = \frac{5y - 22}{3}$.

Equate values of x,
$\frac{48 - 3y}{4} = \frac{5y - 22}{3}$.

Reduce,
$144 - 9y = 20y - 88$,
$-29y = -232$.
$\therefore y = 8$.

Substitute value of y in (1),
$4x + 24 = 48$,
$4x = 24$.
$\therefore x = 6$.

4. $2x + 3y = 43$ (1)
$10x - y = 7$ (2)

Transpose $3y$ in (1) and y in (2),
$2x = 43 - 3y$ (3)
$10x = 7 + y$ (4)

Divide (3) by 2 and (4) by 10,
$x = \frac{43 - 3y}{2}$,
$x = \frac{7 + y}{10}$.

Equate values of x,
$\frac{43 - 3y}{2} = \frac{7 + y}{10}$.

Reduce,
$215 - 15y = 7 + y$,
$-16y = -208$.
$\therefore y = 13$.

Substitute value of y in (1),
$2x + 39 = 43$.
$\therefore x = 2$.

5. $5x - 7y = 33$ (1)
$11x + 12y = 100$ (2)

Transpose $-7y$ in (1) and $12y$ in (2),
$5x = 33 + 7y$ (3)
$11x = 100 - 12y$ (4)

Divide (3) by 5 and (4) by 11,
$x = \frac{33 + 7y}{5}$,
$x = \frac{100 - 12y}{11}$.

Equate values of x,
$\frac{33 + 7y}{5} = \frac{100 - 12y}{11}$.

Reduce,
$363 + 77y = 500 - 60y$,
$147y = 147$.
$\therefore y = 1$.

Substitute value of y in (1),
$5x - 7 = 33$,
$5x = 40$.
$\therefore x = 8$.

6. $5x + 7y = 43$ (1)
$11x + 9y = 69$ (2)

Transpose $9y$ in (2) and $7y$ in (1),
$5x = 43 - 7y$ (3)
$11x = 69 - 9y$ (4)

Divide (3) by 5 and (4) by 11,
$x = \frac{43 - 7y}{5}$,
$x = \frac{69 - 9y}{11}$.

Equate values of x,
$\frac{43 - 7y}{5} = \frac{69 - 9y}{11}$.

Reduce,
$473 - 77y = 345 - 45y$,
$-32y = -128$.
$\therefore y = 4$.

Substitute value of y in (1),
$5x + 28 = 43$.
$\therefore x = 3$.

7. $8x - 21y = 33$ (1)
$6x + 35y = 177$ (2)

Transpose $21y$ in (1) and $35y$ in (2),
$8x = 33 + 21y$ (3)
$6x = 177 - 35y$ (4)

Divide (3) by 8, and (4) by 6,
$$x = \frac{33 + 21y}{8},$$
$$x = \frac{177 - 35y}{6}.$$

Equate values of x,
$$\frac{33 + 21y}{8} = \frac{177 - 35y}{6}.$$

Reduce,
$99 + 63y = 708 - 140y,$
$203y = 609.$
$\therefore y = 3.$

Substitute value of y in (1),
$8x - 63 = 33,$
$8x = 96.$
$\therefore x = 12.$

8. $3y - 7x = 4$ (1)
$2y + 5x = 22$ (2)

Transpose $7x$ in (1) and $5x$ in (2),
$3y = 4 + 7x$ (3)
$2y = 22 - 5x$ (4)

Divide (3) by 3 and (4) by 2,
$$y = \frac{4 + 7x}{3},$$
$$y = \frac{22 - 5x}{2}.$$

Equate values of y,
$$\frac{4 + 7x}{3} = \frac{22 - 5x}{2}.$$

Reduce,
$8 + 14x = 66 - 15x,$
$29x = 58.$
$\therefore x = 2.$

Substitute value of x in (1),
$3y - 14 = 4.$
$\therefore y = 6.$

9. $21y + 20x = 165$ (1)
$77y - 30x = 295$ (2)

Transpose $20x$ in (1) and $30x$ in (2),
$21y = 165 - 20x$ (3)
$77y = 295 + 30x$ (4)

Divide (3) by 21 and (4) by 77,
$$y = \frac{165 - 20x}{21},$$
$$y = \frac{295 + 30x}{77}.$$

Equate values of x,
$$\frac{165 - 20x}{21} = \frac{295 + 30x}{77}.$$

Reduce,
$1815 - 220x = 885 + 90x,$
$-310x = -930.$
$\therefore x = 3.$

Substitute value of x in (1),
$21y + 60 = 165,$
$21y = 105.$
$\therefore y = 5.$

10. $11x - 10y = 14$ (1)
$5x + 7y = 41$ (2)

Transpose $-10y$ in (1) and $7y$ in (2),
$11x = 10y + 14$ (3)
$5x = 41 - 7y$ (4)

Divide (3) by 11 and (4) by 5,
$$x = \frac{10y + 14}{11},$$
$$x = \frac{41 - 7y}{5}.$$

Equate values of x,
$$\frac{10y + 14}{11} = \frac{41 - 7y}{5}.$$

Reduce,
$50y + 70 = 451 - 77y,$
$127y = 381.$
$\therefore y = 3.$

Substitute value of y in (1),
$11x - 30 = 14.$
$\therefore x = 4.$

11. $7y - 3x = 139$ (1)
$2x + 5y = 91$ (2)

Transpose $7y$ in (1) and $5y$ in (2), $3x = 7y - 139$ (3)
$2x = 91 - 5y$ (4)

Divide (3) by 3 and (4) by 2,

$$x = \frac{7y - 139}{3},$$

$$x = \frac{91 - 5y}{2}.$$

Equate values of x,

$$\frac{7y - 139}{3} = \frac{91 - 5y}{2}.$$

Reduce,

$14y - 278 = 273 - 15y,$
$29y = 551.$
$\therefore y = 19.$

Substitute value of y in (4),

$2x = 91 - 95,$
$2x = -4.$
$\therefore x = -2.$

12. $17x + 12y = 59$ (1)
$19x - 4y = 153$ (2)

Transpose $12y$ in (1) and $4y$ in (2), $17x = 59 - 12y$ (3)
$19x = 153 + 4y$ (4)

Divide (3) by 17 and (4) by 19,

$$x = \frac{59 - 12y}{17},$$

$$x = \frac{153 + 4y}{19}.$$

Equate values of x,

$$\frac{153 + 4y}{19} = \frac{59 - 12y}{17}.$$

Reduce,

$2601 + 68y = 1121 - 228y,$
$296y = -1480.$
$\therefore y = -5.$

Substitute value of y in (1),

$17x - 60 = 59.$
$\therefore x = 7.$

13. $24x + 7y = 27$ (1)
$8x - 33y = 115$ (2)

Transpose $7y$ in (1) and $33y$ in (2), $24x = 27 - 7y$ (3)
$8x = 115 + 33y$ (4)

Divide (3) by 24 and (4) by 8,

$$x = \frac{27 - 7y}{24},$$

$$x = \frac{115 + 33y}{8}.$$

Equate values of x,

$$\frac{27 - 7y}{24} = \frac{115 + 33y}{8}.$$

Reduce,

$27 - 7y = 345 + 99y,$
$-106y = 318.$
$\therefore y = -3.$

Substitute value of y in (3),

$24x = 27 + 21,$
$24x = 48.$
$\therefore x = 2.$

14. $x = 3y - 19$ (1)
$y = 3x - 23$ (2)

Transpose $3x$ and y in (2),

$3x = 23 + y$ (3)

Divide (3) by 3,

$$x = \frac{23 + y}{3}.$$

Equate values of x,

$$3y - 19 = \frac{23 + y}{3}.$$

Reduce,

$9y - 57 = 23 + y,$
$8y = 80.$
$\therefore y = 10.$

Substitute value of y in (1),

$x = 30 - 19.$
$\therefore x = 11.$

Exercise 65.

1. $x(y+7) = y(x+1)$ (1)
$2x + 20 = 3y + 1$ (2)

Simplify (1),
$xy + 7x = xy + y.$
Transpose and combine,
$7x - y = 0$ (3)
Transpose and combine (2),
$2x - 3y = -19$ (4)
Multiply (3) by 3,
$21x - 3y = 0$
(4) is $2x - 3y = -19$
Subt., $19x = 19$
$\therefore x = 1.$
Substitute value of x in (3),
$7 - y = 0.$
$\therefore y = 7.$

2. $2x - \frac{y-3}{5} - 4 = 0$ (1)
$3y + \frac{x-2}{3} - 9 = 0$ (2)

Simplify (1),
$10x - y + 3 - 20 = 0.$
Transpose and combine,
$10x - y = 17$ (3)
Simplify (2),
$9y + x - 2 - 27 = 0.$
Transpose and combine,
$x + 9y = 29$ (4)
Multiply (3) by 9,
$90x - 9y = 153$
(4) is $x + 9y = 29$
Add, $91x = 182$
$\therefore x = 2.$
Substitute value of x in (4),
$2 + 9y = 29.$
$\therefore y = 3.$

3. $\frac{2}{x+3} = \frac{3}{y-2}$ (1)
$5(x+3) = 3(y-2) + 2$ (2)

Simplify (1),
$2y - 4 = 3x + 9.$
Transpose and combine,
$2y - 3x = 13$ (3)
Simplify (2),
$5x + 15 = 3y - 6 + 2.$
Transpose and combine,
$5x - 3y = -19$ (4)
Multiply (3) by 3 and (4) by 2,
$6y - 9x = 39$
$-6y + 10x = -38$
Add, $x = 1.$
Substitute value of x in (3),
$2y - 3 = 13.$
$\therefore y = 8.$

4. $\frac{x-4}{5} - \frac{y+2}{10} = 0$ (1)
$\frac{x}{6} + \frac{y-2}{4} = 3$ (2)

Simplify (1),
$2x - 8 - y - 2 = 0,$
$2x - y = 10$ (3)
Simplify (2),
$2x + 3y - 6 = 36,$
$2x + 3y = 42$ (4)
Subtract (4) from (3),
$2x - y = 10$
$2x + 3y = 42$
$-4y = -32$
$\therefore y = 8.$
Substitute value of y in (3),
$2x - 8 = 10.$
$\therefore x = 9.$

5.

$$(x+1)(y+2)-(x+2)(y+1)=-1 \quad (1)$$
$$3(x+3)-4(y+4)=-8 \quad (2)$$

Simplify, (1), $xy+y+2x+2-xy-2y-x-2=-1.$
Combine, $x-y=-1$ (3)
Simplify (2), $3x+9-4y-16=-8.$
Transpose and unite, $3x-4y=-1$ (4)
Multiply (3) by 3, $3x-3y=-3$
Subtract, $-y=2$
$\therefore y=-2.$
Substitute value of y in (3), $x+2=-1.$
$\therefore x=-3.$

6. $\frac{x-2}{5}-\frac{10-x}{3}=\frac{y-10}{4}$ (1)

$\frac{2y+4}{3}-\frac{2x+y}{8}=\frac{x+13}{4}$ (2)

Simplify (1), $12x-24-200+20x=15y-150$
Transpose and combine, $32x-15y=74$ (3)
Simplify (2), $16y+32-6x-3y=6x+78.$
Transpose and combine, $-12x+13y=46$ (4)
Multiply (3) by 3, $96x-45y=222$
Multiply (4) by 8, $-96x+104y=368$
Add, $59y=590$
$\therefore y=10.$
Substitute value of y in (3), $32x-150=74,$
$32x=224.$
$\therefore x=7.$

7. $\frac{x+1}{3}-\frac{y+2}{4}=\frac{2(x-y)}{5}$ (1)

$\frac{x-3}{4}-\frac{y-3}{3}=2y-x$ (2)

Simplify (1), $20x+20-15y-30=24x-24y.$
Transpose and combine, $-4x+9y=10$ (3)
Simplify (2). $3x-9-4y+12=24y-12x.$
Transpose and combine, $15x-28y=-3$ (4)
Multiply (3) by 15, $60x-135y=-150$
Multiply (4) by 4, $60x-112y=-12$
Subtract, $-23y=-138$
$\therefore y=6.$
Substitute value of y in (3), $-4x+54=10,$
$-4x=-44.$
$\therefore x=11.$

8.

$$\frac{3x-2y}{5}+\frac{5x-3y}{3}=x+1 \qquad (1)$$

$$\frac{2x-3y}{3}+\frac{4x-3y}{2}=y+1 \qquad (2)$$

Simplify (1), $9x-6y+25x-15y=15x+15.$

Transpose and combine, $19x-21y=15 \qquad (3)$

Simplify (2), $4x-6y+12x-9y=6y+6.$

Transpose and combine, $16x-21y=6 \qquad (4)$

Subtract (3) from (4),

$$\begin{array}{r} 19x-21y=15 \\ \hline -3x \quad\quad =-9 \\ \therefore x=3. \end{array}$$

Substitute value of x in (4), $48-21y=6,$

$$-21y=-42.$$
$$\therefore y=2.$$

9.

$$\frac{2x-y+3}{3}-\frac{x-2y+3}{4}=4 \qquad (1)$$

$$\frac{3x-4y+3}{4}+\frac{4x-2y-9}{3}=4 \qquad (2)$$

Simplify (1), $8x-4y+12-3x+6y-9=48.$

Transpose and combine, $5x+2y=45 \qquad (3)$

Simplify (2), $9x-12y+9+16x-8y-36=48.$

Transpose and combine, $25x-20y=75 \qquad (4)$

Divide (4) by 5, $5x-4y=15$

(3) is $5x+2y=45$

Subtract, $-6y=-30$

$$\therefore y=5.$$

Substitute value of y in (3), $5x+10=45,$

$$5x=35.$$
$$\therefore x=7.$$

10.

$$1\tfrac{1}{2}x=1\tfrac{1}{3}y+4\tfrac{5}{12} \qquad (1)$$

$$4\tfrac{1}{2}x=\tfrac{1}{3}y-21\tfrac{7}{12} \qquad (2)$$

Simplify (1), $18x-16y=53 \qquad (3)$

Simplify (2), $54x-4y=-259 \qquad (4)$

Multiply (3) by 3, $54x-48y=159$

(4) is $54x-4y=-259$

Subtract, $-44y=418$

$$\therefore y=-9\tfrac{1}{2}.$$

Substitute value of y in (3), $18x+152=53,$

$$18x=-99.$$
$$\therefore x=-5\tfrac{1}{2}.$$

11. $$\frac{13}{x+2y+3} = -\frac{3}{4x-5y+6} \quad (1)$$

$$\frac{3}{6x-5y+4} = \frac{19}{3x+2y+1} \quad (2)$$

Simplify (1), $55x - 59y = -87$ (3)

Simplify (2), $-105x + 101y = 73$ (4)

Transpose $59y$ in (3) and $101y$ in (4), and divide by 55 and 105 respectively,

$$x = \frac{59y - 87}{55},$$

$$x = \frac{101y - 73}{105}.$$

Equate values of x, $$\frac{59y - 87}{55} = \frac{101y - 73}{105}.$$

Simplify, $$1239y - 1827 = 1111y - 803,$$

$$128y = 1024.$$

$$\therefore y = 8.$$

Substitute value of y in (3), $$55x - 472 = -87,$$

$$55x = 385.$$

$$\therefore x = 7.$$

12. $$\frac{x+y}{y-x} = \frac{15}{8} \quad (1)$$

$$9x - \frac{3y+44}{7} = 100 \quad (2)$$

Simplify (1), $8x + 8y = 15y - 15x.$

Transpose and combine, $23x - 7y = 0$ (3)

Simplify (2), $63x - 3y - 44 = 700.$

Transpose and combine, $63x - 3y = 744$ (4)

Multiply (3) by 3, $69x - 21y = 0$

Multiply (4) by 7, $441x - 21y = 5208$

Subtract, $-372x = -5208$

$$\therefore x = 14.$$

Substitute value of x in (3), $$322 - 7y = 0,$$

$$-7y = -322.$$

$$\therefore y = 46.$$

13.

$$\frac{3x-5y}{2}+3=\frac{2x+y}{5} \quad (1)$$

$$8-\frac{x-2y}{4}=\frac{x}{2}+\frac{y}{3} \quad (2)$$

Simplify (1), $15x-25y+30=4x+2y.$

Transpose and combine, $11x-27y=-30$ (3)

Simplify (2), $96-3x+6y=6x+4y.$

Transpose and combine, $-9x+2y=-96$ (4)

Multiply (3) by 9, $99x-243y=-270$

Multiply (4) by -11, $99x-22y=1056$

Subtract, $-221y=-1326$

$\therefore y=6.$

Substitute value of y in (4), $-9x+12=-96.$

$\therefore x=12.$

14. $$\frac{4x-3y-7}{5}=\frac{3x}{10}-\frac{2y}{15}-\frac{5}{6} \quad (1)$$

$$\frac{y-1}{3}+\frac{x}{2}-\frac{3y}{20}-1=\frac{y-x}{15}+\frac{x}{6}+\frac{1}{10} \quad (2)$$

Simplify (1), $24x-18y-42=9x-4y-25.$

Transpose and combine, $15x-14y=17$ (3)

Simplify (2), $20y-20+30x-9y-60=4y-4x+10x+6.$

Transpose and combine, $24x+7y=86$ (4)

Multiply (4) by 2, $48x+14y=172$ (5)

(3) is $15x-14y=17$

Add (3) and (5), $63x=189$

$\therefore x=3.$

Substitute value of x in (3), $45-14y=17.$

$\therefore y=2.$

15. $$\frac{x-4}{5}=\frac{y+2}{10} \quad (1)$$

$$\frac{x}{6}+\frac{y-2}{4}=3 \quad (2)$$

Simplify (1), $2x-8=y+2.$

Transpose and combine, $2x-y=10$ (3)

Simplify (2), $2x+3y-6=36.$

Transpose and combine, $2x+3y=42$ (4)

$2x-y=10$ (3)

Subtract, $4y=32$

$\therefore y=8.$

Substitute value of y in (4), $2x+24=42.$

$\therefore x=9.$

16. $\frac{3x+12y}{11}=9$ (1)

$\frac{1-3x}{7}=\frac{11-3y}{5}$ (2)

Simplify (1) and (2),

$3x+12y=99$ (3)

$15x-21y=-72$ (4)

Divide (3) by 3 and (4) by 15,

$x=\frac{99-12y}{3}$.

$x=\frac{-72+21y}{15}$.

Equate values of x,

$\frac{99-12y}{3}=\frac{-72+21y}{15}$.

Simplify,

$495-60y=-72+21y$,

$-81y=-567$.

$\therefore y=7$.

Substitute value of y in (3),

$3x+84=99$.

$\therefore x=5$.

17. $5x-\frac{1}{4}(5y+2)=32$ (1)

$3y+\frac{1}{3}(x+2)=9$ (2)

Simplify (1) and (2),

$20x-5y=130$ (3)

$x+9y=25$ (4)

Multiply (4) by 20,

$20x+180y=500$ (5)

$20x-5y=130$ (3)

Subtract, $185y=370$

$\therefore y=2$.

Substitute value of y in (3),

$20x-10=130$.

$\therefore x=7$.

18. $3x-0.25y=28$ (1)

$0.12x+0.7y=2.54$ (2)

Multiply (1) by 0.04,

$0.12x-0.01y=1.12$ (3)

$0.12x+0.7y=2.54$ (2)

Subtract, $-0.71y=-1.42$

$\therefore y=2$.

Substitute value of y in (1),

$3x-0.5=28$.

$\therefore x=9.5$.

19. $7(x-1)=3(y+8)$ (1)

$\frac{4x+2}{9}=\frac{5y+9}{2}$ (2)

Simplify (1) and (2),

$7x-7=3y+24$,

$7x-3y=31$ (3)

$8x+4=45y+81$,

$8x-45y=77$ (4)

Multiply (3) by 8 and (4) by 7,

$56x-24y=248$

$56x-315y=539$

Subtract, $291y=-291$

$\therefore y=-1$.

Substitute value of y in (3),

$7x+3=31$.

$\therefore x=4$.

20. $7x+\frac{1}{2}(2y+4)=16$ (1)

$3y-\frac{1}{4}(x+2)=8$ (2)

Simplify (1),

$35x+2y+4=80.$

Transpose and combine,

$35x+2y=76$ (3)

Simplify (2),

$12y-x-2=32.$

Transpose and combine,

$12y-x=34$ (4)

Multiply (4) by 35,

$-35x+420y=1190$

$35x+2y=76$ (3)

$422y=1266$

$\therefore y=3.$

Substitute value of y in (3),

$35x+6=76,$

$35x=70.$

$\therefore x=2.$

21. $\frac{5x-6y}{13}+3x=4y-2$ (1)

$\frac{5x+6y}{6}-\frac{3x-2y}{4}=2y-2$ (2)

Simplify (1),

$5x-6y+39x=52y-26.$

Transpose and combine,

$44x-58y=-26$ (3)

Simplify (2),

$10x+12y-9x+6y=24y-24.$

Transpose and combine,

$x-6y=-24$ (4)

Multiply (4) by 44,

$44x-264y=-1056$

$44x-58y=-26$ (3)

$206y=1030$

$\therefore y=5.$

Substitute value of y in (4),

$x-30=-24.$

$\therefore x=6.$

22.

$$\frac{5x-3}{2}-\frac{3x-19}{2}=4-\frac{3y-x}{3} \quad (1)$$

$$\frac{2x+y}{2}-\frac{9x-7}{8}=\frac{3(y+3)}{4}-\frac{4x+5y}{16} \quad (2)$$

Simplify (1), $15x-9-9x+57=24-6y+2x.$

Simplify (2), $16x+8y-18x+14=12y+36-4x-5y.$

Transpose and combine (1), $4x+6y=-24$ (3)

Transpose and combine (2), $2x+y=22$ (4)

Divide (1) by 2, $2x+3y=-12$

$2y=-34$

$\therefore y=-17.$

Substitute value of y in (4), $2x-17=22,$

$2x=39.$

$\therefore x=19\frac{1}{2}.$

23.

$$3y+11=\frac{4x^2-y(x+3y)}{x-y+4}+31-4x \quad (1)$$

$$(x+7)(y-2)+3=2xy-(y-1)(x+1) \quad (2)$$

Simplify (1), $3xy-3y^2+12y+11x-11y+44$
$=4x^2-xy-3y^2+31x-31y+124-4x^2+4xy-16x$ (3)

Transpose and combine, $32y-4x=80$ (4)

Divide by 4, $8y-x=20$ (5)

Simplify (2), $xy+7y-2x-14+3=2xy-xy-y+x+1$ (6)

Transpose and combine, $8y-3x=12$

Subtract (5), $8y-x=20$

$-2x=-8$

$\therefore x=4.$

Substitute value of x in (5), $8y-4=20,$

$8y=24.$

$\therefore y=3.$

24.

$$\frac{6x+9}{4}+\frac{3x+5y}{4x-6}=3\tfrac{1}{4}+\frac{3x+4}{2} \quad (1)$$

$$\frac{8y+7}{10}+\frac{6x-3y}{2y-8}=4+\frac{4y-9}{5} \quad (2)$$

Multiply (1) by 4, $6x+9+\frac{6x+10y}{2x-3}=13+6x+8.$

Transpose and combine, $\frac{6x+10y}{2x-3}=12.$

Divide both sides by (2), $\frac{3x+5y}{2x-3}=6.$

Multiply by $2x-3$, $3x+5y=12x-18.$

Transpose and combine, $-9x+5y=-18$ (3)

Multiply (2) by 10 $8y+7+\frac{30x-15y}{y-4}=40+8y-18.$

Transpose and combine, $\frac{30x-15y}{y-4}=15.$

Divide both sides by 15, $\frac{2x-y}{y-4}=1.$

Multiply by $y-4$, $2x-y=y-4.$

Transpose and combine, $2x-2y=-4.$

Divide by 2, $x-y=-2$ (4)

Multiply (3) by 1 and (4) by 9, $-9x+5y=-18$

$9x-9y=-18$

Add, $-4y=-36$

$\therefore y=9.$

Substitute value of y in (4), $x-9=-2.$

$\therefore x=7.$

25. $x - \frac{2y-x}{23-x} = 20 - \frac{59-2x}{2}$ (1)

$y + \frac{y-3}{x-18} = 30 - \frac{73-3y}{3}$ (2)

Multiply (1) by 2, $2x - \frac{4y-2x}{23-x} = 40 - 59 + 2x.$

Transpose and combine, $\frac{4y-2x}{23-x} = 19.$

Multiply by $23-x$, $4y - 2x = 437 - 19x.$

Transpose and combine, $4y + 17x = 437$ (3)

Multiply both sides of (2) by 3, $3y + \frac{3y-9}{x-18} = 90 - 73 + 3y.$

Transpose and combine, $\frac{3y-9}{x-18} = 17.$

Multiply by $x-18$, $3y - 9 = 17x - 306.$

Transpose and combine, $3y - 17x = -297$ (4)

Add (3), $\begin{array}{rl} 4y + 17x = & 437 \\ 7y \quad = & 140 \end{array}$

$\therefore y = 20.$

Substitute value of y in (3), $80 + 17x = 437,$

$17x = 357.$

$\therefore x = 21.$

EXERCISE 66.

1. $x + y = a$ (1)

$x - y = b$ (2)

Add, $2x = a + b$

$\therefore x = \frac{a+b}{2}.$

Subtract (2) from (1), $2y = a - b.$

$\therefore y = \frac{a-b}{2}.$

2. $ax + by = c$ (1)

$px + qy = r$ (2)

Multiply (1) by p and (2) by a,

$apx + bpy = cp$ (3)

$apx + aqy = ar$ (4)

Subt., $y(bp - aq) = cp - ar.$

$\therefore y = \frac{cp-ar}{bp-aq}.$

Multiply (1) by q and (2) by b,

$aqx + bqy = cq$

$bpx + bqy = br$

Subt., $(aq - bp)x = cq - br$

$\therefore x = \frac{cq-br}{aq-bp}.$

3. $mx + ny = a$ (1)

$px + qy = b$ (2)

Multiply (1) by p and (2) by m,

$mpx + npy = ap$ (3)

$mpx + mqy = mb$ (4)

Sub., $(np - mq)y = ap - mb$

$$\therefore y = \frac{ap - mb}{np - mq}.$$

Multiply (1) by q and (2) by n,

$mqx + nqy = aq$

$npx + nqy = nb$

Sub., $(mq - np)x = aq - nb$

$$\therefore x = \frac{aq - nb}{mq - np}.$$

4. $ax + by = e$ (1)

$ax + cy = d$ (2)

Subt., $(b - c)y = e - d$

$$\therefore y = \frac{e - d}{b - c}.$$

Multiply (1) by c and (2) by b,

$acx + bcy = ce$

$abx + bcy = bd$

Subt., $(ac - ab)x = ce - bd$

$$\therefore x = \frac{ce - bd}{a(c - b)}.$$

5. $mx - ny = r$ (1)

$m'x + n'y = r'$ (2)

Multiply (1) by m', $mm'x - m'ny = m'r$ (3)

Multiply (2) by m, $mm'x + mn'y = mr'$ (4)

Subtract, $(m'n + mn')y = mr' - m'r$

$$\therefore y = \frac{mr' - m'r}{m'n + mn'}.$$

Multiply (1) by n', $mn'x - nn'y = n'r$

Multiply (2) by n, $m'nx + nn'y = nr'$

Add, $(mn' + m'n)x = n'r + nr'$

$$\therefore x = \frac{n'r + nr'}{mn' + m'n}.$$

6. $ax + by = c$ (1)

$dx + fy = c$ (2)

Multiply (1) by d, $adx + bdy = cd$

Multiply (2) by a, $adx + afy = ac$

Subtract, $bdy - afy = cd - ac$

$$\therefore y = \frac{c(d - a)}{bd - af}.$$

Multiply (1) by f, $afx + bfy = cf$

Multiply (2) by b, $bdx + bfy = bc$

Subtract, $(af - bd)x = cf - bc$

$$\therefore x = \frac{c(f - b)}{af - bd}.$$

25. $x - \dfrac{2y - x}{23 - x} = 20 - \dfrac{59 - 2x}{2}$ (1)

$y + \dfrac{y - 3}{x - 18} = 30 - \dfrac{73 - 3y}{3}$ (2)

Multiply (1) by 2, $2x - \dfrac{4y - 2x}{23 - x} = 40 - 59 + 2x.$

Transpose and combine, $\dfrac{4y - 2x}{23 - x} = 19.$

Multiply by $23 - x$, $4y - 2x = 437 - 19x.$

Transpose and combine, $4y + 17x = 437$ (3)

Multiply both sides of (2) by 3, $3y + \dfrac{3y - 9}{x - 18} = 90 - 73 + 3y.$

Transpose and combine, $\dfrac{3y - 9}{x - 18} = 17.$

Multiply by $x - 18$, $3y - 9 = 17x - 306.$

Transpose and combine, $3y - 17x = -297$ (4)

Add (3), $4y + 17x = 437$

$7y = 140$

$\therefore y = 20.$

Substitute value of y in (3), $80 + 17x = 437,$

$17x = 357.$

$\therefore x = 21.$

Exercise 66.

1. $x + y = a$ (1)

$x - y = b$ (2)

Add, $2x = a + b$

$\therefore x = \dfrac{a + b}{2}.$

Subtract (2) from (1),

$2y = a - b.$

$\therefore y = \dfrac{a - b}{2}.$

2. $ax + by = c$ (1)

$px + qy = r$ (2)

Multiply (1) by p and (2) by a,

$apx + bpy = cp$ (3)

$apx + aqy = ar$ (4)

Subt., $y(bp - aq) = cp - ar.$

$\therefore y = \dfrac{cp - ar}{bp - aq}.$

Multiply (1) by q and (2) by b,

$aqx + bqy = cq$

$bpx + bqy = br$

Subt., $(aq - bp)x = cq - br$

$\therefore x = \dfrac{cq - br}{aq - bp}.$

3. $mx + ny = a$ (1)

$px + qy = b$ (2)

Multiply (1) by p and (2) by m,

$mpx + npy = ap$ (3)

$mpx + mqy = mb$ (4)

Sub., $(np - mq)y = ap - mb$

$\therefore y = \frac{ap - mb}{np - mq}$.

Multiply (1) by q and (2) by n,

$mqx + nqy = aq$

$npx + nqy = nb$

Sub., $(mq - np)x = aq - nb$

$\therefore x = \frac{aq - nb}{mq - np}$.

4. $ax + by = c$ (1)

$ax + cy = d$ (2)

Subt., $(b - c)y = c - d$

$\therefore y = \frac{c - d}{b - c}$.

Multiply (1) by c and (2) by b,

$acx + bcy = ce$

$abx + bcy = bd$

Subt., $(ac - ab)x = ce - bd$

$\therefore x = \frac{ce - bd}{a(c - b)}$.

5. $mx - ny = r$ (1)

$m'x + n'y = r'$ (2)

Multiply (1) by m', $mm'x - m'ny = m'r$ (3)

Multiply (2) by m, $mm'x + mn'y = mr'$ (4)

Subtract, $(m'n + mn')y = mr' - m'r$

$\therefore y = \frac{mr' - m'r}{m'n + mn'}$.

Multiply (1) by n', $mn'x - nn'y = n'r$

Multiply (2) by n, $m'nx + nn'y = nr'$

Add, $(mn' + m'n)x = n'r + nr'$

$\therefore x = \frac{n'r + nr'}{mn' + m'n}$.

6. $ax + by = c$ (1)

$dx + fy = c^2$ (2)

Multiply (1) by d, $adx + bdy = cd$

Multiply (2) by a, $adx + afy = ac^2$

Subtract, $bdy - afy = cd - ac^2$

$\therefore y = \frac{c(d - ac)}{bd - af}$.

Multiply (1) by f, $afx + bfy = cf$

Multiply (2) by b, $bdx + bfy = bc^2$

Subtract, $(af - bd)x = cf - bc^2$

$\therefore x = \frac{c(f - bc)}{af - bd}$.

13. $ax = by + \frac{a^2 + b^2}{2}$ (1)

$(a - b)x = (a + b)y$ (2)

Simplify (1), $2ax - 2by = a^2 + b^2$ (3)

Simplify (2), $ax - bx - ay - by = 0$ (4)

In (3), $x = \frac{a^2 + b^2 + 2by}{2a}$.

In (4), $x = \frac{ay + by}{a - b}$.

Equate values of x, $\frac{a^2 + b^2 + 2by}{2a} = \frac{ay + by}{a - b}$.

Simplify,

$a^3 + ab^2 + 2aby - a^2b - b^3 - 2b^2y = 2a^2y + 2aby$.

Transpose and combine, $2a^2y + 2b^2y = a^3 - a^2b + ab^2 - b^3$,

$\therefore y = \frac{a - b}{2}$.

Substitute value of y in (1), $ax = \frac{ab - b^2}{2} + \frac{a^2 + b^2}{2}$,

$ax = \frac{a^2 + ab}{2}$.

$\therefore x = \frac{a + b}{2}$.

14.

$ax + by = c^2$ (1)

$\frac{a}{b + y} - \frac{b}{a + x} = 0$ (2)

Simplify (2), $ax - by = -a^2 + b^2$ (3)

Add (1) and (3),

$$\begin{array}{r} ax + by = c^2 \\ ax - by = -a^2 + b^2 \\ \hline 2ax = c^2 - a^2 + b^2 \end{array}$$

$\therefore x = \frac{c^2 - a^2 + b^2}{2a}$.

Subtract (3) from (1),

$$\begin{array}{r} ax + by = c^2 \\ ax - by = -a^2 + b^2 \\ \hline 2by = c^2 + a^2 - b^2 \end{array}$$

$\therefore y = \frac{c^2 + a^2 - b^2}{2b}$.

15.

$$\frac{x}{a+b} + \frac{y}{a-b} = 2a \qquad (1)$$

$$\frac{x-y}{2ab} = \frac{x+y}{a^2+b^2} \qquad (2)$$

Clear (1) of fractions, $ax - bx + ay + by = 2a^3 - 2ab^2$ (3)

Clear (2) of fractions, $a^2x + b^2x - a^2y - b^2y = 2abx + 2aby$ (4)

In (3), $$y = \frac{2a^3 - 2ab^2 - ax + bx}{a+b}$$

In (4), $$y = \frac{a^2x - 2abx + b^2x}{a^2 + 2ab + b^2}.$$

Hence, $$\frac{2a^3 - 2ab^2 - ax + bx}{a+b} = \frac{a^2x - 2abx + b^2x}{a^2 + 2ab + b^2},$$

$$2a^4 - 2a^2b^2 - a^2x + 2a^3b - 2ab^3 + b^2x = a^2x - 2abx + b^2x.$$

Transpose and combine, $2a^2x - 2abx = 2a^4 - 2a^2b^2 + 2a^3b - 2ab^3.$

Divide by $2a$, $$ax - bx = a^3 - ab^2 + a^2b - b^3$$

$$\therefore x = \frac{a^3 - ab^2 + a^2b - b^3}{a-b}$$

$$\text{or, } x = a^2 + 2ab + b^2.$$

Substitute value of x in (3),

$$a^3 + 2a^2b + ab^2 - a^2b - 2ab^2 - b^3 + ay + by = 2a^3 - 2ab^2.$$

Transpose and combine, $$ay + by = a^3 - a^2b - ab^2 + b^3.$$

$$\therefore y = \frac{a^3 - a^2b - ab^2 + b^3}{a+b},$$

$$\text{or, } y = a^2 - 2ab + b^2.$$

16.

$$bx - bc = ay - ac \qquad (1)$$

$$x - y = a - b \qquad (2)$$

Transpose (1), $$bx - ay = (b-a)c$$

Multiply (2) by a, $$ax - ay = (a-b)a \qquad (3)$$

Subtract, $$(b-a)x = c(b-a) + a(b-a)$$

$$\therefore x = c + a.$$

$$bx - ay = (b-a)c \qquad (1)$$

Multiply (2) by b, $$bx - by = (a-b)b \qquad (4)$$

Subtract, $$(b-a)y = c(b-a) + b(b-a)$$

$$\therefore y = c + b.$$

13.

$$\frac{3x-5y}{2}+3=\frac{2x+y}{5} \quad (1)$$

$$8-\frac{x-2y}{4}=\frac{x}{2}+\frac{y}{3} \quad (2)$$

Simplify (1), $15x-25y+30=4x+2y.$

Transpose and combine, $11x-27y=-30$ (3)

Simplify (2), $96-3x+6y=6x+4y.$

Transpose and combine, $-9x+2y=-96$ (4)

Multiply (3) by 9, $99x-243y=-270$

Multiply (4) by -11, $99x-22y=1056$

Subtract, $-221y=-1326$

$\therefore y=6.$

Substitute value of y in (4), $-9x+12=-96.$

$\therefore x=12.$

14. $$\frac{4x-3y-7}{5}=\frac{3x}{10}-\frac{2y}{15}-\frac{5}{6} \quad (1)$$

$$\frac{y-1}{3}+\frac{x}{2}-\frac{3y}{20}-1=\frac{y-x}{15}+\frac{x}{6}+\frac{1}{10} \quad (2)$$

Simplify (1), $24x-18y-42=9x-4y-25.$

Transpose and combine, $15x-14y=17$ (3)

Simplify (2), $20y-20+30x-9y-60=4y-4x+10x+6.$

Transpose and combine, $24x+7y=86$ (4)

Multiply (4) by 2, $48x+14y=172$ (5)

(3) is $15x-14y=17$

Add (3) and (5), $63x=189$

$\therefore x=3.$

Substitute value of x in (3), $45-14y=17.$

$\therefore y=2.$

15. $$\frac{x-4}{5}=\frac{y+2}{10} \quad (1)$$

$$\frac{x}{6}+\frac{y-2}{4}=3 \quad (2)$$

Simplify (1), $2x-8=y+2.$

Transpose and combine, $2x-y=10$ (3)

Simplify (2), $2x+3y-6=36.$

Transpose and combine, $2x+3y=42$ (4)

$2x-y=10$ (3)

Subtract, $4y=32$

$\therefore y=8.$

Substitute value of y in (4), $2x+24=42.$

$\therefore x=9.$

16. $\frac{3x+12y}{11}=9$ (1)

$\frac{1-3x}{7}=\frac{11-3y}{5}$ (2)

Simplify (1) and (2),

$3x+12y=99$ (3)

$15x-21y=-72$ (4)

Divide (3) by 3 and (4) by 15,

$x=\frac{99-12y}{3}$.

$x=\frac{-72+21y}{15}$.

Equate values of x,

$\frac{99-12y}{3}=\frac{-72+21y}{15}$.

Simplify,

$495-60y=-72+21y$,

$-81y=-567$.

$\therefore y=7$.

Substitute value of y in (3),

$3x+84=99$.

$\therefore x=5$.

17. $5x-\frac{1}{4}(5y+2)=32$ (1)

$3y+\frac{1}{3}(x+2)=9$ (2)

Simplify (1) and (2),

$20x-5y=130$ (3)

$x+9y=25$ (4)

Multiply (4) by 20,

$20x+180y=500$ (5)

$20x-5y=130$ (3)

Subtract, $185y=370$

$\therefore y=2$.

Substitute value of y in (3),

$20x-10=130$.

$\therefore x=7$.

18. $3x-0.25y=28$ (1)

$0.12x+0.7y=2.54$ (2)

Multiply (1) by 0.04,

$0.12x-0.01y=1.12$ (3)

$0.12x+0.7y=2.54$ (2)

Subtract, $-0.71y=-1.42$

$\therefore y=2$.

Substitute value of y in (1),

$3x-0.5=28$.

$\therefore x=9.5$.

19. $7(x-1)=3(y+8)$ (1)

$\frac{4x+2}{9}=\frac{5y+9}{2}$ (2)

Simplify (1) and (2),

$7x-7=3y+24$,

$7x-3y=31$ (3)

$8x+4=45y+81$,

$8x-45y=77$ (4)

Multiply (3) by 8 and (4) by 7,

$56x-24y=248$

$56x-315y=539$

Subtract, $291y=-291$

$\therefore y=-1$.

Substitute value of y in (3),

$7x+3=31$.

$\therefore x=4$.

20. $7x+\frac{1}{2}(2y+4)=16$ (1)

$3y-\frac{1}{4}(x+2)=8$ (2)

Simplify (1),

$35x+2y+4=80.$

Transpose and combine,

$35x+2y=76$ (3)

Simplify (2),

$12y-x-2=32.$

Transpose and combine,

$12y-x=34$ (4)

Multiply (4) by 35,

$-35x+420y=1190$

$35x+2y=76$ (3)

$422y=1266$

$\therefore y=3.$

Substitute value of y in (3),

$35x+6=76,$

$35x=70.$

$\therefore x=2.$

21. $\frac{5x-6y}{13}+3x=4y-2$ (1)

$\frac{5x+6y}{6}-\frac{3x-2y}{4}=2y-2$ (2)

Simplify (1),

$5x-6y+39x=52y-26.$

Transpose and combine,

$44x-58y=-26$ (3)

Simplify (2),

$10x+12y-9x+6y=24y-24.$

Transpose and combine,

$x-6y=-24$ (4)

Multiply (4) by 44,

$44x-264y=-1056$

$44x-58y=-26$ (3)

$206y=1030$

$\therefore y=5.$

Substitute value of y in (4),

$x-30=-24.$

$\therefore x=6.$

22.

$$\frac{5x-3}{2}-\frac{3x-19}{2}=4-\frac{3y-x}{3} \quad (1)$$

$$\frac{2x+y}{2}-\frac{9x-7}{8}=\frac{3(y+3)}{4}-\frac{4x+5y}{16} \quad (2)$$

Simplify (1), $15x-9-9x+57=24-6y+2x.$

Simplify (2), $16x+8y-18x+14=12y+36-4x-5y.$

Transpose and combine (1), $4x+6y=-24$ (3)

Transpose and combine (2), $2x+y=22$ (4)

Divide (1) by 2, $2x+3y=-12$

$2y=-34$

$\therefore y=-17.$

Substitute value of y in (4), $2x-17=22,$

$2x=39.$

$\therefore x=19\frac{1}{2}.$

23.

$$3y+11=\frac{4x^2-y(x+3y)}{x-y+4}+31-4x \quad (1)$$

$$(x+7)(y-2)+3=2xy-(y-1)(x+1) \quad (2)$$

Simplify (1), $3xy-3y^2+12y+11x-11y+44$
$=4x^2-xy-3y^2+31x-31y+124-4x^2+4xy-16x$ (3)

Transpose and combine, $32y-4x=80$ (4)

Divide by 4, $8y-x=20$ (5)

Simplify (2), $xy+7y-2x-14+3=2xy-xy-y+x+1$ (6)

Transpose and combine, $8y-3x=12$

Subtract (5), $8y-x=20$

$-2x=-8$

$\therefore x=4.$

Substitute value of x in (5), $8y-4=20,$

$8y=24.$

$\therefore y=3.$

24.

$$\frac{6x+9}{4}+\frac{3x+5y}{4x-6}=3\tfrac{1}{2}+\frac{3x+4}{2} \quad (1)$$

$$\frac{8y+7}{10}+\frac{6x-3y}{2y-8}=4+\frac{4y-9}{5} \quad (2)$$

Multiply (1) by 4, $6x+9+\frac{6x+10y}{2x-3}=13+6x+8.$

Transpose and combine, $\frac{6x+10y}{2x-3}=12.$

Divide both sides by (2), $\frac{3x+5y}{2x-3}=6.$

Multiply by $2x-3$, $3x+5y=12x-18.$

Transpose and combine, $-9x+5y=-18$ (3)

Multiply (2) by 10 $8y+7+\frac{30x-15y}{y-4}=40+8y-18.$

Transpose and combine, $\frac{30x-15y}{y-4}=15.$

Divide both sides by 15, $\frac{2x-y}{y-4}=1.$

Multiply by $y-4$, $2x-y=y-4.$

Transpose and combine, $2x-2y=-4.$

Divide by 2, $x-y=-2$ (4)

Multiply (3) by 1 and (4) by 9, $-9x+5y=-18$

$9x-9y=-18$

Add, $-4y=-36$

$\therefore y=9.$

Substitute value of y in (4), $x-9=-2.$

$\therefore x=7.$

25. $x - \frac{2y-x}{23-x} = 20 - \frac{59-2x}{2}$ (1)

$y + \frac{y-3}{x-18} = 30 - \frac{73-3y}{3}$ (2)

Multiply (1) by 2, $2x - \frac{4y-2x}{23-x} = 40 - 59 + 2x.$

Transpose and combine, $\frac{4y-2x}{23-x} = 19.$

Multiply by $23-x$, $4y - 2x = 437 - 19x.$

Transpose and combine, $4y + 17x = 437$ (3)

Multiply both sides of (2) by 3, $3y + \frac{3y-9}{x-18} = 90 - 73 + 3y.$

Transpose and combine, $\frac{3y-9}{x-18} = 17.$

Multiply by $x-18$, $3y - 9 = 17x - 306.$

Transpose and combine, $3y - 17x = -297$ (4)

Add (3), $4y + 17x = 437$

$7y = 140$

$\therefore y = 20.$

Substitute value of y in (3), $80 + 17x = 437,$

$17x = 357.$

$\therefore x = 21.$

Exercise 66.

1. $x + y = a$ (1)

$x - y = b$ (2)

Add, $2x = a + b$

$\therefore x = \frac{a+b}{2}.$

Subtract (2) from (1), $2y = a - b.$

$\therefore y = \frac{a-b}{2}.$

2. $ax + by = c$ (1)

$px + qy = r$ (2)

Multiply (1) by p and (2) by a,

$apx + bpy = cp$ (3)

$apx + aqy = ar$ (4)

Subt., $y(bp - aq) = cp - ar.$

$\therefore y = \frac{cp-ar}{bp-aq}.$

Multiply (1) by q and (2) by b,

$aqx + bqy = cq$

$bpx + bqy = br$

Subt., $(aq - bp)x = cq - br$

$\therefore x = \frac{cq-br}{aq-bp}.$

3. $mx + ny = a$ (1)

$px + qy = b$ (2)

Multiply (1) by p and (2) by m,

$mpx + npy = ap$ (3)

$mpx + mqy = mb$ (4)

Sub., $(np - mq)y = ap - mb$

$\therefore y = \dfrac{ap - mb}{np - mq}$.

Multiply (1) by q and (2) by n,

$mqx + nqy = aq$

$npx + nqy = nb$

Sub., $(mq - np)x = aq - nb$

$\therefore x = \dfrac{aq - nb}{mq - np}$.

4. $ax + by = e$ (1)

$ax + cy = d$ (2)

Subt., $(b - c)y = e - d$

$\therefore y = \dfrac{e - d}{b - c}$.

Multiply (1) by c and (2) by b,

$acx + bcy = ce$

$abx + bcy = bd$

Subt., $(ac - ab)x = ce - bd$

$\therefore x = \dfrac{ce - bd}{a(c - b)}$.

5. $mx - ny = r$ (1)

$m'x + n'y = r'$ (2)

Multiply (1) by m', $mm'x - m'ny = m'r$ (3)

Multiply (2) by m, $mm'x + mn'y = mr'$ (4)

Subtract, $(m'n + mn')y = mr' - m'r$

$\therefore y = \dfrac{mr' - m'r}{m'n + mn'}$.

Multiply (1) by n', $mn'x - nn'y = n'r$

Multiply (2) by n, $m'nx + nn'y = nr'$

Add, $(mn' + m'n)x = n'r + nr'$

$\therefore x = \dfrac{n'r + nr'}{mn' + m'n}$.

6. $ax + by = c$ (1)

$dx + fy = c^2$ (2)

Multiply (1) by d, $adx + bdy = cd$

Multiply (2) by a, $adx + afy = ac^2$

Subtract, $bdy - afy = cd - ac^2$

$\therefore y = \dfrac{c(d - ac)}{bd - af}$.

Multiply (1) by f, $afx + bfy = cf$

Multiply (2) by b, $bdx + bfy = bc^2$

Subtract, $(af - bd)x = cf - bc^2$

$\therefore x = \dfrac{c(f - bc)}{af - bd}$.

7. $$\frac{x}{a}+\frac{y}{b}=c \quad (1)$$
$$\frac{x}{b}\div\frac{y}{a}=-c \quad (2)$$
Simplify (1), $bx+ay=abc$ (3)
Simplify (2), $ax+bcy=0$ (4)
Multiply (3) by a and (4) by b,
$$abx+a^2y=a^2bc$$
$$abx+b^2cy=0$$
Subt., $a^2y-b^2cy=a^2bc$
$(a^2-b^2c)y=a^2bc,$
$$\therefore y=\frac{a^2bc}{a^2-b^2c}$$
Multiply (3) by bc and (4) by a,
$$b^2cx+abcy=ab^2c^2$$
$$a^2x+abcy=0$$
Subt., $b^2cx-a^2x=ab^2c^2$
$(b^2c-a^2)x=ab^2c^2.$
$$\therefore x=\frac{ab^2c^2}{b^2c-a^2}.$$

8. $$abx+cdy=2 \quad (1)$$
$$ax-cy=\frac{d-b}{bd} \quad (2)$$
Simplify (2),
$abdx-bcdy=d-b$ (3)
Multiply (1) by b,
$ab^2x+bcdy=2b$ (4)
(3) is $abdx-bcdy=d-b$ (5)
Add, $(ab^2+abd)x=b+d$
$$\therefore x=\frac{b+d}{ab(b+d)},$$
$$\text{or, } x=\frac{1}{ab}.$$
Multiply (1) by d,
$abdx+cd^2y=2d$
(3) is $abdx-bcdy=d-b$
Add, $(cd^2+bcd)y=b+d$
$$\therefore y=\frac{b+d}{cd(b+d)},$$
$$\text{or, } y=\frac{1}{cd}.$$

9. $$\frac{a}{b+y}=\frac{b}{3a+x} \quad (1)$$
$$ax+2by=d \quad (2)$$
Simplify (1),
$3a^2+ax=b^2+by.$
Transpose and combine,
$$ax-by=b^2-3a^2 \quad (3)$$
(2) is $ax+2by=d$
Subt., $-3by=b^2-3a^2-d$
$$\therefore y=\frac{3a^2-b^2+d}{3b}.$$
Multiply (3) by 2,
$2ax-2by=2b^2-6a^2$
(2) is $ax+2by=d$
Add, $3ax=2b^2-6a^2+d$
$$\therefore x=\frac{2b^2-6a^2+d}{3a}.$$

10. $$\frac{x}{a+b}-\frac{y}{a-b}=\frac{1}{a+b} \quad (1)$$
$$\frac{x}{a+b}+\frac{y}{a-b}=\frac{1}{a-b} \quad (2)$$
Add (1) and (2),
$$\frac{2x}{a+b}=\frac{1}{a+b}+\frac{1}{a-b}.$$
Simplify,
$2x(a-b)=2a,$
$x(a-b)=a.$
$$\therefore x=\frac{a}{a-b}.$$
Subtract (1) from (2),
$$\frac{2y}{a-b}=\frac{1}{a-b}-\frac{1}{a+b}.$$
Simplify,
$2y(a+b)=2b,$
$y(a+b)=b.$
$$\therefore y=\frac{b}{a+b}.$$

11.

$$a(a-x) = b(x+y-a) \quad (1)$$

$$a(y-b-x) = b(y-b) \quad (2)$$

Simplify (1), $a^2 - ax = bx + by - ab.$ (3)

Simplify (2), $ay - ab - ax = by - b^2.$ (4)

Transpose a^2 and bx in (3), $ax + bx = a^2 + ab - by$ (5)

Transpose $ay - ab$ in (4), $ax - ay = ab - by + b^2.$ (6)

Divide (5) by $(a+b)$ and (6) by a, $x = \frac{a^2 + ab - by}{a+b},$

$$x = \frac{ay - ab - by + b^2}{a}.$$

Equate values of x, $\frac{a^2 + ab - by}{a+b} = \frac{ay - ab - by + b^2}{a}.$

Simplify, $a^3 + a^2b - aby = a^2y - a^2b - b^2y + b^3,$

$$a^2y + aby - b^2y = a^3 + 2a^2b - b^3.$$

$$\therefore y = a + b.$$

Substitute value of y in (5), $ax + bx = a^2 + ab - ab - b^2.$

$$\therefore x = a - b.$$

12.

$$\frac{x-y+1}{x-y-1} = a \quad (1)$$

$$\frac{x+y+1}{x+y-1} = b \quad (2)$$

Simplify (1), $x - y + 1 = ax - ay - a.$

Simplify (2), $x + y + 1 = bx + by - b.$

Trans. and combine, $(a-1)x - (a-1)y = a + 1$ (3)

$$(b-1)x + (b-1)y = b + 1 \quad (4)$$

Multiply (3) by $b-1$ and (4) by $(a-1)$,

$$(a-1)(b-1)x - (a-1)(b-1)y = (a+1)(b-1) \quad (5)$$

$$(a-1)(b-1)x + (a-1)(b-1)y = (a-1)(b+1) \quad (6)$$

Add, $2(a-1)(b-1)x = 2(ab-1)$

$$\therefore x = \frac{ab-1}{(a-1)(b-1)}$$

Subtract (5) from (6), $2(a-1)(b-1)y = 2(a-b).$

$$\therefore y = \frac{a-b}{(a-1)(b-1)}$$

13. $ax = by + \frac{a^2 + b^2}{2}$ (1)

$(a - b)x = (a + b)y$ (2)

Simplify (1), $2ax - 2by = a^2 + b^2$ (3)

Simplify (2), $ax - bx - ay - by = 0$ (4)

In (3), $x = \frac{a^2 + b^2 + 2by}{2a}$.

In (4), $x = \frac{ay + by}{a - b}$.

Equate values of x, $\frac{a^2 + b^2 + 2by}{2a} = \frac{ay + by}{a - b}$.

Simplify,

$$a^3 + ab^2 + 2aby - a^2b - b^3 - 2b^2y = 2a^2y + 2aby.$$

Transpose and combine, $2a^2y + 2b^2y = a^3 - a^2b + ab^2 - b^3$,

$$\therefore y = \frac{a - b}{2}.$$

Substitute value of y in (1), $ax = \frac{ab - b^2}{2} + \frac{a^2 + b^2}{2}$,

$$ax = \frac{a^2 + ab}{2}.$$

$$\therefore x = \frac{a + b}{2}.$$

14.

$ax + by = c^2$ (1)

$\frac{a}{b + y} - \frac{b}{a + x} = 0$ (2)

Simplify (2), $ax - by = -a^2 + b^2$ (3)

Add (1) and (3),

$$\begin{array}{r} ax + by = c^2 \\ ax - by = -a^2 + b^2 \\ \hline 2ax = c^2 - a^2 + b^2 \end{array}$$

$$\therefore x = \frac{c^2 - a^2 + b^2}{2a}.$$

Subtract (3) from (1),

$$\begin{array}{r} ax + by = c^2 \\ ax - by = -a^2 + b^2 \\ \hline 2by = c^2 + a^2 - b^2 \end{array}$$

$$\therefore y = \frac{c^2 + a^2 - b^2}{2b}.$$

15.

$$\frac{x}{a+b} + \frac{y}{a-b} = 2a \tag{1}$$

$$\frac{x-y}{2ab} = \frac{x+y}{a^2+b^2} \tag{2}$$

Clear (1) of fractions, $ax - bx + ay + by = 2a^3 - 2ab^2$ (3)

Clear (2) of fractions, $a^2x + b^2x - a^2y - b^2y = 2abx + 2aby$ (4)

In (3), $$y = \frac{2a^3 - 2ab^2 - ax + bx}{a+b}.$$

In (4), $$y = \frac{a^2x - 2abx + b^2x}{a^2 + 2ab + b^2}.$$

Hence, $$\frac{2a^3 - 2ab^2 - ax + bx}{a+b} = \frac{a^2x - 2abx + b^2x}{a^2 + 2ab + b^2},$$

$$2a^4 - 2a^2b^2 - a^2x + 2a^3b - 2ab^3 + b^2x = a^2x - 2abx + b^2x.$$

Transpose and combine, $2a^2x - 2abx = 2a^4 - 2a^2b^2 + 2a^3b - 2ab^3.$

Divide by $2a$, $ax - bx = a^3 - ab^2 + a^2b - b^3$

$$\therefore x = \frac{a^3 - ab^2 + a^2b - b^3}{a-b}$$

$$\text{or, } x = a^2 + 2ab + b^2.$$

Substitute value of x in (3),

$a^3 + 2a^2b + ab^2 - a^2b - 2ab^2 - b^3 + ay + by = 2a^3 - 2ab^2.$

Transpose and combine, $ay + by = a^3 - a^2b - ab^2 + b^3.$

$$\therefore y = \frac{a^3 - a^2b - ab^2 + b^3}{a+b},$$

$$\text{or, } y = a^2 - 2ab + b^2.$$

16.

$$bx - bc = ay - ac \tag{1}$$

$$x - y = a - b \tag{2}$$

Transpose (1), $bx - ay = (b-a)c$

Multiply (2) by a, $ax - ay = (a-b)a$ (3)

Subtract, $(b-a)x = c(b-a) + a(b-a)$

$$\therefore x = c + a.$$

$bx - ay = (b-a)c$ (1)

Multiply (2) by b, $bx - by = (a-b)b$ (4)

Subtract, $(b-a)y = c(b-a) + b(b-a)$

$$\therefore y = c + b.$$

17.

$$\frac{x-a}{y-b}=c \tag{1}$$

$$a(x-a)+b(y-b)+abc=0 \tag{2}$$

Simplify (1), $x-cy=a-bc$ (3)

(2) is $ax+by=a^2+b^2-abc$ (4)

Multiply (3) by a, $ax-acy=a^2-abc$

Subtract, $by+acy=b^2$

$$\therefore y=\frac{b^2}{b+ac}.$$

Multiply (3) by b and (4) by c, $bx-bcy=ab-cb^2$

$acx+bcy=a^2c+b^2c-abc^2$

Add, $bx+acx=ab+a^2c-abc^2$

$$\therefore x=a-\frac{abc^2}{ac+b}$$

18.

$$(a+b)x-(a-b)y=4ab \tag{1}$$

$$(a-b)x+(a+b)y=2a^2-2b^2 \tag{2}$$

Multiply (1) by $(a-b)$,

$$(a^2-b^2)x-(a-b)^2y=4a^2b-4ab^2 \tag{3}$$

Multiply (2) by $(a+b)$,

$$(a^2-b^2)x+(a+b)^2y=2a^3-2ab^2+2a^2b-2b^3 \tag{4}$$

Subtract (3) from (4), $(2a^2+2b^2)y=2a^3-2a^2b+2ab^2-2b^3$.

$$\therefore y=a-b.$$

Multiply (1) by $(a+b)$ and (2) by $(a-b)$,

$(a+b)^2x-(a^2-b^2)y=4a^2b+4ab^2$

$(a-b)^2x+(a^2-b^2)y=2a^3-2a^2b-2ab^2+2b^3$

Add, $(2a^2+2b^2)x=2a^3+2a^2b+2ab^2+2b^3$

$$\therefore x=a+b.$$

19.

$$(x+a)(y+b)-(x-a)(y-b)=2(a-b)^2 \tag{1}$$

Simplify (1) and (2), $x-y+2(a-b)=0$ (2)

$$xy+bx+ay+ab-xy+ay+bx-ab=2(a-b)^2 \tag{3}$$

$$x-y+2a-2b=0 \tag{4}$$

Transpose and combine, $2ay+2bx=2a^2-4ab+2b^2$ (5)

$$x-y=2b-2a \tag{6}$$

Divide (5) by 2, $ay+bx=a^2-2ab+b^2$

Multiply (6) by a, $-ay+ax=2ab-2a^2$

Add, $(b+a)x=b^2-a^2$

$$\therefore x=b-a.$$

Substitute value of x in (6), $b-a-y=2b-2a.$

$$\therefore y=a-b.$$

20.

$$(a+b)(x+y)-(a-b)(x-y)=a^2 \quad (1)$$
$$(a-b)(x+y)+(a+b)(x-y)=b^2 \quad (2)$$

Simplify (1), $2bx+2ay=a^2$ (3)

Simplify (2), $2ax-2by=b^2$ (4)

Multiply (3) by a, $2abx+2a^2y=a^3$

Multiply (4) by b, $2abx-2b^2y=b^3$

Subtract, $(2a^2+2b^2)y=a^3-b^3$

$$\therefore y=\frac{a^3-b^3}{2(a^2+b^2)}.$$

Multiply (3) by b, $2b^2x+2aby=a^2b$

Multiply (4) by $-a$, $-2a^2x+2aby=-ab^2$

Subtract, $(2a^2+2b^2)x=a^2b+ab^2$

$$\therefore x=\frac{ab(a+b)}{2(a^2+b^2)}.$$

Exercise 67.

1.

$$\frac{1}{x}+\frac{2}{y}=10 \quad (1)$$
$$\frac{4}{x}+\frac{3}{y}=20 \quad (2)$$

Multiply (1) by 4, $\frac{4}{x}+\frac{8}{y}=40$ (3)

(2) is $\frac{4}{x}+\frac{3}{y}=20$

Subtract, $\frac{5}{y}=20$

$\therefore y=\frac{1}{4}$.

Multiply (1) by 3, $\frac{3}{x}+\frac{6}{y}=30$ (4)

(2) by 2, $\frac{8}{x}+\frac{6}{y}=40$ (5)

Subtract, $-\frac{5}{x}=-10$

or, $10x=5$.

$\therefore x=\frac{1}{2}$.

2.

$$\frac{1}{x}+\frac{2}{y}=a \quad (1)$$
$$\frac{3}{x}+\frac{4}{y}=b \quad (2)$$

Multiply (1) by 3, $\frac{3}{x}+\frac{6}{y}=3a$ (3)

(2) is $\frac{3}{x}+\frac{4}{y}=b$

Subtract, $\frac{2}{y}=3a-b$

$$\therefore y=\frac{2}{3a-b}.$$

Multiply (1) by 2, $\frac{2}{x}+\frac{4}{y}=2a$

(2) is $\frac{3}{x}+\frac{4}{y}=b$

Subtract, $\frac{1}{x}=b-2a$.

$$\therefore x=\frac{1}{b-2a}.$$

20. $7x + \frac{1}{5}(2y + 4) = 16$ (1)

$3y - \frac{1}{4}(x + 2) = 8$ (2)

Simplify (1),

$35x + 2y + 4 = 80.$

Transpose and combine,

$35x + 2y = 76$ (3)

Simplify (2),

$12y - x - 2 = 32.$

Transpose and combine,

$12y - x = 34$ (4)

Multiply (4) by 35,

$-35x + 420y = 1190$

$35x + 2y = 76$ (3)

$422y = 1266$

$\therefore y = 3.$

Substitute value of y in (3),

$35x + 6 = 76,$

$35x = 70.$

$\therefore x = 2.$

21. $\frac{5x - 6y}{13} + 3x = 4y - 2$ (1)

$\frac{5x + 6y}{6} - \frac{3x - 2y}{4} = 2y - 2$ (2)

Simplify (1),

$5x - 6y + 39x = 52y - 26.$

Transpose and combine,

$44x - 58y = -26$ (3)

Simplify (2),

$10x + 12y - 9x + 6y = 24y - 24.$

Transpose and combine,

$x - 6y = -24$ (4)

Multiply (4) by 44,

$44x - 264y = -1056$

$44x - 58y = -26$ (3)

$206y = 1030$

$\therefore y = 5.$

Substitute value of y in (4),

$x - 30 = -24.$

$\therefore x = 6.$

22.

$$\frac{5x - 3}{2} - \frac{3x - 19}{2} = 4 - \frac{3y - x}{3} \quad (1)$$

$$\frac{2x + y}{2} - \frac{9x - 7}{8} = \frac{3(y + 3)}{4} - \frac{4x + 5y}{16} \quad (2)$$

Simplify (1), $15x - 9 - 9x + 57 = 24 - 6y + 2x.$

Simplify (2), $16x + 8y - 18x + 14 = 12y + 36 - 4x - 5y.$

Transpose and combine (1), $4x + 6y = -24$ (3)

Transpose and combine (2), $2x + y = 22$ (4)

Divide (1) by 2, $2x + 3y = -12$

$2y = -34$

$\therefore y = -17.$

Substitute value of y in (4), $2x - 17 = 22,$

$2x = 39.$

$\therefore x = 19\frac{1}{2}.$

23.

$$3y+11=\frac{4x^2-y(x+3y)}{x-y+4}+31-4x \quad (1)$$

$$(x+7)(y-2)+3=2xy-(y-1)(x+1) \quad (2)$$

Simplify (1), $3xy-3y^2+12y+11x-11y+44$
$=4x^2-xy-3y^2+31x-31y+124-4x^2+4xy-16x$ (3)

Transpose and combine, $32y-4x=80$ (4)

Divide by 4, $8y-x=20$ (5)

Simplify (2), $xy+7y-2x-14+3=2xy-xy-y+x+1$ (6)

Transpose and combine, $8y-3x=12$

Subtract (5), $8y-x=20$

$-2x=-8$

$\therefore x=4.$

Substitute value of x in (5), $8y-4=20,$

$8y=24.$

$\therefore y=3.$

24.

$$\frac{6x+9}{4}+\frac{3x+5y}{4x-6}=3\tfrac{1}{4}+\frac{3x+4}{2} \quad (1)$$

$$\frac{8y+7}{10}+\frac{6x-3y}{2y-8}=4+\frac{4y-9}{5} \quad (2)$$

Multiply (1) by 4, $6x+9+\frac{6x+10y}{2x-3}=13+6x+8.$

Transpose and combine, $\frac{6x+10y}{2x-3}=12.$

Divide both sides by (2), $\frac{3x+5y}{2x-3}=6.$

Multiply by $2x-3$, $3x+5y=12x-18.$

Transpose and combine, $-9x+5y=-18$ (3)

Multiply (2) by 10 $8y+7+\frac{30x-15y}{y-4}=40+8y-18.$

Transpose and combine, $\frac{30x-15y}{y-4}=15.$

Divide both sides by 15, $\frac{2x-y}{y-4}=1.$

Multiply by $y-4$, $2x-y=y-4.$

Transpose and combine, $2x-2y=-4.$

Divide by 2, $x-y=-2$ (4)

Multiply (3) by 1 and (4) by 9, $-9x+5y=-18$

$9x-9y=-18$

Add, $-4y=-36$

$\therefore y=9.$

Substitute value of y in (4), $x-9=-2.$

$\therefore x=7.$

Exercise 69.

1. The sum of two numbers divided by 2 gives as a quotient 24, and the difference between them divided by 2 gives as a quotient 17. What are the numbers?

Let x = first number,
and y = second number.

Then $$\frac{x+y}{2} = 24 \qquad (1)$$

and $$\frac{x-y}{2} = 17 \qquad (2)$$

Add (1) and (2), $x = 41$
Subtract (2) from (1), $y = 7$.

2. The number 144 is divided into three numbers. When the first is divided by the second, the quotient is 3 and the remainder 2; and when the third is divided by the sum of the other two numbers, the quotient is 2 and the remainder 6. Find the numbers.

Let x = first number,
y = second number,
and z = third number.

Then $$x + y + z = 144 \qquad (1)$$

$$\frac{x-2}{y} = 3 \qquad (2)$$

and $$\frac{z-6}{x+y} = 2 \qquad (3)$$

Simplify (2), $x - 3y = 2$ (4)

Simplify (3), $z - 2y - 2x = 6$ (5)

Multiply (1) by 2, $2x + 2y + 2z = 288$ (6)

Add (5) and (6), $3z = 294$

$\therefore z = 98.$

Substitute value of z in (1), $x + y + 98 = 144,$

$$x + y = 46 \qquad (7)$$

(4) is $x - 3y = 2$

Subtract, $4y = 44$

$\therefore y = 11.$

Substitute value of y in (7), $x + 11 = 46.$

$\therefore x = 35.$

3. Three times the greater of two numbers exceeds twice the less by 10; and twice the greater together with three times the less is 24. Find the numbers.

Let x = greater number,
and y = less number.

Then $3x - 2y = 10$ (1)

and $2x + 3y = 24$ (2)

Multiply (1) by 2, $6x - 4y = 20$

Multiply (2) by 3, $6x + 9y = 72$

Subtract, $-13y = -52$

$\therefore y = 4.$

Substitute value of y in (1), $3x - 8 = 10.$

$\therefore x = 6.$

4. If the smaller of two numbers be divided by the greater, the quotient is 0.21 and the remainder 0.0057; but if the greater be divided by the smaller, the quotient is 4 and the remainder 0.742. What are the numbers?

Let x = larger number,
and y = smaller number.

Then $\frac{y}{x}$ = smaller divided by larger,

$\frac{x}{y}$ = larger divided by smaller.

Hence, $\frac{y}{x} = 0.21 + \frac{0.0057}{x}$ (1)

and $\frac{x}{y} = 4 + \frac{0.742}{y}$ (2)

Simplify (1), $y = 0.21x + 0.0057$

$y - 0.21x = 0.0057$ (3)

Simplify (2), $x = 4y + 0.742$

$x - 4y = 0.742$ (4)

Multiply (3) by 4, $4y - 0.84x = 0.0228$

(4) is $-4y + x = 0.742$

Add, $0.16x = 0.7648$

$\therefore x = 4.78.$

Substitute value of x in (4),

$-4y = -4.038$

$\therefore y = 1.0095.$

7.

$$x - y - z = 5 \quad (1)$$
$$x + y - z = 25 \quad (2)$$
$$x + y + z = 35 \quad (3)$$

(1) is $x - y - z = 5$

(3) is $x + y + z = 35$

Add, $2x = 40$

$\therefore x = 20.$

Substitute value of x in (2) and (3),

$y - z = 5$

$y + z = 15$

Add, $2y = 20$

$\therefore y = 10.$

Subtract, $-2z = -10.$

$\therefore z = 5.$

8.

$$x + y + z = 30 \quad (1)$$
$$8x + 4y + 2z = 50 \quad (2)$$
$$27x + 9y + 3z = 64 \quad (3)$$

Multiply (1) by 2,

$2x + 2y + 2z = 60 \quad (4)$

(2) is $8x + 4y + 2z = 50$

Sub., $-6x - 2y = -10 \quad (5)$

Multiply (1) by 3,

$3x + 3y + 3z = 90 \quad (6)$

(3) is $27x + 9y + 3z = 64$

Sub., $-24x - 6y = -26 \quad (7)$

Multiply (5) by 3,

$-18x - 6y = 30 \quad (8)$

(7) is $-24x - 6y = -26$

Subtract, $6x = 4$

$\therefore x = \frac{2}{3}.$

Substitute value of x in (8),

$-12 - 6y = 30.$

$\therefore y = -7.$

Substitute values of x and y in (1), $\frac{2}{3} - 7 + z = 30.$

$\therefore z = 36\frac{1}{3}.$

9.

$$15y = 24z - 10x + 41 \quad (1)$$
$$15x = 12y - 16z + 10 \quad (2)$$
$$18x - (7z - 13) = 14y \quad (3)$$

Multiply (1) by 2, $20x + 30y - 48z = 82 \quad (4)$

Multiply (2) by 3, $45x - 36y + 48z = 30 \quad (5)$

Add, $65x - 6y = 112 \quad (6)$

Multiply (2) by 7, $105x - 84y + 112z = 70 \quad (7)$

Multiply (3) by 16, $288x - 224y - 112z = -208 \quad (8)$

Add, $393x - 308y = -138 \quad (9)$

Multiply (6) by 154, $10{,}010x - 924y = 17{,}248$

Multiply (9) by 3, $1{,}179x - 924y = -414$

Subtract, $8{,}831x = 17{,}662$

$\therefore x = 2.$

Substitute value of x in (6), $130 - 6y = 112.$

$\therefore y = 3.$

Substitute values of x and y in (1),

$20 + 45 - 24z = 41.$

$\therefore z = 1.$

10.

$$\begin{aligned} 3x-y+z&=17 \quad (1)\\ 5x+3y-2z&=10 \quad (2)\\ 7x+4y-5z&=3 \quad (3)\end{aligned}$$

Multiply (1) by 2,

$$6x-2y+2z=34 \quad (4)$$

(2) is $5x+3y-2z=10$

Add, $11x+y=44$ (5)

Multiply (1) by 5,

$$15x-5y+5z=85 \quad (6)$$

(3) is $7x+4y-5z=3$

Add, $22x-y=88$ (7)

(5) is $11x+y=44$ (5)

Add, $33x=132$

$\therefore x=4.$

Substitute value of x in (5),

$44+y=44,$

$\therefore y=0.$

From (1), $z=5.$

11.

$$\begin{aligned} x+y+z&=5 \quad (1)\\ 3x-5y+7z&=75 \quad (2)\\ 9x-11z+10&=0 \quad (3)\end{aligned}$$

Multiply (1) by 5,

$$5x+5y+5z=25 \quad (4)$$

(2) is $3x-5y+7z=75$

Add, $8x+12z=100$ (5)

Multiply (5) by 9 and (3) by 8,

$$72x+108z=900$$

$72x-88z=-80$

Subtract, $196z=980$

$\therefore z=5.$

Substitute value of z in (3),

$9x-55=-10,$

$9x=45.$

$\therefore x=5.$

Substitute values of x and z in (1),

$5+y+5=5.$

$\therefore y=-5.$

12.

$$\begin{aligned} x+2y+3z&=6 \quad (1)\\ 2x+4y+2z&=8 \quad (2)\\ 3x+2y+8z&=101 \quad (3)\end{aligned}$$

Multiply (1) by 2,

$$2x+4y+6z=12 \quad (4)$$

(2) is $2x+4y+2z=8$ (5)

Subtract, $4z=4$

$\therefore z=1.$

(2) is $2x+4y+2z=8$

$2\times(3)$ is $6x+4y+16z=202$ (7)

Subt., $-4x-14z=-194$ (8)

Substitute value of z in (8),

$-4x-14=-194,$

$-4x=-180.$

$\therefore x=45.$

Substitute values of x and z in (1),

$45+2y+3=6,$

$2y=-42.$

$\therefore y=-21.$

13.

$$\begin{aligned} x-3y-2z&=1 \quad (1)\\ 2x-3y+5z&=-19 \quad (2)\\ 5x+2y-z&=12 \quad (3)\end{aligned}$$

Multiply (3) by 2,

$$10x+4y-2z=24 \quad (4)$$

(1) is $x-3y-2z=1$

Subt., $9x+7y=23$ (5)

Multiply (3) by 5,

$$25x+10y-5z=60 \quad (6)$$

(2) is $2x-3y+5z=-19$

Add, $27x+7y=41$ (7)

(5) is $9x+7y=23$

Sub., $18x=18$

$\therefore x=1.$

Substitute value of x in (5),

$9+7y=23.$

$\therefore y=2.$

Substitute values of x and y in (1),

$1-6-2z=1.$

$\therefore z=-3.$

14.
$$3x - 2y = 5 \quad (1)$$
$$4x - 3y + 2z = 11 \quad (2)$$
$$x - 2y - 5z = -7 \quad (3)$$

Multiply (2) by 5 and (3) by 2,

$$20x - 15y + 10z = 55 \quad (4)$$
$$2x - 4y - 10z = -14 \quad (5)$$

Add, $22x - 19y = 41$ (6)

Multiply (1) by 19 and (6) by 2,

$$57x - 38y = 95 \quad (7)$$
$$44x - 38y = 82 \quad (8)$$

Subtract, $13x = 13$

$$\therefore x = 1.$$

Substitute value of x in (1),

$$3 - 2y = 5,$$
$$-2y = 2.$$
$$\therefore y = -1.$$

Substitute values of x and y in (2),

$$4 + 3 + 2z = 11,$$
$$2z = 4.$$
$$\therefore z = 2.$$

15.
$$x + y = 1 \quad (1)$$
$$y + z = 9 \quad (2)$$
$$x + z = 5 \quad (3)$$

Add, $2x + 2y + 2z = 15$

$$x + y + z = 7\tfrac{1}{2} \quad (4)$$

Subtract (1) from (4),

$$z = 6\tfrac{1}{2}.$$

Subtract (2) from (4),

$$x = -1\tfrac{1}{2}.$$

Subtract (3) from (4),

$$y = 2\tfrac{1}{2}.$$

16.
$$2x - 3y = 3 \quad (1)$$
$$3y - 4z = 7 \quad (2)$$
$$-5x + 4z = 2 \quad (3)$$

(1) is $2x - 3y = 3$
(2) is $3y - 4z = 7$

Add, $2x - 4z = 10$
(3) is $-5x + 4z = 2$

Add, $-3x = 12$

$$\therefore x = -4.$$

Substitute value of x in (1),

$$-8 - 3y = 3,$$
$$-3y = 11.$$
$$\therefore y = -3\tfrac{2}{3}.$$

Substitute value of x in (3),

$$20 + 4z = 2,$$
$$4z = -18.$$
$$\therefore z = -4\tfrac{1}{2}.$$

17.
$$3x - 4y + 6z = 1 \quad (1)$$
$$2x + 2y - z = 1 \quad (2)$$
$$7x - 6y + 7z = 2 \quad (3)$$

(1) is $3x - 4y + 6z = 1$
$6 \times (2)$ is $12x + 12y - 6z = 6$ (4)

Add, $15x + 8y = 7$ (5)

Multiply (2) by 7,

$$14x + 14y - 7z = 7 \quad (6)$$

(3) is $7x - 6y + 7z = 2$

Add, $21x + 8y = 9$ (7)

Subtract (7) from (5),

$$-6x = -2.$$
$$\therefore x = \tfrac{1}{3}.$$

Substitute value of x in (7),

$$7 + 8y = 9,$$
$$8y = 2.$$
$$\therefore y = \tfrac{1}{4}.$$

Substitute values of x and y in (2),

$$\tfrac{2}{3} + \tfrac{1}{2} - z = 1,$$
$$-z = 1 - \tfrac{2}{3} - \tfrac{1}{2}.$$
$$\therefore z = \tfrac{1}{6}.$$

18.

$7x - 3y = 30$ (1)
$9y - 5z = 34$ (2)
$x + y + z = 33$ (3)

Multiply (3) by 7,

$7x + 7y + 7z = 231$
(1) is $7x - 3y \quad = 30$
Subtract, $10y + 7z = 201$ (5)

Multiply (2) by 10 and (5) by 9,

$90y - 50z = 340$ (6)
$90y + 63z = 1809$ (7)
Subtract, $-113z = -1469$
$\therefore z = 13.$

Substitute value of z in (5),

$10y + 91 = 201,$
$10y = 110.$
$\therefore y = 11.$

Substitute values of y and z in (3),

$x + 11 + 13 = 33.$
$\therefore x = 9.$

19.

$$x + \frac{y}{2} + \frac{z}{3} = 6,$$

$$y + \frac{z}{2} + \frac{x}{3} = -1,$$

$$z + \frac{x}{2} + \frac{y}{3} = 17.$$

Simplify,

$6x + 3y + 2z = 36$ (1)
$2x + 6y + 3z = -6$ (2)
$3x + 2y + 6z = 102$ (3)

$3\times(1)$ is $18x+9y+6z = 108$
(3) is $3x+2y+6z = 102$
Sub., $15x+7y \quad = 6$ (4)
$2\times(2)$ is $4x+12y+6z = -12$
(3) is $3x+2y+6z = 102$
Sub., $x+10y \quad = -114$ (5)

Subtract $7\times(5)$ from $10\times(4)$,

$143x = 858$
$\therefore x = 6.$

Substitute value of x in (5),

$y = -12.$

Substitute values of x and y in (1),

$z = 18.$

20.

$$\frac{1}{x} + \frac{2}{y} = 5 \quad (1)$$

$$\frac{3}{y} - \frac{4}{z} = -6 \quad (2)$$

$$\frac{3}{z} - \frac{4}{x} = 5 \quad (3)$$

Multiply (1) by 3 and (2) by 2,

$$\frac{3}{x} + \frac{6}{y} = 15 \quad (4)$$

$$-\frac{8}{z} + \frac{6}{y} = -12 \quad (5)$$

Subtract, $$\frac{3}{x} + \frac{8}{z} = 27 \quad (6)$$

Multiply (6) by 4 and (3) by 3,

$$\frac{12}{x} + \frac{32}{z} = 108$$

$$-\frac{12}{x} + \frac{9}{z} = 15$$

Add $$\frac{41}{z} = 123$$

$\therefore z = \frac{1}{3}.$

Substitute value of z in (3),

$$9 - \frac{4}{x} = 5.$$

$\therefore x = 1.$

Substitute value of x in (1),

$$1 + \frac{2}{y} = 5.$$

$\therefore y = \frac{1}{2}.$

21.

$$\frac{1}{x}+\frac{1}{y}-\frac{1}{z}=a \quad (1)$$

$$\frac{1}{x}-\frac{1}{y}+\frac{1}{z}=b \quad (2)$$

$$\frac{1}{y}+\frac{1}{z}-\frac{1}{x}=c \quad (3)$$

Add, $\frac{1}{x}+\frac{1}{y}+\frac{1}{z}=a+b+c$ (4)

(1) is $\frac{1}{x}+\frac{1}{y}-\frac{1}{z}=a$

Subtract, $\frac{2}{z}=b+c$

$$\therefore z=\frac{2}{b+c}.$$

(4) is $\frac{1}{x}+\frac{1}{y}+\frac{1}{z}=a+b+c$

(2) is $\frac{1}{x}-\frac{1}{y}+\frac{1}{z}=b$

Subtract, $\frac{2}{y}=a+c$

$$\therefore y=\frac{2}{a+c}.$$

(4) is $\frac{1}{x}+\frac{1}{y}+\frac{1}{z}=a+b+c$

(3) is $-\frac{1}{x}+\frac{1}{y}+\frac{1}{z}=c$

Subt., $\frac{2}{x}=a+b$

$$\therefore x=\frac{2}{a+b}.$$

22.

$$bz+cy=a \quad (1)$$

$$az+cx=b \quad (2)$$

$$ay+bx=c \quad (3)$$

Multiply (1) by a, $abz+acy=a^2$ (4)

Multiply (2) by b, $abz+bcx=b^2$ (5)

Multiply (3) by c $acy+bcx=c^2$ (6)

Add (4), (5), and (6), $2abz+2acy+2bcx=a^2+b^2+c^2$ (7)

Subtract twice (4) from (7), $2bcx=b^2+c^2-a^2$ (8)

Subtract twice (5) from (7), $2acy=a^2-b^2+c^2$ (9)

Subtract twice (6) from (7), $2abz=a^2+b^2-c^2$ (10)

In (8), $$x=\frac{b^2+c^2-a^2}{2bc}$$

In (9), $$y=\frac{a^2-b^2+c^2}{2ac}.$$

In (10), $$z=\frac{a^2+b^2-c^2}{2ab}$$

23. $\frac{3}{x}-\frac{4}{5y}+\frac{1}{z}=7\frac{3}{5}$ (1)

$\frac{1}{3x}+\frac{1}{2y}+\frac{2}{z}=10\frac{1}{6}$ (2)

$\frac{4}{5x}-\frac{1}{2y}+\frac{4}{z}=16\frac{1}{10}$ (3)

Multiply (1) by 60 and (2) by 30,

$\frac{180}{x}-\frac{48}{y}+\frac{60}{z}=456$ (4)

$\frac{10}{x}+\frac{15}{y}+\frac{60}{z}=305$ (5)

Sub., $\frac{170}{x}-\frac{63}{y}=151$ (6)

Multiply (2) by 60 and (3) by 30,

$\frac{20}{x}+\frac{30}{y}+\frac{120}{z}=610$ (7)

$\frac{24}{x}-\frac{15}{y}+\frac{120}{z}=483$ (8)

Sub., $-\frac{4}{x}+\frac{45}{y}=127$ (9)

Multiply (6) by 2 and (9) by 85,

$\frac{340}{x}-\frac{126}{y}=302$ (10)

$-\frac{340}{x}+\frac{3825}{y}=10795$ (11)

Add, $\frac{3699}{y}=11097$

$\therefore y=\frac{1}{3}$.

Substitute value of y in (9),

$-\frac{4}{x}+135=127,$

$8x=4.$

$\therefore x=\frac{1}{2}$.

Substitute values of x and y in (5),

$20+45+\frac{60}{z}=305,$

$240z=60.$

$\therefore z=\frac{1}{4}$.

24. $\frac{2}{x}-\frac{3}{y}+\frac{4}{z}=2.9$ (1)

$\frac{5}{x}-\frac{6}{y}-\frac{7}{z}=-10.4$ (2)

$\frac{9}{y}+\frac{10}{z}-\frac{8}{x}=14.9$ (3)

Add, $-\frac{1}{x}+\frac{7}{z}=7.4$ (4)

Multiply (1) by 2,

$\frac{4}{x}-\frac{6}{y}+\frac{8}{z}=5.8$ (5)

(2) is $\frac{5}{x}-\frac{6}{y}-\frac{7}{z}=-10.4$ (6)

Subt., $-\frac{1}{x}+\frac{15}{z}=16.2$ (7)

(4) is $-\frac{1}{x}+\frac{7}{z}=7.4$ (8)

Subtract, $\frac{8}{z}=8.8$

$\therefore z=\frac{10}{11}$.

Substitute value of z in (4),

$-\frac{1}{x}+7.7=7.4.$

Simplify, $-1+7.7x=7.4x,$

$3x=10.$

$\therefore x=3\frac{1}{3}$.

Substitute values of x and z in (1),

$0.6-\frac{3}{y}+4.4=2.9.$

Simplify,

$0.6y-3+4.4y=2.9y.$

$\therefore y=1\frac{2}{7}$.

25.

$$\frac{2}{x}+\frac{1}{y}-\frac{3}{z}=0 \quad (1)$$

$$\frac{3}{z}-\frac{2}{y}=2 \quad (2)$$

$$\frac{1}{x}+\frac{1}{z}=1\tfrac{1}{8} \quad (3)$$

Multiply (1) by 2,

$$\frac{4}{x}+\frac{2}{y}-\frac{6}{z}=0 \quad (4)$$

(2) is $-\frac{2}{y}+\frac{3}{z}=2$

Add, $\frac{4}{x}-\frac{3}{z}=2 \quad (5)$

(5) is $\frac{4}{x}-\frac{3}{z}=2$

Mul. (3) by 3, $\frac{3}{x}+\frac{3}{z}=4$

Add, $\frac{7}{x}=6$

$\therefore x=1\frac{1}{6}$.

Substitute value of x in (5),

$$\frac{24}{7}-\frac{3}{z}=2.$$

$\therefore z=2\frac{1}{10}$.

Substitute values of x and y in (1),

$$\frac{12}{7}+\frac{1}{y}-\frac{10}{7}=0.$$

$\therefore y=-3\frac{1}{2}$.

26.

$$ax+by+cz=a \quad (1)$$

$$ax-by-cz=b \quad (2)$$

$$ax+cy+bz=c \quad (3)$$

Add (1) and (2), $2ax=a+b \quad (4)$

$$\therefore x=\frac{a+b}{2a}.$$

Multiply (2) by b and (3) by c,

$$abx-b^2y-bcz=b^2 \quad (5)$$

$$acx+c^2y+bcz=c^2 \quad (6)$$

Add, $abx+acx-b^2y+c^2y=b^2+c^2 \quad (7)$

Substitute value of x in (7),

$$\frac{a^2b+a^2c+ab^2+abc}{2a}-(b^2-c^2)y=b^2+c^2.$$

$$\therefore y=\frac{ab+ac+bc-b^2-2c^2}{2(b^2-c^2)}.$$

Substitute values of x and y in (3),

$$\frac{a+b}{2}+\frac{abc+ac^2+bc^2-b^2c-2c^3}{2(b^2-c^2)}+bz=c,$$

$$bz=\frac{3b^2c-ab^2-abc-b^3}{2(b^2-c^2)}$$

$$\therefore z=\frac{3bc-ab-ac-b^2}{2(b^2-c^2)}.$$

27.

$$\frac{2x-y}{3}-\frac{3y+2z}{4}-\frac{x-y-z}{5}=4 \quad (1)$$

Simplify, $40x-20y=45y+30z=12x-12y-12z=240$

$$40x-20y=240 \quad (1)$$
$$45y+30z=240 \quad (2)$$
$$12x-12y-12z=240 \quad (3)$$

Divide (1) by 20, $2x-y=12$ (4)
Divide (2) by 15, $3y+2z=16$ (5)
Divide (3) by 12, $x-y-z=20$ (6)

Multiply (4) by 3, $6x-3y=36$ (7)
(5) is $3y+2z=16$

Add, $6x+2z=52$ (8)

(4) is $2x-y=12$
(6) is $x-y-z=20$

Subtract, $x+z=-8$ (9)

(8) + 2 is $3x+z=26$
(9) is $x+z=-8$

Subtract, $2x=34$

$\therefore x=17.$

Substitute value of x in (4), $y=22.$
Substitute value of y in (5), $z=-25.$

28.

$$\frac{x-y}{a}=\frac{x-a-b}{a+b+c} \quad (1)$$

$$\frac{y-z}{b}=\frac{x-a-b}{a+b+c} \quad (2)$$

$$\frac{x+z}{c}=\frac{x-a-b}{a+b+c} \quad (3)$$

$$x(a+b+c)-y(a+b+c)=ax-a^2-ab \quad (4)$$
$$-z(a+b+c)+y(a+b+c)=bx-b^2-ab \quad (5)$$
$$x(a+b+c)+z(a+b+c)=cx-ac-bc \quad (6)$$

Add, $2x(a+b+c)=x(a+b+c)-a^2-b^2-2ab-ac-bc$

$$x(a+b+c)=-(a^2+b^2+2ab+ac+bc).$$
$$\therefore x=-(a+b).$$

From (4), $-(a+b)(a+b+c)-y(a+b+c)=-2a^2-2ab,$
or, $-y(a+b+c)=-a^2+b^2+ac+bc.$

$$\therefore y=\frac{(a+b)(a-b-c)}{a+b+c}$$

From (6), $-(a+b)(a+b+c)+z(a+b+c)=-2ac-2bc,$
$z(a+b+c)=a^2+2ab+b^2-ac-bc.$

$$\therefore z=\frac{(a+b-c)(a+b)}{a+b+c}$$

21. If a certain number be divided by the sum of its two digits diminished by 2, the quotient is 5 and the remainder 1; if the digits be interchanged, and the resulting number be divided by the sum of the digits increased by 2, the quotient is 5 and the remainder 8. Find the number.

Let x = digit in tens' place,
and y = digit in units' place.
Then $10x + y$ = number.

By conditions, $$\frac{10x+y}{x+y-2} = 5 + \frac{1}{x+y-2},$$

and $$\frac{10y+x}{x+y+2} = 5 + \frac{8}{x+y+2}.$$

Clear of fractions, $$10x + y = 5x + 5y - 10 + 1.$$
$$10y + x = 5x + 5y + 10 + 8.$$

Transpose and combine, $$5x - 4y = -9 \quad (1)$$
$$5y - 4x = 18 \quad (2)$$

Multiply (1) by 5, $25x - 20y = -45$
Multiply (2) by 4, $-16x + 20y = 72$

Add, $9x = 27$
$\therefore x = 3.$

Substitute value of x in (1), $y = 6.$

$\therefore$ number = 36.

22. The first of the two digits of a number is, when doubled, 3 more than the second, and the number itself is less by 6 than five times the sum of the digits. What is the number?

Let x = digit in tens' place,
and y = digit in units' place.
Then $10x + y$ = number.

By conditions, $$2x = y + 3 \quad (1)$$
and $$10x + y + 6 = 5x + 5y \quad (2)$$

Transpose and combine, $$2x - y = 3 \quad (3)$$
$$5x - 4y = -6 \quad (4)$$

Multiply (3) by 4, $8x - 4y = 12$
(4) is $5x - 4y = -6$

Subtract, $3x = 18$
$\therefore x = 6.$

Substitute value of x in (3), $y = 9.$

$\therefore$ number = 69.

23. A number is expressed by three digits, of which the first and last are alike. By interchanging the digits in the units' and tens' places, the number is increased by 54; but if the digits in the tens' and hundreds' places are interchanged, 9 must be added to four times the resulting number to make it equal to the original number. What is the number?

Let x = digit in hundreds' and units' place,
and y = digit in tens' place.
Then $101x+10y$ = number.
By conditions, $110x+y=101x+10y+54$ (1)
$4(11x+100y)+9=101x+10y$ (2)
Transpose and combine (1), $9x-9y=54$ (3)
Divide (3) by 9, $x-y=6$ (4)
Transpose and combine (2),
$-57x+390y=-9$
Multiply (4) by 57, $57x-57y=342$
Add, $333y=333$
$\therefore y=1.$
Substitute value of y in (4), $x=7.$
$\therefore$ number = 717.

24. A number is expressed by three digits. The sum of the digits is 21; the sum of the first and second exceeds the third by 3; and if 198 be added to the number, the digits in the units' and hundreds' places will be interchanged. Find the number.

Let x = digit in hundreds' place,
y = digit in tens' place,
and z = digit in units' place.
Then $100x+10y+z$ = number.
By conditions, $x+y+z=21$ (1)
and $x+y-z=3$ (2)
$100x+10y+z+198=100z+10y+x$ (3)
Subtract (2) from (1), $2z=18.$
$\therefore z=9.$
Divide (3) by 99, $x-z=-2$ (4)
Substitute value of z in (3), $x-9=-2.$
$\therefore x=7.$
Substitute values of x and z in (2), $y=5.$
$\therefore$ number = 759.

25. A number is expressed by three digits. The sum of the digits is 9; the number is equal to forty-two times the sum of the first and second digits; and the third digit is twice the sum of the other two. Find the number.

Let x = digit in hundreds' place,
y = digit in tens' place,
and z = digit in units' place.

Then
$$x + y + z = 9 \quad (1)$$
$$100x + 10y + z = 42(x + y) \quad (2)$$
$$z = 2(x + y) \quad (3)$$

From (2), $58x - 32y + z = 0$
From (3), $-2x - 2y + z = 0$

Subtract, $60x - 30y = 0$
Divide by 30, $2x - y = 0$ (4)
Subtract (3) from (1), $3x + 3y = 9$

Divide by 3, $x + y = 3$ (5)
(4) is $2x - y = 0$

Add, $3x = 3$
$\therefore x = 1.$

Substitute value of x in (5), $y = 2.$
Substitute values of x and y in (1), $z = 6.$
$\therefore$ number = 126.

26. A certain number, expressed by three digits, is equal to forty-eight times the sum of its digits. If 198 be subtracted from the number, the digits in the units' and hundreds' places will be interchanged; and the sum of the extreme digits is equal to twice the middle digit. Find the number.

Let x = digit in hundreds' place,
y = digit in tens' place,
and z = digit in units' place.

Then
$$100x + 10y + z = 48(x + y + z) \quad (1)$$
$$100x + 10y + z - 198 = 100z + 10y + x \quad (2)$$
and
$$x + z = 2y \quad (3)$$
From (1), $52x - 38y - 47z = 0$ (4)
From (2), $99x - 99z = 198.$
Divide by 99, $x - z = 2$ (5)
From (3), $x - 2y + z = 0$ (6)
Subtract $19 \times$ (6) from (4), $33x - 66z = 0.$
Divide by 33, $x - 2z = 0$ (7)
Subtract (7) from (5), $z = 2.$
Substitute value of z in (5), $x = 4.$
Substitute values of x and z in (6), $y = 3.$
$\therefore$ number = 432.

27. A waterman rows 30 miles and back in 12 hours. He finds that he can row 5 miles with the stream in the same time as 3 against it. Find the time he was rowing up and down respectively.

Let x = number of hours he rowed down,
and y = number of hours he rowed up.

By conditions, $x + y = 12$ (1)
and $5x = 3y$ (2)

Transpose (2), $5x - 3y = 0$
Multiply (1) by 3, $3x + 3y = 36$

Add, $8x = 36$
$\therefore x = 4\frac{1}{2}$.

Substitute value of x in (1), $4\frac{1}{2} + y = 12$.
$\therefore y = 7\frac{1}{2}$.

28. A crew, which can pull at the rate of 12 miles an hour down the stream, finds that it takes twice as long to come up the river as to go down. At what rate does the stream flow?

Let x = rate of pulling,
and y = rate of stream.
$x + y$ = rate down stream,
$x - y$ = rate up stream.
Then $x + y = 12$ (1)
$x - y = 6$ (2)

Subtract, $2y = 6$
$\therefore y = 3$ = rate stream flows.

Substitute value of y in (1),
$x + 3 = 12$,
$x = 12 - 3$.
$\therefore x = 9$.

29. A man sculls down a stream, which runs at the rate of 4 miles an hour, for a certain distance in 1 hour and 40 minutes. In returning it takes him 4 hours and 15 minutes to arrive at a point 3 miles short of his starting-place. Find the distance he pulled down the stream and the rate of his pulling.

Let x = rate the man sculls,

and y = number of miles he goes.

Then $x+4$ = rate going down the stream,

and $x-4$ = rate going up the stream.

$(x+4)\frac{5}{3}$ = number of miles he goes.

$$\therefore (x+4)\tfrac{5}{3} = y \qquad (1)$$

and $$(x-4)1\tfrac{1}{4} = y-3 \qquad (2)$$

$4\times(1)$ is $$20x + 80 = 12y \qquad (3)$$

$3\times(2)$ is $$51x - 204 = 12y - 36 \qquad (4)$$

Subtract, $$-31x + 284 = 36$$

$$\therefore x = 8, \text{ rate of pulling.}$$

Substitute value of x in (1), $y = 20$.

30. A person rows down a stream a distance of 20 miles and back again in 10 hours. He finds he can row 2 miles against the stream in the same time he can row 3 miles with it. Find the time of his rowing down and of his rowing up the stream; and also the rate of the stream.

Let x = rate of rowing,

and y = rate of stream.

Then $$\frac{2}{x-y} = \frac{3}{x+y} \qquad (1)$$

$$\frac{20}{x+y} + \frac{20}{x-y} = 10 \qquad (2)$$

Simplify (1), $$x = 5y \qquad (3)$$

Substitute this value of x in (2),

$$\frac{20}{6y} + \frac{20}{4y} = 10.$$

$$\therefore y = \tfrac{5}{6}.$$

From (3), $$x = 4\tfrac{1}{6}.$$

Therefore, $$\frac{20}{4\frac{1}{6} + \frac{5}{6}} = 4 \text{ (time of running down),}$$

and $$\frac{20}{4\frac{1}{6} - \frac{5}{6}} = 6 \text{ (time of rowing up).}$$

31. A grocer mixed tea that cost him 42 cents a pound with tea that cost him 54 cents a pound. He had 30 pounds of the mixture, and by selling it at the rate of 60 cents a pound, he gained as much as 10 pounds of the cheaper tea cost him. How many pounds of each did he put into the mixture?

Let x = number of pounds of tea at 42 cents,

and y = number of pounds of tea at 54 cents.

Then $x + y = 30$ (1)

$42x + 54y = 1800 - 420$ (2)

Multiply (1) by 42, $42x + 42y = 1260$

$42x + 54y = 1380$

$12y = 120$

$\therefore y = 10.$

$x + 10 = 30.$

$\therefore x = 20.$

32. A grocer mixes tea that cost him 90 cents a pound with tea that cost him 28 cents a pound. The cost of the mixture is $61.20. He sells the mixture at 50 cents a pound, and gains $3.80. How many pounds of each did he put into the mixture?

Let x = number of pounds of tea at 90 cents,

and y = number of pounds of tea at 28 cents.

$28y$ = number of cents second kind cost.

Then $90x + 28y$ = number of cents whole cost,

$x + y$ = number of pounds in whole mixture,

and $50(x + y)$ = number of cents received.

Hence, $50x + 50y = 6500$ (1)

$90x + 28y = 6120$ (2)

Multiply (1) by $\frac{14}{25}$, $28x + 28y = 3640$ (3)

Subtract, $62x = 2480$

$\therefore x = 40.$

Substitute value of x in (1), $y = 90.$

33. A farmer has 28 bushels of barley worth 84 cents a bushel. With his barley he wishes to mix rye worth \$1.08 a bushel, and wheat worth \$1.44 a bushel, so that the mixture may be 100 bushels, and be worth \$1.20 a bushel. How many bushels of rye and of wheat must he take?

Let x = number of bushels of wheat,
and y = number of bushels of rye.
Then 2352 = cost in cents of barley,
$144x$ = cost in cents of wheat,
$108y$ = cost in cents of rye,
and $12{,}000$ = cost in cents of mixture.

$$x + y + 28 = 100,$$
$$x + y = 72 \qquad (1)$$
$$144x + 108y + 2352 = 12000,$$
$$144x + 108y = 9648 \qquad (2)$$

Divide (2) by 36, $4x + 3y = 268$ (3)
Multiply (1) by 3, $3x + 3y = 216$ (4)
Subtract, $x = 52$
Substitute value of x in (1), $y = 20$.

34. A and B together earn \$40 in 6 days; A and C together earn \$54 in 9 days; B and C together earn \$80 in 15 days. What does each earn a day?

Let x = number of dollars A earns in one day,
y = number of dollars B earns in one day,
and z = number of dollars C earns in one day.
Then
$$x + y = \tfrac{40}{6} \qquad (1)$$
$$x + z = 6 \qquad (2)$$
and
$$y + z = \tfrac{80}{15} \qquad (3)$$

Simplify (1), $3x + 3y = 20$ (4)
Simplify (3), $3y + 3z = 16$ (5)
Subtract, $3x - 3z = 4$ (6)
Multiply (2) by 3, $3x + 3z = 18$ (7)
Add, $6x = 22$
$\therefore x = 3\tfrac{2}{3}$.
Substitute value of x in (1), $y = 3$.
Substitute value of x in (2), $z = 2\tfrac{1}{3}$.

35. A cistern has three pipes, A, B, and C. A and B will fill it in 1 hour and 10 minutes; A and C in one hour and 24 minutes; B and C in 2 hours and 20 minutes. How long will it take each to fill it?

Let x = number of minutes it takes A to fill it,

y = number of minutes it takes B to fill it,

and z = number of minutes it takes C to fill it.

$\frac{1}{x}, \frac{1}{y}, \frac{1}{z}$ = parts A, B, C can fill in one minute.

Hence, $$\frac{1}{x}+\frac{1}{y}=\frac{1}{70} \quad (1)$$

$$\frac{1}{x}+\frac{1}{z}=\frac{1}{84} \quad (2)$$

$$\frac{1}{y}+\frac{1}{z}=\frac{1}{140} \quad (3)$$

Add, and divide by 2, $$\frac{1}{x}+\frac{1}{y}+\frac{1}{z}=\frac{1}{60}$$

Subtract (1), $z = 420.$

Subtract (2), $y = 210.$

Subtract (3), $x = 105.$

36. A warehouse will hold 24 boxes and 20 bales; 6 boxes and 14 bales will fill half of it. How many of each alone will it hold?

Let x = number of boxes it will hold,

and y = number of bales it will hold.

Then $\frac{1}{x}, \frac{1}{y}$ = parts one box, one bale, can fill.

Hence, $$\frac{24}{x}+\frac{20}{y}=1 \quad (1)$$

and $$\frac{6}{x}+\frac{14}{y}=\frac{1}{2} \quad (2)$$

$4 \times (2) - (1)$ $$\frac{36}{y}=1.$$

$$\therefore y = 36.$$

Substitute value of y in (2), $x = 54.$

37. Two workmen together complete some work in 20 days; but if the first had worked twice as fast, and the second half as fast, they would have finished it in 15 days. How long would it take each alone to do the work?

Let x = number of days it would take the first alone,

and y = number of days it would take the second alone.

Then $\frac{1}{x}, \frac{1}{y}$ = parts they can do in one day,

$\frac{1}{x}+\frac{1}{y}$ = part both could do in one day,

and $\frac{2}{x}+\frac{1}{2y}$ = part they could do if first worked twice as fast, and second worked half as fast.

$$\therefore \frac{1}{x}+\frac{1}{y}=\frac{1}{20} \qquad (1)$$

and

$$\frac{2}{x}+\frac{1}{2y}=\frac{1}{15} \qquad (2)$$

(1) $-\frac{1}{2}$ of (2) is $\frac{3}{4y}=\frac{1}{60}$.

$\therefore y = 45.$

Substitute value of y in (1), $x = 36.$

38. A purse holds 19 crowns and 6 guineas; 4 crowns and 5 guineas fill $\frac{17}{63}$ of it. How many of each alone will it hold?

Let x = number of crowns bag holds,

y = number of guineas bag holds.

Then $\frac{1}{x}$ = part of bag 1 crown occupies,

$\frac{1}{y}$ = part of bag 1 guinea occupies.

$$\therefore \frac{19}{x}+\frac{6}{y}=1 \qquad (1)$$

and

$$\frac{4}{x}+\frac{5}{y}=\frac{17}{63} \qquad (2)$$

$5\times(1)-6\times(2)$ is $\frac{71}{x}=\frac{213}{63}$

$\therefore x = 21.$

Substitute value of x in (1), $\frac{19}{21}+\frac{6}{y}=1.$

$\therefore y = 63.$

39. A piece of work can be completed by A, B, and C together in 10 days; by A and B together in 12 days; by B and C, if B work 15 days and C 30 days. How long will it take each alone to do the work?

Let x = number of days it takes A,

y = number of days it takes B,

and z = number of days it takes C.

Then $\frac{1}{x}$, $\frac{1}{y}$, and $\frac{1}{z}$, respectively, = part each can do in one day.

$$\therefore \frac{1}{x}+\frac{1}{y}+\frac{1}{z}=\frac{1}{10} \quad (1)$$

$$\frac{1}{x}+\frac{1}{y}=\frac{1}{12} \quad (2)$$

and

$$\frac{15}{y}+\frac{30}{z}=1 \quad (3)$$

Subtract (2) from (1),

$$\frac{1}{z}=\frac{1}{60}$$

$$\therefore z=60.$$

Substitute value of z in (3),

$$\frac{15}{y}+\frac{1}{2}=1.$$

$$\therefore y=30.$$

Substitute value of y in (2),

$$\frac{1}{x}+\frac{1}{30}=\frac{1}{12},$$

$$\frac{1}{x}=\frac{1}{20}.$$

$$\therefore x=20.$$

40. A cistern has three pipes, A, B, and C. A and B will fill it in a minutes; A and C in b minutes; B and C in c minutes. How long will it take each alone to fill it?

Let x = number of minutes it takes A,

y = number of minutes it takes B,

and z = number of minutes it takes C.

Then $\frac{1}{x}$, $\frac{1}{y}$, $\frac{1}{z}$, respectively, = part each fills in one minute,

and $\frac{1}{x}+\frac{1}{y}$ = part A and B fill in one minute.

But $\frac{1}{a}$ = part A and B fill in one minute.

$$\therefore \frac{1}{x}+\frac{1}{y}=\frac{1}{a} \quad (1)$$

$$\frac{1}{x}+\frac{1}{z}=\frac{1}{b} \quad (2)$$

$$\frac{1}{y}+\frac{1}{z}=\frac{1}{c} \quad (3)$$

Add, and divide by 2, $$\frac{1}{x}+\frac{1}{y}+\frac{1}{z}=\frac{bc+ac+ab}{2abc} \quad (4)$$

Subtract (1) from (4), $$\frac{1}{z}=\frac{ac+ab-bc}{2abc}.$$

$$\therefore z=\frac{2abc}{ac+ab-bc}.$$

Subtract (2) from (4), $$\frac{1}{y}=\frac{ab-ac+bc}{2abc}.$$

$$\therefore y=\frac{2abc}{ab-ac+bc}.$$

Subtract (3) from (4), $$\frac{1}{x}=\frac{ac-ab+bc}{2abc}.$$

$$\therefore x=\frac{2abc}{ac-ab+bc}.$$

41. A man has $10,000 invested. For a part of this sum he receives 5 per cent interest, and for the rest 4 per cent; the income from his 5 per cent investment is $50 more than from his 4 per cent. How much has he in each investment?

Let x = number of dollars invested at 5%,

and y = number of dollars invested at 4%.

Then $x+y$ = total number of dollars invested.

$$\therefore x+y=10{,}000 \quad (1)$$

As he receives 5% on x dollars, $\frac{5x}{100}$ = interest at 5%.

As he receives 4% on y dollars, $\frac{4y}{100}$ = interest at 4%.

But interest at 5% is $50 more than that at 4%.

$$\therefore \frac{5x}{100}-\frac{4y}{100}=50 \quad (2)$$

Simplify (2), $5x-4y=5000$

Multiply (1) by 5, $5x+5y=50000$

Subtract, $-9y=-45000$

$$\therefore y=5000.$$

Substitute value of y in (1), $x=5000.$

42. A sum of money at simple interest amounted in 6 years to \$26,000, and in 10 years to \$30,000. Find the sum and the rate of interest.

Let x = number of dollars at interest,

and y = rate of interest.

Then $\frac{xy}{100}$ = interest on x dollars for one year,

$\frac{6xy}{100}$ = interest on x dollars for six years,

and $\frac{10xy}{100}$ = interest on x dollars for ten years.

$$\therefore \frac{6xy}{100} + x = 26{,}000 \qquad (1)$$

and

$$\frac{10xy}{100} + x = 30{,}000 \qquad (2)$$

Multiply (1) by 5, $\frac{30xy}{100} + 5x = 130{,}000$

Multiply (2) by 3, $\frac{30xy}{100} + 3x = 90{,}000$

Subtract, $2x = 40{,}000$

$\therefore x = 20{,}000.$

Substitute value of x in (1), $y = 5.$

43. A sum of money at simple interest amounted in 10 months to \$26,250, and in 18 months to \$27,250. Find the sum and the rate of interest.

Let x = sum,

and y = rate of interest.

Then. $\frac{xy}{100}$ = interest for one year.

Since 10 months equals $\frac{5}{6}$ of a year,

$\frac{5}{6}$ of $\frac{xy}{100}$ = interest for 10 months,

and $\frac{3}{2}$ of $\frac{xy}{100}$ = interest for 18 months.

But $26{,}250 - x$ = interest for 10 months,

and $27{,}250 - x$ = interest for eighteen months.

$$\therefore \frac{5xy}{600} = 26{,}250 - x \qquad (1)$$

and
$$\frac{3xy}{200} = 27{,}250 - x \qquad (2)$$

Multiply (1) by $\frac{3}{5}$,
$$\frac{3xy}{200} = \frac{236{,}250 - 9x}{5}$$

Subtract,
$$0 = \frac{100{,}000 - 4x}{5}$$
$$4x = 100{,}000.$$
$$\therefore x = 25{,}000.$$

Substitute value of x in (2),
$$y = 6.$$

44. A sum of money at simple interest amounted in m years to a dollars, and in n years to b dollars. Find the sum and the rate of interest.

Let $x =$ sum,

and $y =$ rate of interest.

Then $\frac{mxy}{100}$ = interest on sum for m years,

and $\frac{nxy}{100}$ = interest on sum for n years.

$$\therefore \frac{mxy}{100} + x = a \qquad (1)$$

and
$$\frac{nxy}{100} + x = b \qquad (2)$$

Multiply (1) and (2) by 100,
$$mxy + 100x = 100a \qquad (3)$$
$$nxy + 100x = 100b \qquad (4)$$

Multiply (3) by n, $\quad mnxy + 100nx = 100an$

Multiply (4) by m, $\quad mnxy + 100mx = 100bm$

Subtract, $\quad 100nx - 100mx = 100an - 100bm$

Divide by 100, $\quad nx - mx = an - bm,$

$$\therefore x = \frac{an - bm}{n - m}.$$

Substitute value of x in (3),
$$\frac{many - m^2by}{n - m} + \frac{100an - 100bm}{n - m} = 100a.$$

Multiply by $n - m$,
$$many - m^2by + 100an - 100bm = 100an - 100am,$$
$$many - m^2by = 100bm - 100am,$$
$$any - mby = 100b - 100a.$$
$$\therefore y = \frac{100(b - a)}{an - bm}$$

45. A sum of money at simple interest amounted in a months to c dollars, and in b months to d dollars. Find the sum and the rate of interest.

Let x = sum,

and y = rate of interest.

Then $\frac{xy}{100}$ = interest of $\$x$ for one year,

$x + \frac{axy}{1200}$ = amount of $\$x$ for a months,

$x + \frac{bxy}{1200}$ = amount of $\$x$ for b months.

$$\frac{axy}{1200} + x = c \qquad (1)$$

$$\frac{bxy}{1200} + x = d \qquad (2)$$

Simplify (1), $axy + 1200x = 1200c$ (3)

Simplify (2), $bxy + 1200x = 1200d$ (4)

Multiply (3) by b and (4) by a,

$$abxy + 1200bx = 1200bc \qquad (5)$$

$$abxy + 1200ax = 1200ad \qquad (6)$$

(6) − (5) is $1200x(a-b) = 1200(ad-bc)$

$$\therefore x = \frac{ad-bc}{a-b}.$$

Substitute value of x in (3),

$$ay\left(\frac{ad-bc}{a-b}\right) + 1200\left(\frac{ad-bc}{a-b}\right) = 1200c.$$

Simplify, $ay(ad-bc) + 1200(ad-bc) = 1200(ac-bc)$.

Transpose and unite, $ay(ad-bc) = 1200a(c-d)$.

$$\therefore y = \frac{1200(c-d)}{ad-bc}.$$

46. A person has a certain capital invested at a certain rate per cent. Another person has $\$1000$ more capital, and his capital invested at one per cent better than the first, and receives an income $\$80$ greater. A third person has $\$1500$ more capital, and his capital invested at two per cent better than the first, and receives an income $\$150$ greater. Find the capital of each, and the rate at which it is invested.

Let x = capital,
and y = rate.
Then $\frac{(x+1000)(y+1)}{100}$ = interest on capital \$1000 greater, at 1% greater,
and $\frac{(x+1500)(y+2)}{100}$ = interest on capital \$1500 greater, at 2% greater.
$\frac{xy}{100} + 80$ = interest on first capital, increased by \$80,
$\frac{xy}{100} + 150$ = interest on first capital, increased by \$150.

$$\frac{(x+1000)(y+1)}{100} = \frac{xy}{100} + 80 \quad (1)$$

$$\frac{(x+1500)(y+2)}{100} = \frac{xy}{100} + 150 \quad (2)$$

Simplify, $xy + 1000y + x + 1000 = xy + 8000$,
$xy + 1500y + 2x + 3000 = xy + 15000$
Combining, $1000y + x = 7000$ (3)
$1500y + 2x = 12000$ (4)
Multiply (3) by 2, $2000y + 2x = 14000$ (5)
(4) is $1500y + 2x = 12000$
Subtract, $500y = 2000$
$\therefore y = 4.$
Substitute value of y in (5), $x = 3000.$
$\therefore$ the capitals are \$3000, \$4000, \$4500; and the rates 4%, 5%, 6%.

47. A person has \$12,750 to invest. He can buy three per cent bonds at 81, and five per cents at 120. Find the amount of money he must invest in each in order to have the same income from each investment.

Let x = number of dollars in three per cent bonds,
and y = number of dollars in five per cent bonds.
Then $\frac{300x}{81}$ = interest of money invested in three per cents.
But $\frac{500y}{120}$ = interest of money invested in five per cents.

$$\therefore \frac{300x}{81} = \frac{500y}{120} \quad (1)$$

$$x + y = 12750 \quad (2)$$

Reduce (1), $8x - 9y = 0$
Multiply (2) by 8, $8x + 8y = 102000$
Subtract, $17y = 102000$
$\therefore y = 6000.$
Substitute value of y in (2), $x = 6750.$

48. A and B each invested $1500 in bonds; A in three per cents and B in four per cents. The bonds were bought at such prices that B received $5 interest more than A. Both classes of bonds rose ten points, and they sold out, A receiving $50 more than B. What price was paid for each class of bonds?

Let x = amount paid for $1 three per cents,

and y = amount paid for $1 four per cents.

$\frac{1500}{x}$ = face value of three per cents,

$\frac{1500}{y}$ = face value of four per cents.

$\frac{1500}{x} \times \frac{3}{100}$ = income from three per cents,

$\frac{1500}{y} \times \frac{4}{100}$ = income from four per cents.

Then $\left(\frac{1500}{y} \times \frac{4}{100}\right) - \left(\frac{1500}{x} \times \frac{3}{100}\right) = 5,$

$\left(\frac{1500}{x} \times \frac{10}{100}\right) - \left(\frac{1500}{y} \times \frac{10}{100}\right) = 50.$

Simplify, $\frac{60}{y} - \frac{45}{x} = 5$ (1)

$\frac{3}{x} - \frac{3}{y} = 1$ (2)

Multiply (2) by 20, $-\frac{60}{y} + \frac{60}{x} = 20$ (3)

Add (1) and (3), $\frac{3}{x} = 5.$

$\therefore x = 0.60.$

Substitute value of x in (2), $5 - \frac{3}{y} = 1.$

$\therefore y = 0.75.$

That is, the three per cents were bought at 60 and the four per cents at 75.

49. A person invests \$10,000 in three per cent bonds, \$16,500 in three and one-half per cents, and has an income from both investments of \$1056.25. If his investments had been \$2750 more in the three per cents, and less in the three and one-half per cents, his income would have been 62½ cents greater. What price was paid for each class of bonds?

Let x = amount paid on \$1 three per cent bonds,

and y = amount paid on \$1 three and one-half per cent bonds.

Then $\frac{10000}{x} \times \frac{3}{100}$ = number of dollars income from first investment,

and $\frac{16500}{y} \times \frac{3\frac{1}{2}}{100}$ = number of dollars income from second investment.

$$\therefore \frac{30000}{100x} + \frac{115500}{200y} = 1056.25 \qquad (1)$$

$\frac{12750}{x} \times \frac{3}{100}$ = number of dollars income of 3 per cents if the stated addition in the amount invested had been made,

$\frac{13750}{y} \times \frac{3\frac{1}{2}}{100}$ = number of dollars income of 3½ per cents if the stated deduction in the amount invested had been made.

Then $\frac{38250}{100x} + \frac{96250}{200y}$ = number of dollars income on both.

$$\therefore \frac{38250}{100x} + \frac{96250}{200y} = \$1056.87\tfrac{1}{2} \qquad (2)$$

Multiply (1) by 5, $\frac{150000}{100x} + \frac{577500}{200y} = 5281.25 \qquad (3)$

Multiply (2) by 6, $\frac{229500}{100x} + \frac{577500}{200y} = 6341.25 \qquad (4)$

Subtract, $\frac{79500}{100x} = 1060,$

$$106000x = 79500.$$

$$\therefore x = 0.75.$$

That is, the 3 per cent bonds were bought at 75.

Substitute value of x in (1),

$$\frac{30000}{75} + \frac{115500}{200y} = 1056.25,$$

$$\frac{115500}{200y} = 656.25.$$

$$\therefore y = 0.88.$$

That is, the 3½ per cent bonds were bought at 88.

50. The sum of $2500 was divided into two unequal parts and invested, the smaller part at two per cent more than the larger. The *rate* of interest on the larger sum was afterwards increased by 1, and that of the smaller sum diminished by 1; and thus the *interest* of the whole was increased by one-fourth of its value. If the interest of the larger sum had been so increased, and no change been made in the interest of the smaller sum, the interest of the whole would have been increased one-third of its value. Find the sums invested, and the rate per cent of each.

Let x = number of dollars in larger part,

and y = number of dollars in smaller part.

Then $x + y = 2500$ (1)

Let z = rate per cent on larger part,

and $z + 2$ = rate per cent on smaller part.

Then $xz + y(z + 2)$ = interest on whole amount.

Changing rate per cent,

$z + 1$ = rate per cent on larger part,

and $z + 1$ = rate per cent on smaller part.

Then $x(z+1)+y(z+1)$ = interest on whole after change.

Then $x(z+1)+y(z+1) = \frac{5}{4}[xz+y(z+2)]$ (2)

Changing rate per cent again,

$z + 1$ = rate of larger part,

$z + 2$ = rate of smaller part.

Then $x(z+1)+y(z+2) = \frac{4}{3}[xz+y(z+2)]$ (3)

Simplify (2), $4x - 6y - xz - yz = 0.$

Simplify (3), $3x - 2y - xz - yz = 0.$ (4)

Subtract, $x - 4y = 0$ (5)

Subtract (5) from (1), $5y = 2500.$

$\therefore y = 500.$

Substitute value of y in (4), $x = 2000.$

Substitute values of x and y in (3),

$6000 - 1000 - 2000z - 500z = 0,$

$-2500z = -5000.$

$\therefore z = 2.$

51. If the sides of a rectangular field were each increased by 2 yards, the area would be increased by 220 square yards; if the length were increased and the breadth were diminished each by 5 yards, the area would be diminished by 185 square yards. What is its area?

Let x = number of yards in length,
and y = number of yards in width.
Then xy = number of yards in area.

$$(x+2)(y+2) = xy + 220 \quad (1)$$
$$(x+5)(y-5) = xy - 185 \quad (2)$$

Simplify (1), $xy + 2x + 2y + 4 = xy + 220$,
$2x + 2y = 216$,
$x + y = 108$ (3)

Simplify (2), $xy - 5x + 5y - 25 = xy - 185$,
$5x - 5y = 160$
$x - y = 32$ (4)

Add (4) and (3), $2x = 140$
$\therefore x = 70.$

Subtract (4) from (3), $2y = 76.$
$\therefore y = 38.$

$\therefore xy = 2660$ square yards.

52. If a given rectangular floor had been 3 feet longer and 2 feet broader it would have contained 64 square feet more; but if it had been 2 feet longer and 3 feet broader it would have contained 68 square feet more. Find the length and breadth of the floor.

Let x = number of feet in length,
and y = number of feet in breadth.
Then xy = number of feet in surface.

$$(x+3)(y+2) = xy + 64 \quad (1)$$
$$(x+2)(y+3) = xy + 68 \quad (2)$$

Simplify (1), $xy + 3y + 2x + 6 = xy + 64.$
$3y + 2x = 58$ (3)

Simplify (2), $xy + 2y + 3x + 6 = xy + 68.$
$2y + 3x = 62$ (4)

Multiply (3) by 2, $6y + 4x = 116$ (5)
Multiply (4) by 3, $6y + 9x = 186$ (6)

Subtract, $-5x = -70$
$\therefore x = 14.$

Substitute value of x in (3), $3y + 28 = 58,$
$3y = 30.$
$\therefore y = 10.$

53. In a certain rectangular garden there is a strawberry-bed whose sides are one-third of the lengths of the corresponding sides of the garden. The perimeter of the garden exceeds that of the bed by 200 yards; and if the greater side of the garden be increased by 3, and the other by 5 yards, the garden will be enlarged by 645 square yards. Find the length and breadth of the garden.

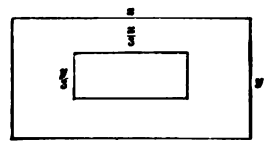

Let x = number of yards in length of garden,

and y = number of yards in width of garden.

Then $2x + 2y$ = perimeter of garden,

and xy = area of garden.

Also, $\frac{x}{3}$ = number of yards in length of bed,

and $\frac{y}{3}$ = number of yards in width of bed.

Then $\frac{2x}{3} + \frac{2y}{3}$ = perimeter of bed.

Add 3 to one side of garden, $x + 3$.

Add 5 to other side of garden, $y + 5$.

Then $(x+3)(y+5)$ = area.

$$2x + 2y - \left(\frac{2x}{3} + \frac{2y}{3}\right) = 200.$$

Simplify, $$x + y = 150 \qquad (1)$$

$$(x + 3)(y + 5) = xy + 645.$$

Simplify, $$5x + 3y = 630 \qquad (2)$$

Multiply (1) by 5, $$5x + 5y = 750$$

Subtract, $$2y = 120$$

$$\therefore y = 60.$$

Substitute value of y in (1), $$x + 60 = 150.$$

$$\therefore x = 90.$$

54. In a mile race A gives B a start of 100 yards, and beats him by 15 seconds. In the second trial A gives B a start of 45 seconds, and is beaten by 22 yards. Find the rate of each in miles per hour.

Let x = number of yards A runs in one second,

and y = number of yards B runs in one second.

Since there are 1760 yards in one mile,

$\frac{1760}{x}$ and $\frac{1738}{x}$ = number of seconds A ran in first and second trials respectively,

$\frac{1660}{y}$ and $\frac{1760}{y}$ = number of seconds B ran in first and second trials respectively.

Then $$\frac{1660}{y} - \frac{1760}{x} = 15 \qquad (1)$$

and $$\frac{1738}{x} - \frac{1760}{y} = -45 \qquad (2)$$

Multiply (1) by 88, $$\frac{146080}{y} - \frac{154880}{x} = 1320$$

Multiply (2) by 83, $$-\frac{146080}{y} + \frac{144254}{x} = -3735$$

Add, $$-\frac{10626}{x} = -2415$$

$$\therefore x = 4\tfrac{966}{2415}.$$

Therefore, A runs $4\frac{966}{2415}$ yards, or $\frac{1}{460}$ of a mile, in one second, and in one hour (= 3600 seconds), 9 miles.

Substitute value of x in (1), $y = 4$.

Therefore, B runs 4 yards in one second, or $8\frac{2}{11}$ miles in one hour.

55. In a mile race A gives B a start of 44 yards, and beats him by 51 seconds. In the second trial A gives B a start of 1 minute and 15 seconds, and is beaten by 88 yards. Find the rate of each in miles per hour.

Let x = number of yards A ran in one second,

and y = number of yards B ran in one second.

$\frac{1760}{x}$, $\frac{1672}{x}$ = number of seconds A ran in first and second trials, respectively.

$\frac{1716}{y}$, $\frac{1760}{y}$ = number of seconds B ran in first and second trials, respectively.

Then $$\frac{1716}{y} - \frac{1760}{x} = 51 \qquad (1)$$

and $$\frac{1672}{x} - \frac{1760}{y} = -75 \qquad (2)$$

Multiply (1) by 19, $$-\frac{33440}{x} + \frac{32604}{y} = 969$$

Multiply (2) by 20, $$\frac{33440}{x} - \frac{35200}{y} = -1500$$

Add, $$-\frac{2596}{y} = -531$$

$$\therefore y = 4\tfrac{8}{9}.$$

Therefore, B runs $4\frac{8}{9}$ yards per second, or 10 miles per hour.
Substitute value of y in (1), $x = 5\frac{1}{11}$.
Therefore, A runs $5\frac{1}{11}$ yards per second, or 12 miles per hour.

56. The time which an express-train takes to go 120 miles is $\frac{9}{14}$ of the time taken by an accommodation-train. The slower train loses as much time in stopping at different stations as it would take to travel 20 miles without stopping; the express-train loses only half as much time by stopping as the accommodation-train, and travels 15 miles an hour faster. Find the rate of each train in miles per hour.

Let x = the rate of the accommodation-train,

and y = the rate of the express-train.

$\frac{120}{x}$ = number of hours accommodation-train goes 120 miles without stopping,

$\frac{120}{y}$ = number of hours it takes express-train to go 120 miles without stopping,

$\frac{20}{x}$ = number of hours accommodation-train loses in stopping,

$\frac{10}{x}$ = number of hours express-train loses in stopping,

$\frac{120}{x} + \frac{20}{x}$ = number of hours accommodation-train goes 120 miles including stops,

$\frac{120}{y} + \frac{10}{x}$ = number of hours express-train goes 120 miles including stops.

$$\therefore \frac{120}{y} + \frac{10}{x} = \frac{9}{14}\left(\frac{120}{x} + \frac{20}{x}\right) \quad (1)$$

$$y - x = 15 \quad (2)$$

Simplify (1), $120x - 80y = 0$

Multiply (2) by 80, $-80x + 80y = 1200$

Add, $40x = 1200$

$\therefore x = 30.$

Substitute value of x in (2), $y = 45.$

57. A train moves from P towards Q, and an hour later a second train starts from Q and moves towards P at a rate of 10 miles an hour more than the first train; the trains meet half-way between P and Q. If the train from P had started an hour after the train from Q, its rate must have been increased by 28 miles in order that the trains should meet at the half-way point. Find the distance from P to Q.

Let x = number of hours first goes half the distance.

Then $x - 1$ = number of hours second goes half the distance.

Let y = rate of first.

Then $y + 10$ = rate of second.

Hence, xy = one-half of the whole distance.

But $(x-1)(y+10)$ = one-half the whole distance.

$\therefore (x-1)(y+10) = xy.$

Simplify, $10x - y = 10$ (1)

In second statement,

if $x - 2$ = number of hours first goes half distance,

and $y + 28$ = rate of first,

then $(x-2)(y+28)$ = one-half of the whole distance.

But, from (1), xy = one-half of the whole distance.

$\therefore (x-2)(y+28) = xy$ (2)

Simplify (2), $28x - 2y = 56$

$2 \times$ (1) is $20x - 2y = 20$

Subtract, $8x = 36$

$\therefore x = 4\frac{1}{2}.$

Substitute value of x in (1), $y = 35.$

Therefore, one-half the distance, xy, is $157\frac{1}{2}$ miles, and the whole distance is 315 miles.

58. A passenger-train, after travelling an hour, meets with an accident which detains it one-half an hour; after which it proceeds at four-fifths of its usual rate, and arrives an hour and a quarter late. If the accident had happened 30 miles farther on, the train would have been only an hour late. Determine the usual rate of the train.

Let x = number of miles train usually goes per hour,

and y = number of miles train travels.

$\frac{y-x}{x}$ = number of hours usually required,

and $\frac{y-x}{\frac{4x}{5}}$ = number of hours actually required after accident.

Since the detention is $\frac{1}{2}$ hour, and the train is $1\frac{1}{4}$ hours late, the loss in running-time is $\frac{3}{4}$ of an hour.

$$\therefore \frac{y-x}{\frac{4x}{5}} - \frac{y-x}{x} = \frac{3}{4} \qquad (1)$$

If the accident had occurred 30 miles farther on, the loss in running-time would have been $\frac{1}{2}$ an hour.

$$\therefore \frac{y-x-30}{\frac{4x}{5}} - \frac{y-x-30}{x} = \frac{1}{2} \qquad (2)$$

Simplify (1), $y - 4x = 0$

Simplify (2), $y - 3x = 30$

Subtract, $x = 30$

59. A passenger-train, after travelling an hour, is detained 15 minutes; after which it proceeds at three-fourths of its former rate, and arrives 24 minutes late. If the detention had taken place 5 miles farther on, the train would have been only 21 minutes late. Determine the usual rate of the train.

Let x = usual rate of train per hour,

and y = number of miles train has to run.

$y - x$ = number of miles train has to run after detention,

$\frac{y-x}{x}$ = number of hours usually required to run $y-x$ miles,

and $\frac{y-x}{\frac{3x}{4}}$ = number of hours actually required to run the $y-x$ miles.

Since the detention was 15 minutes, and the train is 24 minutes late, the loss in running-time is 9 minutes $= \frac{3}{20}$ of an hour.

$$\therefore \frac{y-x}{\frac{3x}{4}} - \frac{y-x}{x} = \frac{3}{20} \qquad (1)$$

If the detention had occurred 5 miles farther on, the loss in running-time would have been 6 minutes $= \frac{1}{10}$ of an hour.

$$\therefore \frac{y-x-5}{\frac{3x}{4}} - \frac{y-x-5}{x} = \frac{1}{10} \qquad (2)$$

Simplify (1), $20y - 29x = 0$

Simplify (2), $20y - 26x = 100$

Subtract, $3x = 100$

$\therefore x = 33\frac{1}{3}$.

60. A man bought 10 oxen, 120 sheep, and 46 lambs. The cost of 3 sheep was equal to that of 5 lambs; an ox, a sheep, and a lamb together cost a number of dollars less by 57 than the whole number of animals bought; and the whole sum spent was $2341.50. Find the price of an ox, a sheep, and a lamb, respectively.

Let x = number of dollars paid for an ox,

y = number of dollars paid for a sheep,

and z = number of dollars paid for a lamb.

$10x + 120y + 46z$ = number of dollars paid for all.

$$\therefore 10x + 120y + 46z = 2341.50 \qquad (1)$$

$$x + y + z = 119 \qquad (2)$$

$$3y = 5z \qquad (3)$$

(1) is $10x + 120y + 46z = 2341.50$

Multiply (2) by 10, $10x + 10y + 10z = 1190$

Subtract, $110y + 36z = 1151.50$ (4)

Multiply (4) by 3, $330y + 108z = 3454.50$.

Multiply (3) by 110, $330y - 550z = 0$.

Subtract, $658z = 3454.50$.

$\therefore z = 5.25$.

Substitute value of z in (3), $y = 8.75$.

Substitute values of y and z in (2), $x = 105$.

61. A farmer sold 100 head of stock, consisting of horses, oxen, and sheep, so that the whole realized $11.75 a head; while a horse, an ox, and a sheep were sold for $110, $62.50, and $7.50, respectively. Had he sold one-fourth of the number of oxen that he did, and 25 more sheep, he would have received the same sum. Find the number of horses, oxen, and sheep, respectively, which were sold.

Let x = number of horses,

y = number of oxen,

and z = number of sheep.

Then
$$x + y + z = 100 \qquad (1)$$
$$110x + 62\tfrac{1}{2}y + 7\tfrac{1}{2}z = 1175 \qquad (2)$$
and
$$110x + \left(\frac{1}{4} \times \frac{125y}{2}\right) + \frac{15z}{2} + \frac{375}{2} = 1175 \qquad (3)$$

Multiply (3) by 8, $880x + 125y + 60z = 7900$

Multiply (2) by 8, $880x + 500y + 60z = 9400$

Subtract, $-375y = -1500$

$$\therefore y = 4.$$

Substitute value of y in (1), $x + z = 96 \qquad (4)$

Substitute value of y in (2),

$$110x + 250 + 7\tfrac{1}{2}z = 1175.$$
$$110x + 7\tfrac{1}{2}z = 925.$$

Multiply by 2, $220x + 15z = 1850$

Multiply (4) by 15, $15x + 15z = 1440$

Subtract, $205x = 410$

$$\therefore x = 2.$$

Substitute values of x and y in (1), $z = 94$.

62. A, B, and C together subscribed \$100. If A's subscription had been one-tenth less, and B's one-tenth more, C's must have been increased by \$2 to make up the sum; but if A's had been one-eighth more, and B's one-eighth less, C's subscription would have been \$17.50. What did each subscribe?

Let x = number of dollars A subscribed,

y = number of dollars B subscribed,

and z = number of dollars C subscribed.

$\frac{9x}{10}$ = $\frac{9}{10}$ of A's subscription,

$\frac{11y}{10}$ = $\frac{11}{10}$ of B's subscription,

$z + 2$ = \$2 more than C's subscription,

$\frac{9x}{8}$ = $\frac{9}{8}$ of A's subscription,

$\frac{7y}{8}$ = $\frac{7}{8}$ of B's subscription,

100 = number of dollars all subscribed,

$\frac{9x}{10} + \frac{11y}{10} + z + 2$ = number of dollars all subscribed,

$\frac{9x}{8} + \frac{7y}{8} + 17.5$ = number of dollars all subscribed.

$$\therefore x + y + z = 100 \qquad (1)$$

$$\frac{9x}{10} + \frac{11y}{10} + z + 2 = 100 \qquad (2)$$

$$\frac{9x}{8} + \frac{7y}{8} + 17.5 = 100 \qquad (3)$$

Multiply (1) by 10, $10x + 10y + 10z = 1000$

Simplify (2), $9x + 11y + 10z = 980$

Subtract, $x - y = 20$ (4)

Simplify (3), $9x + 7y = 660$

Multiply (4) by 7, $7x - 7y = 140$

Add, $16x = 800$

$\therefore x = 50.$

Substitute value of x in (4), $y = 30.$

Substitute values of x and y in (1), $z = 20.$

63. A gives to B and C as much as each of them has; B gives to A and C as much as each of them then has; and C gives to A and B as much as each of them then has. In the end each of them has $6. How much had each at first?

Let x = number of dollars A had at first,

y = number of dollars B had at first,

and z = number of dollars C had at first.

$x-y-z$ = number of dollars A had at 1st distribution,

$2y$ = number of dollars B had at 1st distribution,

$2z$ = number of dollars C had at 1st distribution,

$2y-\{(x-y-z)+2z\}$ = number of dollars B had at 2d distribution,

or $3y-x-z$ = number of dollars B had at 2d distribution,

$2x-2y-2z$ = number of dollars A had at 2d distribution,

$4z$ = number of dollars C had at 2d distribution,

$4z-\{(2x-2y-2z)+(3y-x-z)\}$, or $7z-x-y$

= number of dollars C had at 3d distribution,

$4x-4y-4z$ = number of dollars A had at 3d distribution,

$6y-2x-2z$ = number of dollars B had at 3d distribution.

$$\therefore\ 7z-x-y=6 \qquad (1)$$

$$4x-4y-4z=6 \qquad (2)$$

$$6y-2x-2z=6 \qquad (3)$$

Multiply (1) by 4, $28z-4x-4y=24$

(2) is $-4z+4x-4y=6$

Add, $24z-8y=30$ (4)

Multiply (1) by 2, $14z-2x-2y=12$

(3) is $-2z-2x+6y=6$

Subtract, $16z-8y=6$ (5)

(4) is $24z-8y=30$

Subtract, $8z=24$

$$\therefore\ z=3.$$

Substitute value of z in (5), $y=5\frac{1}{4}$.

Substitute values of y and z in (1), $x=9\frac{3}{4}$.

64. A pays to B and C as much as each of them has; B pays to A and C one-half as much as each of them then has; and C pays to A and B one-third of what each of them then has. In the end A finds that he has \$1.50, B \$4.16⅔, C \$0.58⅓. How much had each at first?

Let x = number of dollars A had at first,

y = number of dollars B had at first,

and z = number of dollars C had at first.

$x-y-z$ = number of dollars A has left after giving to B and C,

$2y$ = number of dollars B has after A pays him,

$2z$ = number of dollars C has after A pays him,

$\frac{3x-3y-3z}{2}$ = number of dollars A has after B pays him,

$\frac{5y-x-z}{2}$ = number of dollars B has left after paying A and C,

$3z$ = number of dollars C has after receiving B's money,

$\frac{4x-4y-4z}{2}$ = number of dollars A has after C pays him,

$\frac{10y-2x-2z}{3}$ = number of dollars B has after C pays him,

$\frac{11z-x-y}{3}$ = number of dollars C has after paying A and B.

$$\therefore \frac{4x-4y-4z}{2} = 1.50 \quad (1)$$

$$\frac{10y-2x-2z}{3} = 4.16\tfrac{2}{3} \quad (2)$$

$$\frac{11z-x-y}{3} = 0.58\tfrac{1}{3} \quad (3)$$

Simplify (1), $x-y-z = 0.75$ (4)

Simplify (2), $10y-2x-2z = 12.50$ (5)

Simplify (3), $11z-x-y = 1.75$ (6)

(4) is $x-y-z = 0.75$

Add (4) and (6), $10z-2y = 2.50$ (7)

(5) is $10y-2x-2z = 12.50$

Multiply (4) by 2, $-2y+2x-2z = 1.50$

Add, $8y-4z = 14.00$ (8)

Multiply (7) by 4, $-8y+40z = 10.00$

(8) is $8y-4z = 14.00$

Add, $36z = 24.00$

$\therefore z = 0.66\tfrac{2}{3}.$

Substitute value of z in (8), $y = 2.08\tfrac{1}{3}.$

Substitute values of y and z in (4), $x = 3.50.$

Exercise 70.

1. $2x + 11y = 49.$

Transpose, $2x = 49 - 11y.$

$$\therefore x = 24 - 5y + \frac{1-y}{2}.$$

Let $\frac{1-y}{2} = m,$

$$1 - y = 2m.$$

$$\therefore y = 1 - 2m.$$

Substitute value of y in original equation,

$$2x + 11 - 22m = 49.$$

$$\therefore x = 19 + 11m.$$

If $m = 0, \quad x = 19, y = 1.$

If $m = -1, x = 8, \quad y = 3.$

2. $7x + 3y = 40.$

Transpose, $3y = 40 - 7x.$

$$\therefore y = 13 - 2x + \frac{1-x}{3}.$$

Let $\frac{1-x}{3} = m,$

$$1 - x = 3m.$$

$$\therefore x = 1 - 3m.$$

Substitute value of x in original equation,

$$7 - 21m + 3y = 40,$$

$$3y = 21m + 33.$$

$$\therefore y = 7m + 11.$$

If $m = 0, \quad y = 11, x = 1.$

If $m = -1, y = 4, \quad x = 4.$

3. $5x + 7y = 53.$

Transpose, $5x = 53 - 7y.$

$$\therefore x = 10 - y + \frac{3-2y}{5}.$$

$$x - 10 + y = \frac{3-2y}{5}.$$

Multiply by 3,

$$3x - 30 + 3y = \frac{9-6y}{5}$$

$$= 1 - y + \frac{4-y}{5}.$$

Let $\frac{4-y}{5} = m,$

$$4 - y = 5m.$$

$$\therefore y = 4 - 5m.$$

From given equation,

$$x = 5 + 7m.$$

If $m = 0, \quad x = 5, \quad y = 4.$

4. $x + 10y = 29.$

Transpose, $x = 29 - 10y.$

If $y = 1, x = 19.$

If $y = 2, x = 9.$

If $y = 3, x = -1.$

$\therefore y$ can only = 1 or 2,

x can only = 19 or 9.

5. $3x + 8y = 61.$

$3x = 61 - 8y.$

$\therefore x = 20 - 2y + \frac{1-2y}{3}.$

$x - 20 + 2y = \frac{1-2y}{3}.$

Multiply by 2,

$2x - 40 + 4y = \frac{2-4y}{3}$

$= -y + \frac{2-y}{3}.$

Let $\frac{2-y}{3} = m,$

$2 - y = 3m.$

$\therefore y = 2 - 3m.$

Substitute in original equation,

$3x + 16 - 24m = 61,$

$3x = 45 + 24m.$

$\therefore x = 15 + 8m.$

If $m = 0,$ $x = 15,$ $y = 2.$

If $m = -1,$ $x = 7,$ $y = 5.$

6. $8x + 5y = 97.$

$5y = 97 - 8x.$

$\therefore y = 19 - x + \frac{2-3x}{5}.$

$y - 19 + x = \frac{2-2x}{5}.$

Multiply by 2,

$2y - 38 + 2x = \frac{4-6x}{5}$

$= -x + \frac{4-x}{5}.$

Let $\frac{4-x}{5} = m.$

$\therefore x = 4 - 5m.$

Substitute in original equation,

$32 - 40m + 5y = 97,$

$5y = 65 + 40m.$

$\therefore y = 13 + 8m.$

If $m = 0,$ $x = 4,$ $y = 13.$

If $m = -1,$ $x = 9,$ $y = 5.$

7. $16x + 7y = 110.$

$7y = 110 - 16x.$

$\therefore y = 15 - 2x + \frac{5-2x}{7}.$

Transpose,

$y + 2x - 15 = \frac{5-2x}{7}.$

Multiply by 4,

$4y + 8x - 60 = \frac{20-8x}{7}$

$= 2 - x + \frac{6-x}{7}.$

Let $\frac{6-x}{7} = m,$

$6 - x = 7m.$

$\therefore x = 6 - 7m.$

Substitute in original equation,

$96 - 112m + 7y = 110,$

$7y = 14 + 112m.$

$\therefore y = 2 + 16m.$

If $m = 0,$ $x = 6,$ $y = 2.$

8. $7x + 10y = 206.$

$7x = 206 - 10y.$

$\therefore x = 29 - y + \frac{3-3y}{7}.$

$x - 29 + y = \frac{3(1-y)}{7}.$

Let $\frac{1-y}{7} = m.$

$\therefore y = 1 - 7m.$

Substitute in original equation,

$7x + 10 - 70m = 206,$

$7x = 196 + 70m.$

$\therefore x = 28 + 10m.$

If $m = 0,$ $x = 28,$ $y = 1.$

If $m = -1,$ $x = 18,$ $y = 8.$

If $m = -2,$ $x = 8,$ $y = 15.$

9. $12x - 7y = 1.$

Transpose, $7y = 12x - 1.$

$$\therefore y - x = \frac{5x-1}{7}.$$

Multiply by 3,

$$3y - 3x = 2x + \frac{x-3}{7}.$$

Let $\frac{x-3}{7} = m.$

$$\therefore x = 7m + 3.$$

Substitute this value of x in original equation,

$$84m + 36 - 7y = 1,$$

$$7y = 35 + 84m.$$

$$\therefore y = 5 + 12m.$$

If $m = 0,\ x = 3,\ y = 5.$

10. $5x - 17y = 23.$

$$5x = 23 + 17y.$$

$$\therefore x = 4 + 3y + \frac{3+2y}{5}.$$

$$x - 4 - 3y = \frac{3+2y}{5}.$$

Multiply by 3,

$$3x - 12 - 9y = 1 + y + \frac{4+y}{5}.$$

Let $\frac{4+y}{5} = m.$

Then $y = 5m - 4.$

Substitute this value of y in original equation,

$$5x - 17(5m - 4) = 23,$$

$$5x - 85m + 68 = 23,$$

$$5x = 85m - 45.$$

$$\therefore x = 17m - 9.$$

If $m = 1,\ x = 8,\ y = 1.$

11. $23y - 13x = 3.$

Transpose, $13x = 23y - 3.$

$$\therefore x - y = \frac{10y-3}{13}$$

Multiply by 4,

$$4x - 4y = 3y + \frac{y-12}{13}.$$

Let $\frac{y-12}{13} = m.$

$$\therefore y = 13m + 12.$$

Substitute this value of y in original equation,

$$23(13m + 12) - 13x = 3,$$

$$13x = 299m + 273.$$

$$\therefore x = 23m + 21.$$

If $m = 0,\ x = 21,\ y = 12.$

12. $23x - 9y = 929.$

$$9y = 23x - 929.$$

$$\therefore y = 2x - 103 + \frac{5x-2}{9}.$$

$$y - 2x + 103 = \frac{5x-2}{9}.$$

Multiply by 2,

$$2y - 4x + 206 = x + \frac{x-4}{9}$$

Let $\frac{x-4}{9} = m.$

Then $x - 4 = 9m.$

$$\therefore x = 9m + 4.$$

Substitute this value of y in original equation,

$$207m + 92 - 9y = 929,$$

$$9y = 207m - 837.$$

$$\therefore y = 23m - 93.$$

If $m = 5,\ x = 49,\ y = 22.$

5. $3x + 8y = 61.$

$$3x = 61 - 8y.$$

$$\therefore x = 20 - 2y + \frac{1-2y}{3}.$$

$$x - 20 + 2y = \frac{1-2y}{3}.$$

Multiply by 2,

$$2x - 40 + 4y = \frac{2-4y}{3}$$

$$= -y + \frac{2-y}{3}.$$

Let $\frac{2-y}{3} = m,$

$$2 - y = 3m.$$

$$\therefore y = 2 - 3m.$$

Substitute in original equation,

$$3x + 16 - 24m = 61,$$

$$3x = 45 + 24m.$$

$$\therefore x = 15 + 8m.$$

If $m = 0,$ $x = 15,$ $y = 2.$
If $m = -1,$ $x = 7,$ $y = 5.$

6. $8x + 5y = 97.$

$$5y = 97 - 8x.$$

$$\therefore y = 19 - x + \frac{2-3x}{5}.$$

$$y - 19 + x = \frac{2-2x}{5}.$$

Multiply by 2,

$$2y - 38 + 2x = \frac{4-6x}{5}$$

$$= -x + \frac{4-x}{5}.$$

Let $\frac{4-x}{5} = m.$

$$\therefore x = 4 - 5m.$$

Substitute in original equation,

$$32 - 40m + 5y = 97,$$

$$5y = 65 + 40m.$$

$$\therefore y = 13 + 8m.$$

If $m = 0,$ $x = 4,$ $y = 13.$
If $m = -1,$ $x = 9,$ $y = 5.$

7. $16x + 7y = 110.$

$$7y = 110 - 16x.$$

$$\therefore y = 15 - 2x + \frac{5-2x}{7}.$$

Transpose,

$$y + 2x - 15 = \frac{5-2x}{7}.$$

Multiply by 4,

$$4y + 8x - 60 = \frac{20-8x}{7}$$

$$= 2 - x + \frac{6-x}{7}.$$

Let $\frac{6-x}{7} = m,$

$$6 - x = 7m.$$

$$\therefore x = 6 - 7m.$$

Substitute in original equation,

$$96 - 112m + 7y = 110,$$

$$7y = 14 + 112m.$$

$$\therefore y = 2 + 16m.$$

If $m = 0,$ $x = 6,$ $y = 2.$

8. $7x + 10y = 206.$

$$7x = 206 - 10y.$$

$$\therefore x = 29 - y + \frac{3-3y}{7}.$$

$$x - 29 + y = \frac{3(1-y)}{7}.$$

Let $\frac{1-y}{7} = m.$

$$\therefore y = 1 - 7m.$$

Substitute in original equation,

$$7x + 10 - 70m = 206,$$

$$7x = 196 + 70m.$$

$$\therefore x = 28 + 10m.$$

If $m = 0,$ $x = 28,$ $y = 1.$
If $m = -1,$ $x = 18,$ $y = 8.$
If $m = -2,$ $x = 8,$ $y = 15.$

9. $12x - 7y = 1.$

Transpose, $7y = 12x - 1.$

$$\therefore y - x = \frac{5x-1}{7}.$$

Multiply by 3,

$$3y - 3x = 2x + \frac{x-3}{7}.$$

Let $\frac{x-3}{7} = m.$

$$\therefore x = 7m + 3.$$

Substitute this value of x in original equation,

$$84m + 36 - 7y = 1,$$

$$7y = 35 + 84m.$$

$$\therefore y = 5 + 12m.$$

If $m = 0,\ x = 3,\ y = 5.$

11. $23y - 13x = 3.$

Transpose, $13x = 23y - 3.$

$$\therefore x - y = \frac{10y-3}{13}$$

Multiply by 4,

$$4x - 4y = 3y + \frac{y-12}{13}.$$

Let $\frac{y-12}{13} = m.$

$$\therefore y = 13m + 12.$$

Substitute this value of y in original equation,

$$23(13m + 12) - 13x = 3,$$

$$13x = 299m + 273.$$

$$\therefore x = 23m + 21.$$

If $m = 0,\ x = 21,\ y = 12.$

10. $5x - 17y = 23.$

$$5x = 23 + 17y.$$

$$\therefore x = 4 + 3y + \frac{3+2y}{5}.$$

$$x - 4 - 3y = \frac{3+2y}{5}.$$

Multiply by 3,

$$3x - 12 - 9y = 1 + y + \frac{4+y}{5}.$$

Let $\frac{4+y}{5} = m.$

Then $y = 5m - 4.$

Substitute this value of y in original equation,

$$5x - 17(5m - 4) = 23,$$

$$5x - 85m + 68 = 23,$$

$$5x = 85m - 45.$$

$$\therefore x = 17m - 9.$$

If $m = 1,\ x = 8,\ y = 1.$

12. $23x - 9y = 929.$

$$9y = 23x - 929.$$

$$\therefore y = 2x - 103 + \frac{5x-2}{9}.$$

$$y - 2x + 103 = \frac{5x-2}{9}.$$

Multiply by 2,

$$2y - 4x + 206 = x + \frac{x-4}{9}$$

Let $\frac{x-4}{9} = m.$

Then $x - 4 = 9m.$

$$\therefore x = 9m + 4.$$

Substitute this value of y in original equation,

$$207m + 92 - 9y = 929,$$

$$9y = 207m - 837.$$

$$\therefore y = 23m - 93.$$

If $m = 5,\ x = 49,\ y = 22.$

13.

$$23x - 33y = 43.$$

$$23x = 33y + 43.$$

$$\therefore x = 1 + y + \frac{10(y+2)}{23}.$$

Let $$\frac{y+2}{23} = m.$$

Then $$y = 23m - 2.$$

Substitute this value of y in original equation,

$$23x - 33(23m - 2) = 43,$$

$$23x - 759m + 66 = 43,$$

$$23x = 759m - 23.$$

$$\therefore x = 33m - 1.$$

If $$m = -1,\ x = 32,\ y = 21.$$

14.

$$555x - 22y = 73.$$

$$22y = 555x - 73.$$

$$\therefore y = 25x - 3 + \frac{5x-7}{22}$$

Transpose, $$y - 25x + 3 = \frac{5x-7}{22}.$$

Multiply by 9, $$9y - 225x + 27 = 2x + 2 + \frac{x-19}{22}.$$

Let $$\frac{x-19}{22} = m.$$

Then $$x - 19 = 22m.$$

$$\therefore x = 19 + 22m.$$

Substitute value of x in original equation,

$$555(19 + 22m) - 22y = 73,$$

$$10545 + 12210m - 22y = 73,$$

$$22y = 10472 + 12210m.$$

$$\therefore y = 476 + 555m.$$

If $$m = 0,\ x = 19,\ y = 476.$$

15. How many fractions are there with denominators 12 and 18 whose sum is $\frac{25}{36}$?

Let $\frac{x}{12} + \frac{y}{18} = \frac{25}{36}$.

Simplify, $3x + 2y = 25$,

$2y = 25 - 3x$.

$\therefore y = 12 - x + \frac{1-x}{2}$.

Let $\frac{1-x}{2} = m$.

Then $1 - x = 2m$.

$\therefore x = 1 - 2m$.

Substitute value of x in original equation,

$3 - 6m + 2y = 25$.

$\therefore y = 11 + 3m$.

If $m = 0$, $x = 1$, $y = 11$.

If $m = -1$, $x = 3$, $y = 8$.

If $m = -2$, $x = 5$, $y = 5$.

If $m = -3$, $x = 7$, $y = 2$.

Hence, the pairs of fractions are

$\frac{1}{12}, \frac{11}{18}$; $\frac{3}{12}, \frac{8}{18}$; $\frac{5}{12}, \frac{5}{18}$; $\frac{7}{12}, \frac{2}{18}$.

16. What is the least number which, when divided by 3 and 5, leaves remainders 2 and 3 respectively?

Let n = number,

$\frac{n-2}{3} = x$ (1)

$\frac{n-3}{5} = y$ (2)

From (1) and (2), $n = 3x + 2$ and $5y + 3$.

$\therefore 3x + 2 = 5y + 3$,

$3x = 5y + 1$ (3)

$\therefore x = 1 + \frac{2y+1}{3}$.

Transpose, $x - 1 = \frac{2y+1}{3}$.

Multiply by 2, $2x - 2 = y + \frac{y+2}{3}$.

Let $\frac{y+2}{3} = m$.

Then $y = 3m - 2$.

From (3), $3x = 15m - 9$.

$\therefore x = 5m - 3$.

If $m = 1$, $x = 2$, $y = 1$.

But $n = 3x + 2$.

$\therefore n = 8$.

17. A person counting a basket of eggs, which he knows are between 50 and 60, finds that when he counts them 3 at a time there are 2 over; but when he counts them 5 at a time there are 4 over. How many are there in all?

Let $\frac{n-2}{3} = x,$

and $\frac{n-4}{5} = y.$

Then $n = 2 + 3x$ or $4 + 5y.$

$\therefore 2 + 3x = 4 + 5y,$

$3x = 2 + 5y \qquad (1)$

$x = y + \frac{2(1+y)}{3}.$

Let $\frac{1+y}{3} = m.$

Then $y = 3m - 1.$

Substitute value of y in (1), $3x = 2 + 5(3m - 1),$

$3x = 15m - 3.$

$\therefore x = 5m - 1.$

If $m = 4,\ x = 19,\ y = 11.$

Hence, the number of eggs is 59.

18. A person bought 40 animals, consisting of pigs, geese, and chickens, for $40. The pigs cost $5 apiece, the geese $1, and the chickens 25 cents each. Find the number he bought of each.

Let $x =$ number of pigs,

and $y =$ number of geese.

Then $40 - x - y =$ number of chickens.

$$5x + y + 10 - \frac{x}{4} - \frac{y}{4} = 40 \qquad (1)$$

or $20x + 4y + 40 - x - y = 160,$

or $19x + 3y = 120,$

$3y = 120 - 19x \qquad (2)$

$y = 40 - 6x - \frac{x}{3}.$

Let $\frac{x}{3} = m.$

$\therefore x = 3m.$

Substitute value of x in (2), $3y = 120 - 57m.$

$\therefore y = 40 - 19m.$

If $m = 1,\ x = 3,\ y = 21.$

If $m = 2,\ x = 6,\ y = 2.$

Hence, he bought 3 pigs, 21 geese, and 16 chickens; or 6 pigs, 2 geese, and 32 chickens.

19. Find the least multiple of 7 which, when divided by 2, 3, 4, 5, 6, leaves in each case 1 for a remainder.

Let $7x$ = least multiple of 7,
and y = sum of quotients.
Then

$$\frac{7x-1}{2}+\frac{7x-1}{3}+\frac{7x-1}{4}+\frac{7x-1}{5}+\frac{7x-1}{6}=y.$$

Simplify,

$$210x-30+140x-20+105x-15$$
$$+84x-12+70x-10=60y,$$
$$609x-60y=87.$$

Divide by 3, $203x-20y=29$ (1)

$$-20y=-203x+29.$$
$$\therefore y=10x-1+\frac{3x-9}{20}.$$

Transpose, $y-10x+1=\frac{3(x-3)}{20}.$

Let $\frac{x-3}{20}=m.$

Then $x-3=20m.$
$\therefore x=20m+3.$

Substitute value of x in (1),

$$4060m+609-20y=29,$$
$$20y=-4060m-580 \quad (2)$$
$$\therefore y=203m+29 \quad (3)$$

If $m=2,\ x=43,\ y=435.$
Hence, the number is 301.

20. In how many ways may 100 be divided into two parts, one of which shall be a multiple of 7 and the other of 9?

Let $7x$ = one part,
and $9y$ = the other part.

$$\therefore 7x+9y=100.$$
$$7x=100-9y.$$
$$\therefore x=14-y+\frac{2(1-y)}{7}.$$

Let $\frac{1-y}{7}=m.$

Then $1-y=7m.$
$\therefore y=1-7m.$

Substitute value of y in the original equation,

$$7x+9(1-7m)=100,$$
$$7x=100-9(1-7m)$$
$$7x=91+63m.$$
$$\therefore x=13+9m.$$

If $m=0,\quad x=13,\ y=1.$
If $m=-1,\ x=4,\quad y=8.$
Hence, the parts are 91 and 9, or 28 and 72.

21. Solve $18x - 5y = 70$ so that y may be a multiple of x, and both positive.

$$18x - 5y = 70.$$

Let $y = mx.$

Substitute value of y in this equation,

$$18x - 5mx = 70.$$

$$x(18 - 5m) = 70.$$

$$\therefore x = \frac{70}{18 - 5m}$$

and $$y = \frac{70m}{18 - 5m}.$$

Now, if $m = 2$, $x = \frac{70}{8}$ or $8\frac{3}{4}$,

and $y = 1\frac{1}{8}\frac{0}{}$ or $17\frac{1}{2}$.

And, if $m = 3$, $x = \frac{70}{3}$ or $23\frac{1}{3}$,

and $y = 2\frac{1}{3}\frac{0}{}$ or 70.

22. Solve $8x + 12y = 23$ so that x and y may be positive, and their sum an integer.

$$8x + 12y = 23 \qquad (1)$$

Let $x + y = m.$

Transpose, $x = m - y \qquad (2)$

Substitute value of x in (1),

$$8m - 8y + 12y = 23,$$

$$4y = 23 - 8m.$$

$$\therefore y = \frac{23 - 8m}{4}.$$

Substitute value of y in (1),

$$8x + 69 - 24m = 23,$$

$$8x = 24m - 46.$$

$$\therefore x = \frac{24m - 46}{8}.$$

Let $m = 2.$

Then $$x = \frac{48 - 46}{8} = \frac{1}{4},$$

and $$y = \frac{23 - 16}{4} = \frac{7}{4}$$

23. Divide 70 into three parts which shall give integral quotients when divided by 6, 7, 8, respectively, and the sum of the quotients shall be 10.

Let x = first part,

y = second part,

and $70 - x - y$ = third part.

$$\frac{x}{6} + \frac{y}{7} + \frac{70 - x - y}{8} = 10 \qquad (1)$$

Simplify,

$$24x + 24y + 1470 - 21x - 21y = 1680,$$

$$7x + 3y = 210 \qquad (2)$$

$$3y = 210 - 7x.$$

$$\therefore y = 70 - 2x - \frac{x}{3}.$$

Let $\frac{x}{3} = m.$

$$\therefore x = 3m.$$

Substitute value of m in (2),

$$21m + 3y = 210,$$

$$3y = 210 - 21m.$$

$$\therefore y = 70 - 7m.$$

If $m = 2, 4, 6, 8,$

(the lowest values that will produce multiples of the numbers),

$x = 6, 12, 18, 24,$

$y = 56, 42, 28, 14,$

$70 - x - y = 8, 16, 24, 32.$

24. Divide 200 into three parts which shall give integral quotients when divided by 5, 7, 11, respectively, and the sum of the quotients shall be 20.

Let x = first part,

and y = second part.

Then $200 - x - y$ = third part,

$$\frac{x}{5} + \frac{y}{7} + \frac{200 - x - y}{11} = 20.$$

Simplify,

$$77x + 55y + 7000 - 35x - 35y = 7700,$$

$$42x + 20y = 700,$$

$$21x + 10y = 350 \qquad (1)$$

$$\therefore y = 35 - 2x - \frac{x}{10}.$$

Let $\frac{x}{10} = m,$

$$x = 10m.$$

Substitute value of x in (1), $y = 35 - 21m.$

If $m = 1,$ $x = 10,$ $y = 14.$

$200 - x - y = 176.$

25. A number consisting of three digits, of which the middle one is 4, has the digits in the units' and hundreds' places interchanged by adding 792. Find the number.

Let x = digit in hundreds' place,
and y = digit in units' place.
$\therefore 100x + 40 + y$ = the number.
$100y + 40 + x = 792 + 100x + 40 + y.$
Transpose and combine,
$99y - 99x = 792.$
Divide by 99, $y - x = 8$ (1)
$y = x + 8.$
Let $x + 8 = m,$
$x = m - 8$ (2)
and $y = m.$

From (2), m must be equal to 9, in order to make x positive.
Then $x = 1,$
$y = 9.$
Hence, the number is 149.

26. Some men earning each \$2.50 a day, and some women earning each \$1.75 a day, receive altogether for their daily wages \$44.75. Determine the number of men and the number of women.

Let x = number of men,
and y = number of women.
Then $\frac{5x}{2} + \frac{7y}{4} = \frac{179}{4},$
$10x + 7y = 179,$
$y = 25 - x + \frac{4 - 3x}{7}.$
Transpose, $y - 25 + x = \frac{4 - 3x}{7}.$
Multiply by 5, $5y - 125 + 5x = 2 - 2x + \frac{6 - x}{7}$
Let $\frac{6 - x}{7} = m,$
$x = 6 - 7m.$
Substitute $6 - 7m$ for x in the original equation,
$60 - 70m + 7y = 179,$
$7y = 119 + 70m.$
$\therefore y = 17 + 10m.$
If $m = 0, \quad x = 6, \quad y = 17.$
If $m = -1, \; x = 13, \; y = 7.$

27. A wishes to pay B a debt of £1 12*s.*, but has only half-crowns in his pocket, while B has only four-penny pieces. How may they settle the matter most simply?

Let x = number of half-crowns,

and y = number of four-penny pieces.

Then half-crowns = $30x$ pence,

and four-penny pieces = $4y$ pence.

£1 + 12*s.* = 384 pence.

But £1 + 12*s.* = $30x - 4y$.

$\therefore 30x - 4y = 384$ (1)

$4y = 30x - 384$.

$\therefore y = \frac{30x - 384}{4}$,

or $y = 7x - 96 + \frac{x}{2}$

Let $\frac{x}{2} = m$.

Then $x = 2m$.

Substitute value of x in (1),

$60m - 4y = 384$.

$\therefore y = 15m - 96$.

If $m = 7$, $x = 14$, $y = 9$.

Hence, A can give B 14 half-crowns, and receive from B 9 four-penny pieces.

28. Notice that 17 is a common factor of 323 and 527.

29. A farmer buys oxen, sheep, and hens. The whole number bought is 100, and the whole price £100. If the oxen cost £5, the sheep £1, and the hens 1 *s.* each, how many of each did he buy?

Let x = number of oxen,

and y = number of sheep.

Then $100 - x - y$ = number of hens.

$$5x + y + \frac{100 - x - y}{20} = 100 \quad (1)$$

$100x + 20y + 100 - x - y = 2000$,

$99x + 19y = 1900$ (2)

Transpose, $19y = 1900 - 99x$.

Divide by 19, $y = 100 - 5x - \frac{4x}{19}$.

Transpose, $100 - 5x - y = \frac{4x}{19}$.

Multiply by 5,

$$500 - 25x - 5y = x + \frac{x}{19}.$$

Let $\frac{x}{19} = m.$

Then $x = 19m.$

Substitute value of x in (2),

$$1881m + 19y = 1900.$$

Transpose, $19y = 1900 - 1881m,$

$$y = 100 - 99m.$$

If $m = 1,\ x = 19,\ y = 1,$

and $100 - x - y = 80.$

Hence, he buys 19 oxen, 1 sheep, and 80 hens.

30. A number of lengths 3 feet, 5 feet, and 8 feet are cut; how may 48 of them be taken so as to measure 175 feet all together?

Let $x =$ number 8 feet long,

$y =$ number 5 feet long,

and $48 - x - y =$ number 3 feet long.

$$8x + 5y + 3(48 - x - y) = 175 \qquad (1)$$

Simplify, $5x + 2y = 31.$

Transpose, $2y = 31 - 5x \qquad (2)$

$$\therefore y = 15 - 2x + \frac{1 - x}{2}.$$

Let $\frac{1 - x}{2} = m.$

Then $1 - x = 2m.$

$$\therefore x = 1 - 2m.$$

Substitute value of x in (2), $2y = 31 - 5 + 10m.$

$$y = 13 + 5m \qquad (3)$$

If $m = 0,\ -1,\ -2,$

$x = 1,\ 3,\ 5 =$ number of 8-ft. lengths,

$y = 13,\ 8,\ 3 =$ number of 5-ft. lengths,

$48 - x - y = 34,\ 37,\ 40 =$ number of 3-ft. lengths.

31. A field containing an integral number of acres less than 10 is divided into 8 lots of one size, and 7 of 4 times that size; and has also a road passing through it containing 1300 square yards. Find the size of the lots in square yards.

Let x = number of acres.

$\therefore 4840x$ = number of square yards.

y = number of square yards in 1 lot,

$8y$ = number of square yards in 8 lots,

$28y$ = number of square yards in 7 lots of second kind.

$$8y + 28y + 1300 = 4840x \qquad (1)$$

$$9y + 325 = 1210x,$$

$$9y = 1210x - 325 \qquad (2)$$

$$y = 134x - 36 + \frac{4x-1}{9},$$

$$y - 134x + 36 = \frac{4x-1}{9}.$$

Multiply by 7,

$$7y - 938x + 252 = 3x + \frac{x-7}{9}.$$

Let $\frac{x-7}{9} = m.$

Then $x - 7 = 9m.$

$\therefore x = 9m + 7.$

Substitute value of x in (2),

$$9y = 10890m + 8470 - 325,$$

$$9y = 10890m + 8145.$$

$$\therefore y = 1210m + 905.$$

If $m = 0,$

$x = 7$ = number of acres.

$y = 905$ = number of sq. yds. in 1st lot.

$4y = 3620$ = number of sq. yds. in 2d lot.

32. Two wheels are to be made, the circumference of one of which is to be a multiple of the other. What circumferences may be taken so that when the first has gone round three times and the other five, the difference in the length of rope coiled on them may be 17 feet?

Let x = circumference of the first wheel,
and y = circumference of the second wheel.
$3x - 5y = 17$, difference of length of rope coiled on them when first wheel goes round three times, and second five times.

Let $x = my$,
$3x - 5y = 17$,
$3my - 5y = 17$,
$y(3m - 5) = 17$.
$\therefore y = \frac{17}{3m-5}$

If $m = 2$, $y = 17$, $x = 34$.

33. In how many ways can a person pay a sum of £15 in half-crowns, shillings, and sixpences, so that the number of shillings and sixpences together shall be equal to the number of half-crowns?

Let x = number of shillings,
and y = number of sixpences.
Then $x + y$ = number of half-crowns.
y sixpences = $\frac{1}{2}y$ shillings.
$(x + y)$ half-crowns = $\frac{5}{2}(x + y)$ shillings.
Then $x + \frac{1}{2}y + \frac{5}{2}(x + y)$ = whole number of shillings.
But 300 = whole number of shillings.
$\therefore x + \frac{1}{2}y + \frac{5}{2}(x + y) = 300$.
$2x + y + 5x + 5y = 600$,
$7x + 6y = 600$.
$x = 85 + \frac{5 - 6y}{7}$.

Transpose, and multiply by 6,
$6x - 510 = 4 - 5y + \frac{2-y}{7}$.

Let $\frac{2-y}{7} = m$.
$\therefore y = 2 - 7m$.

Substitute value of y,
$7x + 12 - 42m = 600$.
$\therefore x = 6m + 84$.

If $m = 0, -2, -2, -3, -4, -5, -6, -7, -8, -9, -10, -11, -12, -13$, then x and y would each have 14 positive values.
Hence, there are 14 ways.

Exercise 71.

1.

$a^2 + 3b^2$ is $> 2b(a + b)$.

If $a^2 + 3b^2$ is $> 2ab + 2b^2$,

if (transposing), $a^2 + b^2$ is $> 2ab$.

But $a^2 + b^2$ is $> 2ab$.

$\therefore a^2 + 3b^2$ is $> 2b(a + b)$.

2.

$a^3b + ab^3$ is $> 2a^2b^2$.

If (dividing both sides by ab),

$a^2 + b^2$ is $> 2ab$.

But $a^2 + b^2$ is $> 2ab$.

$\therefore a^3b + ab^3$ is $> 2a^2b^2$.

3.

$(a^2 + b^2)(a^4 + b^4)$ is $> (a^3 + b^3)^2$.

If (simplifying),

$a^6 + a^4b^2 + a^2b^4 + b^6$ is $> a^6 + 2a^3b^3 + b^6$,

if (transposing), $a^4b^2 + a^2b^4$ is $> 2a^3b^3$,

if (dividing by a^2b^2), $a^2 + b^2$ is $> 2ab$.

But $a^2 + b^2$ is $> 2ab$.

$\therefore (a^2 + b^2)(a^4 + b^4)$ is $> (a^3 + b^3)^2$.

4.

$a^2b + a^2c + ab^2 + b^2c + ac^2 + bc^2$ is $> 6abc$.

$a(b^2 + c^2) + b(a^2 + c^2) + c(a^2 + b^2)$ is $> 6abc$.

Since $(b^2 + c^2)$ is $> 2bc$,

$\therefore a(b^2 + c^2)$ is $> 2abc$.

Since $(a^2 + c^2)$ is $> 2ac$,

$\therefore b(a^2 + c^2)$ is $> 2abc$.

Since $(a^2 + b^2)$ is $> 2ab$,

$\therefore c(a^2 + b^2)$ is $> 2abc$.

Therefore (by adding),

$a(a^2 + b^2) + b(a^2 + c^2) + c(a^2 + b^2)$ is $> 6abc$.

5. The sum of any fraction and its reciprocal is > 2.

Let $\frac{a}{b}$ = the fraction.

Then $\frac{b}{a}$ = the reciprocal,

and $\frac{a}{b} + \frac{b}{a}$ is > 2,

if (multiplying by ab), $a^2 + b^2$ is $> 2ab$.

But $a^2 + b^2$ is $> 2ab$.

$\therefore \frac{a}{b} + \frac{b}{a}$ is > 2.

6.

If $x^2 = a^2 + b^2$, and $y^2 = c^2 + d^2$, xy is $\not< ac + bd$, or $ad + bc$.

Now, if xy is $\not< ac + bd$,

then x^2y^2 is $\not< (ac + bd)^2$,

and (by substituting the values of x^2 and y^2),

$(a^2 + b^2)(c^2 + d^2)$ is $\not< (ac + bd)^2$,

or (simplifying),

$a^2c^2 + a^2d^2 + c^2b^2 + b^2d^2$ is $> a^2c^2 + 2abcd + b^2d^2$,

and $a^2d^2 + b^2c^2$ is $> 2abcd$.

But $a^2d^2 + b^2c^2$ is $> 2abcd$.

$\therefore xy$ is $> ac + bd$.

7.

$ab + ac + bc$ is $< (a+b-c)^2 + (a+c-b)^2 + (b+c-a)^2$,

if (by expanding and combining),

$ab + ac + bc$ is $< 3a^2 + 3b^2 + 3c^2 - 2ab - 2ac - 2bc$,

if $3ab + 3ac + 3bc$ is $< 3a^2 + 3b^2 + 3c^2$,

if $ab + ac + bc$ is $< a^2 + b^2 + c^2$.

But $2ab$ is $< a^2 + b^2$

$2ac$ is $< a^2 + c^2$

$2bc$ is $< b^2 + c^2$

$\therefore 2ab + 2ac + 2bc$ is $< 2a^2 + 2b^2 + 2c^2$

or $ab + ac + bc$ is $< a^2 + b^2 + c^2$.

$\therefore ab + ac + bc$ is $< (a+b-c)^2 + (a+c-b)^2 + (b+c-a)^2$.

8. Which is the greater,

$$(a^2 + b^2)(c^2 + d^2) \text{ or } (ac + bd)^2?$$

Now, $a^2c^2 + b^2c^2 + a^2d^2 + b^2d^2$ is $> a^2c^2 + 2abcd + b^2d^2$,

if $b^2c^2 + a^2d^2$ is $> 2abcd$.

But $b^2c^2 + a^2d^2$ is $> 2abcd$.

$\therefore (a^2 + b^2)(c^2 + d^2)$ is $> (ac + bd)^2$.

9. Which is the greater,

$$a^4 - b^4 \text{ or } 4a^3(a - b), \text{ when } a \text{ is } > b?$$

$4a^3(a - b)$ is $>$ or $< a^4 - b^4$,

as (dividing by $a - b$), $4a^3$ is $>$ or $< a^3 + a^2b + ab^2 + b^3$,

as (subtracting a^3 from both sides),

$3a^3$ is $>$ or $< a^2b + ab^2 + b^3$,

as (transposing a^2b), $3a^3 - a^2b$ is $>$ or $< ab^2 + b^3$,

as $a^2(3a - b)$ is $>$ or $< b^2(a + b)$,

if the factor a^2 be taken out from the left side, and the factor b^2 from the right side, since a is $> b$, the left side will have been divided by a greater number than the right; so that, if the left is greater than the right, after both factors have been taken out, it must have been greater before.

If, therefore, $3a - b$ is $> a + b$,

if (by adding $b - a$ to both sides),

$2a$ is $> 2b$,

But $2a$ is $> 2b$.

$\therefore 4a^3(a - b)$ is $> a^4 - b^4$.

10. Which is the greater,

$$\sqrt{\frac{a^2}{b}}+\sqrt{\frac{b^2}{a}} \text{ or } \sqrt{a}+\sqrt{b}?$$

$$\sqrt{\frac{a^2}{b}}+\sqrt{\frac{b^2}{a}} \text{ is } > \text{or} < \sqrt{a}+\sqrt{b},$$

as (squaring), $\quad \frac{a^2}{b}+\sqrt{2ab}+\frac{b^2}{a} \text{ is } > \text{or} < a+\sqrt{2ab}+b,$

as (transposing), $\quad \frac{a^2}{b}+\frac{b^2}{a} \text{ is } > \text{or} < a+b,$

as (multiplying by ab), $\quad a^3+b^3 \text{ is } > \text{or} < a^2b+ab^2,$

as $\quad (a+b)(a^2-ab+b^2) \text{ is } > \text{or} < ab(a+b),$

as $\quad (a^2+b^2) \text{ is } > \text{or} < 2ab.$

But $\quad (a^2+b^2) \text{ is } > 2ab,$

$$\therefore \sqrt{\frac{a^2}{b}}+\sqrt{\frac{b^2}{a}} \text{ is } > \sqrt{a}+\sqrt{b}.$$

11. Which is the greater,

$$\frac{a+b}{2} \text{ or } \frac{2ab}{a+b}?$$

$$\frac{a+b}{2} \text{ is } > \text{or} < \frac{2ab}{a+b},$$

as $\quad a^2+2ab+b^2 \text{ is } > \text{or} < 4ab,$

as $\quad a^2+b^2 \text{ is } > \text{or} < 2ab.$

But $\quad a^2+b^2 \text{ is } > 2ab,$

$$\therefore \frac{a+b}{2} \text{ is } > \frac{2ab}{a+b}.$$

12. Which is the greater,

$$\frac{a}{b^2}+\frac{b}{a^2} \text{ or } \frac{1}{b}+\frac{1}{a}?$$

$$\frac{a}{b^2}+\frac{b}{a^2} \text{ is } > \text{or} < \frac{1}{b}+\frac{1}{a},$$

as $\quad a^3+b^3 \text{ is } > \text{or} < a^2b+ab^2,$

as $\quad (a+b)(a^2-ab+b^2) \text{ is } > \text{or} < (a+b)ab,$

as $\quad a^2+b^2 \text{ is } > \text{or} < 2ab.$

But $\quad a^2+b^2 \text{ is } > 2ab,$

$$\therefore \frac{a}{b^2}+\frac{b}{a^2} \text{ is } > \frac{1}{b}+\frac{1}{a}$$

EXERCISE 72.

1. $(a^3)^2$
$= a^{3\times 2}$
$= a^6$.

2. $(x^5)^3$
$= x^{5\times 3}$
$= x^{15}$.

3. $(x^2y^3)^2$
$= x^{2\times 2}y^{3\times 2}$
$= x^4y^6$.

4. $\left(\frac{a^3b^2}{2}\right)^4$
$= \frac{a^{3\times 4}b^{2\times 4}}{2^4}$
$= \frac{a^{12}b^8}{16}$.

5. $\left(\frac{3x^2y}{2a^3b^2}\right)^5$
$= \frac{3^5x^{2\times 5}y^5}{2^5a^{3\times 5}b^{2\times 5}}$
$= \frac{243x^{10}y^5}{32a^{15}b^{10}}$.

6. $(x+2)^3$
$= (x)^3 + 3(x)^2(2) + 3(x)(2)^2 + (2)^3$
$= x^3 + 6x^2 + 12x + 8$.

7. $(x-2)^4$
$= x^4 - 4(x)^3(2) + 6(x)^2(2)^2 - 4(x)(2)^3 + 2^4$
$= x^4 - 8x^3 + 24x^2 - 32x + 16$.

8. $(x+3)^5$
$= (x)^5 + 5(x)^4(3) + 10(x)^3(3)^2 + 10(x)^2(3)^3 + 5(x)(3)^4 + (3)^5$
$= x^5 + 15x^4 + 90x^3 + 270x^2 + 405x + 243$.

9. $(1+2x)^5$
$= 1^5 + 5(2x) + 10(2x)^2 + 10(2x)^3 + 5(2x)^4 + (2x)^5$
$= 1 + 10x + 40x^2 + 80x^3 + 80x^4 + 32x^5$.

10. $(2m-1)^3$
$= (2m)^3 - 3(2m)^2 + 3(2m) - (1)^3$
$= 8m^3 - 12m^2 + 6m - 1$.

11. $(2a^2bc^3)^4$
$= 2^4a^{2\times 4}b^4c^{3\times 4}$
$= 16a^8b^4c^{12}$.

12. $(-5ax^3y^2)^3$
$= -5^3a^3x^{3\times 3}y^{2\times 3}$
$= -125a^3x^9y^6$.

13. $(-7m^3nx^2y^4)^2$
$= -7^2m^{3\times 2}n^2x^{2\times 2}y^{4\times 2}$
$= 49m^6n^2x^4y^8$.

14. $\left(-\frac{2x^3y}{3abc}\right)^5$
$= -\frac{2^5x^{3\times 5}y^5}{3^5a^5b^5c^5}$
$= -\frac{32x^{15}y^5}{243a^5b^5c^5}$.

15. $(3x+1)^4$
$= (3x)^4 + 4(3x)^3 + 6(3x)^2 + 4(3x) + 1$
$= 81x^4 + 108x^3 + 54x^2 + 12x + 1$.

16. $(2x-a)^4$
$= (2x)^4 - 4(2x)^3(a) + 6(2x)^2(a)^2 - 4(2x)(a)^3 + (a)^4$
$= 16x^4 - 32ax^3 + 24a^2x^2 - 8a^3x + a^4$.

17. $(3x+2a)^5$
$= (3x)^5 + 5(3x)^4(2a) + 10(3x)^3(2a)^2$
$\quad + 10(3x)^2(2a)^3 + 5(3x)(2a)^4 + (2a)^5$
$= 243x^5 + 810ax^4 + 1080a^2x^3 + 720a^3x^2 + 240a^4x + 32a^5$.

18. $(2x-y)^4$
$= (2x)^4 - 4(2x)^3(y) + 6(2x)^2(y)^2 - 4(2x)(y)^3 + (y)^4$
$= 16x^4 - 32x^3y + 24x^2y^2 - 8xy^3 + y^4.$

19. $(x^2y - 2xy^2)^6$
$= (x^2y)^6 - 6(x^2y)^5(2xy^2) + 15(x^2y)^4(2xy^2)^2 - 20(x^2y)^3(2xy^2)^3$
$\quad + 15(x^2y)^2(2xy^2)^4 - 6(x^2y)(2xy^2)^5 + (2xy^2)^6$
$= x^{12}y^6 - 12x^{11}y^7 + 60x^{10}y^8 - 160x^9y^9 + 240x^8y^{10}$
$\quad - 192x^7y^{11} + 64x^6y^{12}.$

20. $(ab-3)^7$
$= (ab)^7 - 7(ab)^6(3) + 21(ab)^5(3)^2 - 35(ab)^4(3)^3$
$\quad + 35(ab)^3(3)^4 - 21(ab)^2(3)^5 + 7(ab)(3)^6 - (3)^7$
$= a^7b^7 - 21a^6b^6 + 189a^5b^5 - 945a^4b^4$
$\quad + 2835a^3b^3 - 5103a^2b^2 + 5103ab - 2187.$

21. $(-3a^2b^2c)^5$
$= -3^5a^{2\times5}b^{2\times5}c^5$
$= -243a^{10}b^{10}c^5.$

22. $(-3xy^3)^6$
$= -3^6x^6y^{3\times6}$
$= 729x^6y^{18}.$

23. $(-5a^2bx^3)^5$
$= -5^5a^{2\times5}b^5x^{3\times5}$
$= -3125a^{10}b^5x^{15}.$

24. $\left(-\dfrac{3ab^2}{4c^3}\right)^4$
$= \dfrac{81a^4b^8}{256c^{12}}.$

25. $\left(-\dfrac{x^2y^3z^4}{2}\right)^7$
$= -\dfrac{x^{2\times7}y^{3\times7}z^{4\times7}}{2^7}$
$= -\dfrac{x^{14}y^{21}z^{28}}{128}.$

26. $(1-a-a^2)^2$
$= \{1-(a+a^2)\}^2$
$= 1^2 - 2(a+a^2) + (a+a^2)^2$
$= 1 - 2a - 2a^2 + a^2 + 2a^3 + a^4$
$= 1 - 2a - a^2 + 2a^3 + a^4.$

27. $(2-3x+4x^2)^3$
$= [2-(3x-4x^2)]^3$
$= (2)^3 - 3(2)^2(3x-4x^2) + 3(2)(3x-4x^2)^2 - (3x-4x^2)^3$
$= 8 - 36x + 48x^2 + 54x^2 - 144x^3$
$\quad + 96x^4 - 27x^3 + 108x^4 - 144x^5 + 64x^6$
$= 8 - 36x + 102x^2 - 171x^3 + 204x^4 - 144x^5 + 64x^6.$

28. $(1-2x+x^2)^3$
$= \{(1-2x) + x^2\}^3$
$= (1-2x)^3 + 3(1-2x)^2x^2 + 3(1-2x)(x^2)^2 + (x^2)^3$
$= 1 - 6x + 12x^2 - 8x^3 + 3x^2 - 12x^3 + 12x^4 + 3x^4 - 6x^5 + x^6$
$= 1 - 6x + 15x^2 - 20x^3 + 15x^4 - 6x^5 + x^6.$

29. $(1-x+x^2)^3$
$= \{1-(x-x^2)\}^3$
$= 1 - 3(x-x^2) + 3(x-x^2)^2 - (x-x^2)^3$
$= 1 - 3x + 3x^2 + 3x^2 - 6x^3 + 3x^4 - x^3 + 3x^4 - 3x^5 + x^6$
$= 1 - 3x + 6x^2 - 7x^3 + 6x^4 - 3x^5 + x^6.$

30. $(1+x+x^2)^4$
$= \{1+(x+x^2)\}^4$
$= 1^4 + 4(1)^3(x+x^2) + 6(1)^2(x+x^2)^2 + 4(1)(x+x^2)^3 + (x+x^2)^4$
$= 1 + 4x + 4x^2 + 6x^2 + 12x^3 + 6x^4 + 4x^3 + 12x^4 + 12x^5$
$\quad + 4x^6 + x^4 + 4x^5 + 6x^6 + 4x^7 + x^8$
$= 1 + 4x + 10x^2 + 16x^3 + 19x^4 + 16x^5 + 10x^6 + 4x^7 + x^8.$

EXERCISE 73.

1. $\sqrt{a^4} = \pm a^2$,
$\sqrt[4]{x^8} = \pm x^2$,
$\sqrt{4a^6b^2} = \pm 2a^3b$,
$\sqrt[3]{64} = 4$,
$\sqrt[5]{a^5x^{10}y^{15}} = ax^2y^3$,
$\sqrt[4]{16a^{12}b^4c^8} = \pm 2a^3bc^2$,
$\sqrt[5]{-32a^{15}} = -2a^3$.

2. $\sqrt[3]{-1728c^6d^{12}x^3y^9} = -12c^2d^4xy^3$,
$\sqrt[3]{3375b^{21}z^{15}} = 15b^7z^5$,
$\sqrt[4]{3111696} = \sqrt[4]{2^4 \times 3^4 \times 7^4}$,
$\sqrt[4]{2^4 \times 3^4 \times 7^4 c^{16} z^4} = \pm 42c^4z$.

3. $\sqrt{53361\,b^4c^8y^{12}z^{16}}$

3^2	53361
7	5929
7	847
11^2	121

$\sqrt{53361} = \sqrt{3^2 \times 7^2 \times 11^2}$.
$\therefore \sqrt{53361\,b^4c^8y^{12}z^{16}} = \pm 231\,b^2c^4y^6z^8$.

$\sqrt[3]{-\dfrac{216b^3c^{15}}{343z^{24}}} = -\dfrac{6bc^5}{7z^8}$,

$\sqrt[6]{\dfrac{64x^{18}}{729z^{30}}} = \pm\dfrac{2x^3}{3z^5}$.

4. $\sqrt{25a^2b^4c^2} + \sqrt[3]{8a^3b^6c^3} - \sqrt[4]{81a^4b^8c^4} - \sqrt[5]{32a^5b^{10}c^5}$
$= \sqrt{5^2a^2b^4c^2} + \sqrt[3]{2^3a^3b^6c^3} - \sqrt[4]{3^4a^4b^8c^4} - \sqrt[5]{2^5a^5b^{10}c^5}$
$= 5ab^2c + 2ab^2c - 3ab^2c - 2ab^2c$
$= 2ab^2c.$

5. $\sqrt[3]{27x^3y^6} \times \sqrt[5]{243y^5z^5} \times \sqrt{16x^4z^2}$
$= 3xy^2 \times 3yz \times 4x^2z$
$= 36x^3y^3z^2.$

6. $4\sqrt{2x} - \sqrt{abxy} + 5\sqrt{a^2b^3xy}$
$= 4\sqrt{2 \times 2} - \sqrt{1 \times 3 \times 2 \times 6} + 5\sqrt{1^2 \times 3^2 \times 2 \times 6}$
$= 4\sqrt{4} - \sqrt{36} + 5\sqrt{324}$
$= 4 \times 2 - 6 + 5 \times 18$
$= 92.$

7. $2a\sqrt{8ax} + b\sqrt[3]{12by} + 4abx\sqrt{bxy}$
$= 2 \times 1\sqrt{8 \times 1 \times 2} + 3\sqrt[3]{12 \times 3 \times 6} + 4 \times 1 \times 3 \times 2\sqrt{3 \times 2 \times 6}$
$= 2\sqrt{16} + 3\sqrt[3]{216} + 24\sqrt{36}$
$= 2 \times 4 + 3 \times 6 + 24 \times 6$
$= 170.$

8. $\sqrt{a^2+2ab+b^2}\times\sqrt[3]{a^3+3a^2b+3ab^2+b^3}$
$=(a+b)\times(a+b)$
$=(1+3)\times(1+3)$
$=16.$

9. $\sqrt[3]{b^3-3b^2a+3ba^2-a^3}+\sqrt{b^2+a^2-2ab}$
$=\sqrt[3]{(b-a)^3}+\sqrt{(b-a)^2}$
$=(b-a)+(b-a)$
$=1.$

Exercise 74.

1.

$a^4+4a^3+2a^2-4a+1 \mid a^2+2a-1$

a^4

$2a^2+2a \mid 4a^3+2a^2$
$\quad\quad 4a^3+4a^2$

$2a^2+4a-1 \mid -2a^2-4a+1$
$\quad\quad -2a^2-4a+1$

2.

$x^4-2x^3y+3x^2y^2-2xy^3+y^4 \mid x^2-xy+y^2$

x^4

$2x^2-xy \mid -2x^3y+3x^2y^2$
$\quad\quad -2x^3y+x^2y^2$

$2x^2-2xy+y^2 \mid 2x^2y^2-2xy^3+y^4$
$\quad\quad 2x^2y^2-2xy^3+y^4$

3.

$4a^6-12a^5x+5a^4x^2+6a^3x^3+a^2x^4 \mid 2a^3-3a^2x-ax^2$

$4a^6$

$4a^3-3a^2x \mid -12a^5x+5a^4x^2$
$\quad\quad -12a^5x+9a^4x^2$

$4a^3-6a^2x-ax^2 \mid -4a^4x^2+6a^3x^3+a^2x^4$
$\quad\quad -4a^4x^2+6a^3x^3+a^2x^4$

4.

$9x^6-24x^4y^2-12x^3y^3+16x^2y^4+16xy^5+4y^6 \mid 3x^3-4xy^2-2y^3$

$9x^6$

$6x^3-4xy^2 \mid -24x^4y^2-12x^3y^3+16x^2y^4$
$\quad\quad -24x^4y^2+16x^3y^4+16x^2y^4$

$6x^3-8xy^2-2y^3 \mid -12x^3y^3+16xy^5+4y^6$
$\quad\quad -12x^3y^3+16xy^5+4y^6$

5.

$$4a^8+16a^6c^2-32a^2c^6+16c^8 \mid 2a^4+4a^2c^2-4c^4$$

$$\begin{array}{l|l} 4a^8 & \\ \hline 4a^4+4a^2c^2 & 16a^6c^2-32a^2c^6 \\ & 16a^6c^2+16a^4c^4 \\ \hline 4a^4+8a^2c^2-4c^4 & -16a^4c^4-32a^2c^6+16c^8 \\ & -16a^4c^4-32a^2c^6+16c^8 \end{array}$$

6.

$$4x^4-20x^3+37x^2-30x+9 \mid 2x^2-5x+3$$

$$\begin{array}{l|l} 4x^4 & \\ \hline 4x^2-5x & -20x^3+37x^2 \\ & -20x^3+25x^2 \\ \hline 4x^2-10x+3 & 12x^2-30x+9 \\ & 12x^2-30x+9 \end{array}$$

7.

$$16x^4-16abx^2+16b^2x^2+4a^2b^2-8ab^3+4b^4 \mid 4x^2-2ab+2b^2$$

$$\begin{array}{l|l} 16x^4 & \\ \hline 8x^2-2ab & -16abx^2+16b^2x^2+4a^2b^2 \\ & -16abx^2+4a^2b^2 \\ \hline 8x^2-4ab+2b^2 & 16b^2x^2-8ab^3+4b^4 \\ & 16b^2x^2-8ab^3+4b^4 \end{array}$$

8.

$$16-24x+25x^2-20x^3+10x^4-4x^5+x^6 \mid 4-3x+2x^2-x^3$$

$$\begin{array}{l|l} 16 & \\ \hline 8-3x & -24x+25x^2 \\ & -24x+9x^2 \\ \hline 8-6x+2x^2 & 16x^2-20x^3+10x^4 \\ & 16x^2-12x^3+4x^4 \\ \hline 8-6x+4x^2-x^3 & -8x^3+6x^4-4x^5+x^6 \\ & -8x^3+6x^4-4x^5+x^6 \end{array}$$

9.

$$x^6-4x^5y+8x^4y^2-10x^3y^3+8x^2y^4-4xy^5+y^6 \mid x^3-2x^2y+2xy^2-y^3$$

$$\begin{array}{l|l} x^6 & \\ \hline 2x^3-2x^2y & -4x^5y+8x^4y^2 \\ & -4x^5y+4x^4y^2 \\ \hline 2x^3-4x^2y+2xy^2 & 4x^4y^2-10x^3y^3+8x^2y^4 \\ & 4x^4y^2-8x^3y^3+4x^2y^4 \\ \hline 2x^3-4x^2y+4xy^2-y^3 & -2x^3y^3+4x^2y^4-4xy^5+y^6 \\ & -2x^3y^3+4x^2y^4-4xy^5+y^6 \end{array}$$

10.

$$4a^6-4a^5-11a^4+14a^3+5a^2-12a+4 \mid 2a^3-a^2-3a+2$$

$$\begin{array}{l|l}
4a^6 & \\
\hline
4a^3-a^2 & -4a^5-11a^4 \\
 & -4a^5+\ \ a^4 \\
\hline
4a^3-2a^2-3a & -12a^4+14a^3+5a^2 \\
 & -12a^4+\ 6a^3+9a^2 \\
\hline
4a^3-2a^2-6a+2 & 8a^3-4a^2-12a+4 \\
 & 8a^3-4a^2-12a+4
\end{array}$$

11.

$$9a^2-6ab+b^2+30ac-10bc+25c^2+6ad-2bd+10cd+d^2 \mid 3a-b+5c+d$$

$$\begin{array}{l|l}
9a^2 & \\
\hline
6a-b & -6ab+b^2 \\
 & -6ab+b^2 \\
\hline
6a-2b+5c & 30ac-10bc+25c^2 \\
 & 30ac-10bc+25c^2 \\
\hline
6a-2b+10c+d & 6ad-2bd+10cd+d^2 \\
 & 6ad-2bd+10cd+d^2
\end{array}$$

12.

$$25x^6-30x^5y-31x^4y^2+34x^3y^3+10x^2y^4-8xy^5+y^6 \mid 5x^3-3x^2y-4xy^2+y^3$$

$$\begin{array}{l|l}
25x^6 & \\
\hline
10x^3-3x^2y & -30x^5y-31x^4y^2 \\
 & -30x^5y+\ 9x^4y^2 \\
\hline
10x^3-6x^2y-4xy^2 & -40x^4y^2+34x^3y^3+10x^2y^4 \\
 & -40x^4y^2+24x^3y^3+16x^2y^4 \\
\hline
10x^3-6x^2y-8xy^2+y^3 & 10x^3y^3-\ 6x^2y^4-8xy^5+y^6 \\
 & 10x^3y^3-\ 6x^2y^4-8xy^5+y^6
\end{array}$$

13.

$$m^8-4m^7+10m^6-20m^5+35m^4-44m^3+46m^2-40m+25 \mid m^4-2m^3+3m^2-4m+5$$

$$\begin{array}{l|l}
m^8 & \\
\hline
2m^4-2m^3 & -4m^7+10m^6 \\
 & -4m^7+\ 4m^6 \\
\hline
2m^4-4m^3+3m^2 & 6m^6-20m^5+35m^4 \\
 & 6m^6-12m^5+\ 9m^4 \\
\hline
2m^4-4m^3+6m^2-4m & -\ 8m^5+26m^4-44m^3+46m^2 \\
 & -\ 8m^5+16m^4-24m^3+16m^2 \\
\hline
2m^4-4m^3+6m^2-8m+5 & 10m^4-20m^3+30m^2-40m+25 \\
 & 10m^4-20m^3+30m^2-40m+25
\end{array}$$

14.

$$x^4 - x^3y - \tfrac{1}{4}x^2y^2 + xy^3 + y^4 \,\big|\, x^2 - \tfrac{1}{2}xy - y^2$$

$$\begin{array}{r|l} x^4 & \\ \hline 2x^2 - \tfrac{1}{2}xy & -x^3y - \tfrac{1}{4}x^2y^2 \\ & -x^3y + \tfrac{1}{4}x^2y^2 \\ \hline 2x^2 - xy - y^2 & -2x^2y^2 + xy^3 + y^4 \\ & -2x^2y^2 + xy^3 + y^4 \end{array}$$

15.

$$x^4 - 4x^3y + 6x^2y^2 - 6xy^3 + 5y^4 - \frac{2y^5}{x} + \frac{y^6}{x^2} \,\Big|\, x^2 - 2xy + y^2 - \frac{y^3}{x}$$

$$\begin{array}{r|l} x^4 & \\ \hline 2x^2 - 2xy & -4x^3y + 6x^2y^2 \\ & -4x^3y + 4x^2y^2 \\ \hline 2x^2 - 4xy + y^2 & 2x^2y^2 - 6xy^3 + 5y^4 \\ & 2x^2y^2 - 4xy^3 + y^4 \\ \hline 2x^2 - 4xy + 2y^2 - \frac{y^3}{x} & -2xy^3 + 4y^4 - \frac{2y^5}{x} + \frac{y^6}{x^2} \\ & -2xy^3 + 4y^4 - \frac{2y^5}{x} + \frac{y^6}{x^2} \end{array}$$

16.

$$\frac{a^4}{9} - \frac{a^3x}{2} + \frac{43a^2x^2}{48} - \frac{3ax^3}{4} + \frac{x^4}{4} \,\Big|\, \frac{a^2}{3} - \frac{3ax}{4} + \frac{x^2}{2}$$

$$\begin{array}{r|l} \frac{a^4}{9} & \\ \hline \frac{2a^2}{3} - \frac{3ax}{4} & -\frac{a^3x}{2} + \frac{43a^2x^2}{48} \\ & -\frac{a^3x}{2} + \frac{27a^2x^2}{48} \\ \hline 2\left(\frac{a^2}{3} - \frac{3ax}{4}\right) + \frac{x^2}{2} & \frac{a^2x^2}{3} - \frac{3ax^3}{4} + \frac{x^4}{4} \\ & \frac{a^2x^2}{3} - \frac{3ax^3}{4} + \frac{x^4}{4} \end{array}$$

17.

$$1+\frac{4}{x}+\frac{10}{x^2}+\frac{20}{x^3}+\frac{25}{x^4}+\frac{24}{x^5}+\frac{16}{x^6}\Big|\underline{1+\frac{2}{x}+\frac{3}{x^2}+\frac{4}{x^3}}$$

$$\begin{array}{l|l}1 & \\ \hline 2+\frac{2}{x} & \frac{4}{x}+\frac{10}{x^2} \\ & \frac{4}{x}+\frac{4}{x^2} \\ \hline 2+\frac{4}{x}+\frac{3}{x^2} & \frac{6}{x^2}+\frac{20}{x^3}+\frac{25}{x^4} \\ & \frac{6}{x^2}+\frac{12}{x^3}+\frac{9}{x^4} \\ \hline 2+\frac{4}{x}+\frac{6}{x^2}+\frac{4}{x^3} & \frac{8}{x^3}+\frac{16}{x^4}+\frac{24}{x^5}+\frac{16}{x^6} \\ & \frac{8}{x^3}+\frac{16}{x^4}+\frac{24}{x^5}+\frac{16}{x^6} \\ \hline \end{array}$$

18.

$$\frac{a^2}{b^2}-\frac{2a}{b}+3-\frac{2b}{a}+\frac{b^2}{a^2}\Big|\underline{\frac{a}{b}-1+\frac{b}{a}}$$

$$\begin{array}{l|l}\frac{a^2}{b^2} & \\ \hline \frac{2a}{b}-1 & -\frac{2a}{b}+3 \\ & -\frac{2a}{b}+1 \\ \hline \frac{2a}{b}-2+\frac{b}{a} & 2-\frac{2b}{a}+\frac{b^2}{a^2} \\ & 2-\frac{2b}{a}+\frac{b^2}{a^2} \\ \hline \end{array}$$

19.

$$x^4+x^3-\frac{5x^2}{12}-\frac{x}{3}+\frac{1}{9}\Big|\underline{x^2+\frac{x}{2}-\frac{1}{3}}$$

$$\begin{array}{l|l}\frac{x^4}{x^2} & \\ \hline 2x^2+\frac{x}{2} & x^3-\frac{5x^2}{12} \\ & x^3+\frac{x^2}{4} \\ \hline 2x^2+x-\frac{1}{3} & -\frac{2x^2}{3}-\frac{x}{3}+\frac{1}{9} \\ & -\frac{2x^2}{3}-\frac{x}{3}+\frac{1}{9} \\ \hline \end{array}$$

Exercise 75.

1.

(1)
```
     1.2̇0.4̇0.9̇(347
     9
  64)304
     256
 687)4809
     4809
```

(2)
```
     4.8̇1.6̇.3.6̇(69.4
     36
 129)1216
     1161
1384) 5536
      5536
```

(3)
```
     1.8̇6.7̇.1̇0.4̇1̇(43.21
     16
  83)267
     249
 862)1810
     1724
8641) 8641
      8641
```

(4)
```
     1.4̇3.5̇.6.5̇2̇1̇(37.89
     9
  67)535
     469
 748)6665
     5984
7569)68121
     68121
```

(5)
```
     6.4̇.1.2̇8.0̇6.4̇(8.008
     64
16008)128064
      128064
```

2.

(1)
```
     1̇6.8̇0.3̇.9.3̇6.9̇(129.63
     1
  22)68
     44
 249)2403
     2241
2586)16293
     15516
25923)77769
      77769
```

(2)
```
     4̇.5.4̇4.9̇9.7̇6.1̇(2.1319
     4
  41) 54
      41
 423)1349
     1269
4261)8097
     4261
42629)383661
      383661
```

(3)
```
     0.2.4̇3.7̇3.9̇6.9̇(0.4937
     16
  89)837
     801
 983)3639
     2949
9867)69069
     69069
```

(4)
```
     0.5.6̇8.7̇5.7̇3.0̇5.6̇(0.75416
     49
 145)787
     725
1504)6257
     6016
15081)24130
      15081
150826)904956
       904956
```

3.

(1)

$$
\begin{array}{r}
0.9\dot{0}0\dot{0}0\dot{0}0\dot{0}0\dot{0}(0.94868 \\
81 \\
184\overline{)900} \\
736 \\
1888\overline{)16400} \\
15104 \\
18966\overline{)129600} \\
113796 \\
189728\overline{)1580400} \\
\underline{1517824}
\end{array}
$$

(2)

$$
\begin{array}{r}
\dot{6}.2\dot{1}(\dot{2}.4919 \\
4 \\
44\overline{)221} \\
176 \\
489\overline{)4500} \\
4401 \\
4981\overline{)9900} \\
4981 \\
49829\overline{)491900} \\
\underline{448461}
\end{array}
$$

(3)

$$
\begin{array}{r}
0.4\dot{3}(0.6557 \\
36 \\
125\overline{)700} \\
\dot{6}25 \\
1305\overline{)7500} \\
6525 \\
13107\overline{)97500} \\
\underline{91749}
\end{array}
$$

(4)

$$
\begin{array}{r}
0.0\dot{0}8\dot{5}2\dot{0}(0.0923 \\
81 \\
182\overline{)420} \\
364 \\
1843\overline{)5600} \\
\underline{5529}
\end{array}
$$

(5)

$$
\begin{array}{r}
1\dot{7}.0\dot{0}(4.1231 \\
16 \\
81\overline{)100} \\
81 \\
822\overline{)1900} \\
1644 \\
8243\overline{)25600} \\
24729 \\
82461\overline{)87100} \\
\underline{82461}
\end{array}
$$

(6)

$$
\begin{array}{r}
\dot{1}2\dot{9}.0\dot{0}0\dot{0}0\dot{0}0\dot{0}(11.3578 \\
1 \\
21\overline{)29} \\
21 \\
223\overline{)800} \\
669 \\
2265\overline{)13100} \\
11325 \\
22707\overline{)177500} \\
158949 \\
227148\overline{)1855100} \\
\underline{1817184}
\end{array}
$$

(7)

$$
\begin{array}{r}
\dot{3}4\dot{7}.2\dot{5}9\dot{0}(18.6348 \\
1 \\
28\overline{)247} \\
224 \\
366\overline{)2325} \\
2196 \\
3723\overline{)12990} \\
11169 \\
37264\overline{)182100} \\
149056 \\
372688\overline{)3304400} \\
\underline{2981504}
\end{array}
$$

4.

(1) 14295.3870 (119.5633
1
21)42
21
229)2195
2061
2385)13438
11925
23906)151370
143436
239123)793400
717369
2391263)7603100
7173789

(2) 2.5000 (1.5811
1
25)150
125
308)2500
2464
3161)3600
3161
31621)43900
31621

(3) 2000 (44.721
16
84)400
336
887)6400
6209
8942)19100
17884
89441)121600
89441

(4) 0.3000000 (0.5477
25
104)500
416
1087)8400
7609
10947)79100
76629

(5) 0.030000 (0.1732
1
27)200
189
343)1100
1029
3462)7100
6924

(6) 11 (10.5356
1
205)1100
1025
2103)7500
6309
21065)119100
105325
210706)1377500
1264236

5.

(1) 0.0111 (0.0333
9
63)210
189
663)2100
1989

(2) 0.040000 (0.0632
36
123)400
369
1262)3100
2524

(3) 0.050 (0.07071
49
1407)10000
9849
14141)15100
14141

(4)
$$\begin{array}{r|l} \dot{2}.0\dot{0}0\dot{0}0\dot{0}0\dot{0} & 1.4142 \\ 1 & \\ \hline 24 & 100 \\ 96 & \\ \hline 281 & 400 \\ 281 & \\ \hline 2824 & 11900 \\ 11296 & \\ \hline 28282 & 60400 \\ 56564 & \\ \hline \end{array}$$

(5)
$$\begin{array}{r|l} \dot{5}.0\dot{0} & 2.236 \\ 4 & \\ \hline 42 & 100 \\ 84 & \\ \hline 443 & 1600 \\ 1329 & \\ \hline 4466 & 27100 \\ 26796 & \\ \hline \end{array}$$

(6)
$$\begin{array}{r|l} \dot{3}.2\dot{5} & 1.8027 \\ 1 & \\ \hline 28 & 225 \\ 224 & \\ \hline 3602 & 10000 \\ 7204 & \\ \hline 36047 & 279600 \\ 252329 & \\ \hline \end{array}$$

(7)
$$\begin{array}{r|l} \dot{8}.6\dot{0}0\dot{0}0\dot{0} & 2.932 \\ 4 & \\ \hline 49 & 460 \\ 441 & \\ \hline 583 & 1900 \\ 1749 & \\ \hline 5862 & 15100 \\ 11724 & \\ \hline \end{array}$$

6.

(1) $\sqrt{\frac{1}{4}} = \frac{1}{2}$.

(2) $\sqrt{\frac{16}{49}} = \frac{4}{7}$.

(3) $\sqrt{\frac{100}{144}} = \frac{10}{12}$.

(4) $\sqrt{\frac{169}{225}} = \frac{13}{15}$.

$\sqrt{\frac{289}{324}} = \frac{17}{18}$.

$\sqrt{\frac{400}{625}} = \frac{20}{25}$.

7.

(1) $\frac{1}{2} = 0.5$.
$$\begin{array}{r|l} 0.5\dot{0} & 0.7071 \\ 49 & \\ \hline 1407 & 10000 \\ 9849 & \\ \hline 14141 & 15100 \\ 14141 & \\ \hline \end{array}$$

(2) $\frac{2}{3} = 0.666666.$
$$\begin{array}{r|l} 0.666\dot{6}\dot{6} & 0.816 \\ 64 & \\ \hline 161 & 266 \\ 161 & \\ \hline 1626 & 10566 \\ 9756 & \\ \hline \end{array}$$

(3) $\frac{3}{4} = 0.75$.
$$\begin{array}{r|l} 0.75\dot{0}0\dot{0}\dot{0} & 0.8660 \\ 64 & \\ \hline 166 & 1100 \\ 996 & \\ \hline 1726 & 10400 \\ 10356 & \\ \hline 1732 & 4400 \end{array}$$

(4) $\frac{1}{32} = 0.03125$.
$$\begin{array}{r|l} 0.031\dot{2}5\dot{0} & 0.1767 \\ 1 & \\ \hline 27 & 212 \\ 189 & \\ \hline 346 & 2350 \\ 2076 & \\ \hline 3527 & 27400 \\ 24689 & \\ \hline \end{array}$$

(5) $\frac{7}{128} = 0.0546875.$

$$
\begin{array}{r}
0.0\dot{5}4\dot{6}8\dot{7}5\dot{0}\,(0.2338 \\
\underline{4} \\
43)\,146 \\
\underline{129} \\
463)\,1787 \\
\underline{1389} \\
4668)\,39850 \\
\underline{37344}
\end{array}
$$

(6) $\frac{6}{125} = 0.048.$

$$
\begin{array}{r}
0.0\dot{4}8\dot{0}\,(0.2190 \\
\underline{4} \\
41)\,80 \\
\underline{41} \\
429)\,3900 \\
\underline{3861}
\end{array}
$$

(7) $\frac{6}{7} = 0.857142.$

$$
\begin{array}{r}
0.8\dot{5}7\dot{1}4\dot{2}\,(0.9258 \\
\underline{81} \\
182)\,471 \\
\underline{364} \\
1845)\,10742 \\
\underline{9225} \\
18508)\,151700 \\
\underline{148064}
\end{array}
$$

(8) $\frac{1}{12} = 0.08333333.$

$$
\begin{array}{r}
0.0\dot{8}3\dot{3}3\dot{3}3\dot{3}\,(0.2886 \\
\underline{4} \\
48)\,433 \\
\underline{384} \\
568)\,4933 \\
\underline{4544} \\
5766)\,38933 \\
\underline{34596}
\end{array}
$$

Exercise 76.

1.

$$
\begin{array}{rr|l}
 & & x^3 + 6x^2y + 12xy^2 + 8y^3 \;\underline{|\, x + 2y} \\
 & & \underline{x^3} \\
 & 3x^2 & 6x^2y + 12xy^2 + 8y^3 \\
(3x + 2y)2y = & \underline{6xy + 4y^2} & \underline{6x^2y + 12xy^2 + 8y^3} \\
 & 3x^2 + 6xy + 4y^2 &
\end{array}
$$

2.

$$
\begin{array}{rr|l}
 & & a^3 - 9a^2 + 27a - 27 \;\underline{|\, a - 3} \\
 & & \underline{a^3} \\
 & 3a^2 & -9a^2 + 27a - 27 \\
-3(3a - 3) = & \underline{-9a + 9} & \underline{-9a^2 + 27a - 27} \\
 & 3a^2 - 9a + 9 &
\end{array}
$$

3.

$$
\begin{array}{rr|l}
 & & x^3 + 12x^2 + 48x + 64 \;\underline{|\, x + 4} \\
 & & \underline{x^3} \\
 & 3x^2 & 12x^2 + 48x + 64 \\
(3x + 4)4 = & \underline{12x + 16} & \underline{12x^2 + 48x + 64} \\
 & 3x^2 + 12x + 16 &
\end{array}
$$

4.

$$x^6-3ax^5+5a^2x^3-3a^5x-a^6 \mid \underline{x^2-ax-a^2}$$

$$\begin{array}{r|l} x^6 & \\ \hline 3x^4 & -3ax^5+5a^2x^3-3a^5x \\ \hline 3x^4-3ax^3+a^2x^2 & -3ax^5+3a^2x^4-a^3x^3 \end{array}$$

$(3x^2-ax)(-ax) =$

$$\begin{array}{r|l} 3(x^2-ax)^2 = 3x^4-6ax^3+3a^2x^2 & -3a^2x^4+6a^3x^3-3a^5x-a^6 \\ (3x^2-3ax-a^2)(-a^2) = \quad -3a^2x^2+3a^3x+a^4 & \\ \hline 3x^4-6ax^3 \quad +3a^3x+a^4 & \underline{-3a^2x^4+6a^3x^3-3a^5x-a^6} \end{array}$$

5.

$$x^6+3x^5+6x^4+7x^3+6x^2+3x+1 \mid \underline{x^2+x+1}$$

$$\begin{array}{r|l} x^6 & \\ \hline 3x^4 & 3x^5+6x^4+7x^3 \\ \quad +3x^3+x^2 & \\ \hline 3x^4+3x^3+x^2 & 3x^5+3x^4+\ x^3 \end{array}$$

$(3x^2+x)x =$

$$\begin{array}{r|l} 3(x^2+x)^2 = 3x^4+6x^3+3x^2 & 3x^4+6x^3+6x^2+3x+1 \\ (3x^2+3x+1)(1) = \quad 3x^2+3x+1 & 3x^4+6x^3+6x^2+3x+1 \\ \hline 3x^4+6x^3+6x^2+3x+1 & \end{array}$$

6.

$$\underline{\mid 1-3x+4x^2}$$

$$1-9x+39x^2-99x^3+156x^4-144x^5+64x^6$$

$$\begin{array}{r|l} 1 & \\ \hline 3 & -9x+39x^2-99x^3 \\ \quad -9x+9x^2 & \\ \hline 3-9x+9x^2 & -9x+27x^2-27x^3 \end{array}$$

$$\begin{array}{r|l} 3-18x+27x^2 & 12x^2-72x^3+156x^4-144x^5+64x^6 \\ \quad 12x^2-36x^3+16x^4 & \\ \hline 3-18x+39x^2-36x^3+16x^4 & \underline{12x^2-72x^3+156x^4-144x^5+64x^6} \end{array}$$

7.

$$\underline{\mid a^2-2a-1}$$

$$a^6-6a^5+\ 9a^4+4a^3-9a^2-6a-1$$

$$\begin{array}{r|l} a^6 & \\ \hline 3a^4 & -6a^5+\ 9a^4+4a^3 \\ \quad -6a^3+4a^2 & \\ \hline 3a^4-6a^3+4a^2 & -6a^5+12a^4-8a^3 \end{array}$$

$(3a^2-2a)(-2a) =$

$$\begin{array}{r|l} 3(a^2-2a)^2 = 3a^4-12a^3+12a^2 & -3a^4+12a^3-9a^2-6a-1 \\ (3a^2-6a-1)(-1) = \quad -3a^2+6a+1 & -3a^4+12a^3-9a^2-6a-1 \\ \hline 3a^4-12a^3+\ 9a^2+6a+1 & \end{array}$$

8.

$64x^6+192x^5+144x^4-32x^3-36x^2+12x-1 \mid 4x^2+4x-1$

$64x^6$

$(12x^2+4x)4x = 48x^4 \mid 192x^5+144x^4-32x^3$

$48x^4+48x^3+16x^2 \mid 192x^5+192x^4+64x^3$

$3(4x^2+4x)^2 = 48x^4+96x^3+48x^2 \mid -48x^4-96x^3-36x^2+12x-1$

$(12x^2+12x-1)(-1) = -12x^2-12x+1$

$48x^4+96x^3+36x^2-12x+1 \mid -48x^4-96x^3-36x^2+12x-1$

9.

$1-3x+6x^2-10x^3+12x^4-12x^5+10x^6-6x^7+3x^8-x^9 \mid 1-x+x^2-x^3$

1

$3 \mid -3x+6x^3-10x^3$

$-3x+x^2$

$3-3x+x^2 \mid -3x+3x^2-x^3$

$3-6x+3x^2 \mid 3x^2-9x^3+12x^4-12x^5+10x^6$

$3x^2-3x^3+x^4 \mid 3x^2-6x^3+6x^4-3x^5+x^6$

$3-6x+6x^2-3x^3+x^4 \mid -3x^3+6x^4-9x^5+9x^6-6x^7+3x^8-x^9$

$3-6x+9x^2-6x^3+3x^4$

$-3x^3+3x^4-3x^5+x^6$

$3-6x+9x^2-9x^3+6x^4-3x^5+x^6 \mid -3x^3+6x^4-9x^5+9x^6-6x^7+3x^8-x^9$

10.

$a^6+9a^5b-135a^3b^3+729ab^5-729b^6 \mid a^2+3ab-9b^2$

a^6

$3a^4 \mid 9a^5b-135a^3b^3+729ab^5$

$9a^3b+9a^2b^2$

$3a^4+9a^3b+9a^2b^2 \mid 9a^5b+27a^4b^2+27a^3b^3$

$3a^4+18a^3b+27a^2b^2 \mid -27a^4b^2-162a^3b^3+729ab^5-729b^6$

$-27a^2b^2-81ab^3+81b^4$

$3a^4+18a^3b \quad -81ab^3+81b^4 \mid -27a^4b^2-162a^3b^3+729ab^5-729b^6$

11.

$c^6-12bc^5+60b^2c^4-160b^3c^3+240b^4c^2-192b^5c+64b^6 \mid c^3-4bc+4b^2$

c^6

$3c^4 \mid -12bc^5+60b^2c^4-160b^3c^3$

$-12bc^3+16b^2c^2 \mid -12bc^5+48b^2c^4-64b^3c^3$

$3c^4-12bc^3+16b^2c^2 \mid 12b^2c^4-96b^3c^3+240b^4c^2-192b^5c+64b^6$

$3c^4-24bc^3+48b^2c^2$

$12b^2c^3-48b^3c+16b^4$

$3c^4-24bc^3+60b^2c^3-48b^3c+16b^4 \mid 12b^2c^4-96b^3c^3+240b^4c^2-192b^5c+64b^6$

12.

$$
\begin{array}{l|l}
 & 2a^2+4ab-3b^2 \\
8a^6+48a^5b+60a^4b^2-\ 80a^3b^3-90a^2b^4+108ab^5-27b^6 & \\
8a^6 & \\
\hline
12a^4 \quad 48a^5b+60a^4b^2-\ 80a^3b^3 & \\
24a^3b+16a^2b^2 & \\
\hline
12a^4+24a^3b+16a^2b^2 \quad 48a^5b+96a^4b^2+\ 64a^3b^3 & \\
12a^4+48a^3b+48a^2b^2 \quad -36a^4b^3-144a^3b^3-90a^2b^4+108ab^5-27b^6 & \\
-18a^2b^2-36ab^3+9b^4 & \\
\hline
12a^4+48a^3b+30a^2b^2-36ab^3+9b^4 \quad -36a^4b^2-144a^3b^3-90a^2b^4+108ab^5-27b^6 & \\
\end{array}
$$

EXERCISE 77.

1.

$$
\begin{array}{rrl}
 & 27\dot{4}62\dot{5} & \mid 65 \\
6^3 = & 216 & \\
\hline
3(60)^2 = & 10800 & \mid\ 58625 \\
3(60\times 5) = & 900 & \\
5^2 = & 25 & \\
\hline
 & 11725 & \mid\ 58625
\end{array}
$$

2.

$$
\begin{array}{rrl}
 & 11\dot{0}59\dot{2} & \mid 48 \\
4^3 = & 64 & \\
\hline
3(40)^2 = & 4800 & \mid\ 46592 \\
3(40\times 8) = & 960 & \\
8^2 = & 64 & \\
\hline
 & 5824 & \mid\ 46592
\end{array}
$$

3.

$$
\begin{array}{rrl}
 & 26\dot{2}14\dot{4} & \mid 64 \\
6^3 = & 216 & \\
\hline
3(60)^2 = & 10800 & \mid\ 46144 \\
3(60\times 4) = & 720 & \\
4^2 = & 16 & \\
\hline
 & 11536 & \mid\ 46144
\end{array}
$$

4.

$$
\begin{array}{rrl}
 & 88\dot{4}73\dot{6} & \mid 96 \\
9^3 = & 729 & \\
\hline
3(90)^2 = & 24300 & \mid\ 155736 \\
3(90\times 6) = & 1620 & \\
6^2 = & 36 & \\
\hline
 & 25956 & \mid\ 155736
\end{array}
$$

5.

$$
\begin{array}{rrl}
 & 10\dot{9}21\dot{5}35\dot{2} & \mid 478 \\
4^3 = & 64 & \\
\hline
3(40)^2 = & 4800 & \mid\ 45215 \\
3(40\times 7) = & 840 & \\
7^2 = & 49 & \\
\hline
 & 5689 & \mid\ 39823 \\
 & & \quad 5392352 \\
\hline
3(470)^2 = & 662700 & \\
3(470\times 8) = & 11280 & \\
8^2 = & 64 & \\
\hline
 & 674044 & \mid\ 5392352
\end{array}
$$

6.

$\dot{1}48\dot{1}54\dot{4}\,|\,\underline{114}$

$1^3 =$		1
$3(10)^2 =$	300	481
$3(10 \times 1) =$	30	
$1^2 =$	1	
	331	331
		150544
$3(110)^2 =$	36300	
$3(110 \times 4) =$	1320	
$4^2 =$	16	
	37636	150544

7.

$\dot{1}60\dot{1}.61\dot{3}\,|\,\underline{11.7}$

$1^3 =$		1
$3(10)^2 =$	300	601
$3(10 \times 1) =$	30	
$1^2 =$	1	
	331	331
		270613
$3(110)^2 =$	36300	
$3(110 \times 7) =$	2310	
$(7)^2 =$	49	
	38659	270613

8.

$\dot{1}25\dot{9}71\dot{2}\,|\,\underline{108}$

$1^3 =$		1
$3(10)^2 =$	300	259712
$3(100)^2 =$	30000	
$3(100 \times 8) =$	2400	
$8^2 =$	64	
	32464	259712

9.

$\dot{2}.80\dot{3}22\dot{1}\,|\,\underline{1.41}$

$1^3 =$		1
$3(10)^2 =$	300	1803
$3(10 \times 4) =$	120	
$4^2 =$	16	
	436	1744
		59221
$3(140)^2 =$	58800	
$3(140 \times 1) =$	420	
$1^2 =$	1	
	59221	59221

10.

$\dot{7}07\dot{7}88\dot{8}\,|\,\underline{192}$

$1^3 =$		1
$3(10)^2 =$	300	6077
$3(10 \times 9) =$	270	
$9^2 =$	81	
	651	5859
		218888
$3(190)^2 =$	108300	
$3(190 \times 2) =$	1140	
$2^2 =$	4	
	109444	218888

11.

$1\dot{2}.81\dot{2}90\dot{4}\,|\,\underline{2.34}$

$2^3 =$		8
$3(20)^2 =$	1200	4812
$3(20 \times 3) =$	180	
$3^2 =$	9	
	1389	4167
		645904
$3(20 \times 3) =$	180	
$2(3)^2 =$	18	
$3(230)^2 =$	158700	
$3(230 \times 4) =$	2760	
$4^2 =$	16	
	161476	645904

12.

$$
\begin{array}{rr|l}
 & & 5\dot{6}.62\dot{3}10\dot{4}\,|\,\underline{3.84} \\
3^3 = & & \underline{27} \\
3(30)^2 = & 2700 & 29623 \\
3(30 \times 8) = & 720 & \\
8^2 = & \underline{64} & \\
 & 3484 & \underline{27872} \\
 & & 1751104 \\
3(380)^2 = & 433200 & \\
3(380 \times 4) = & 4560 & \\
4^2 = & \underline{16} & \\
 & 437776 & \underline{1751104}
\end{array}
$$

13.

$$
\begin{array}{rr|l}
 & & 3\dot{3}07\dot{6}.16\dot{1}\,|\,\underline{32.1} \\
3^3 = & & \underline{27} \\
3(30)^2 = & 2700 & 6076 \\
3(30 \times 2) = & 180 & \\
(2)^2 = & \underline{4} & \\
 & 2884 & \underline{5768} \\
 & & 308161 \\
3(30 \times 2) = & 180 & \\
2(2)^2 = & \underline{8} & \\
3(320)^2 = & 307200 & \\
3(320 \times 1) = & 960 & \\
1^2 = & \underline{1} & \\
 & 308161 & \underline{308161}
\end{array}
$$

14.

$$
\begin{array}{rr|l}
 & & 10\dot{2}50\dot{3}.23\dot{2}\,|\,\underline{46.8} \\
4^3 = & & \underline{64} \\
3(40)^2 = & 4800 & 38503 \\
3(40 \times 6) = & 720 & \\
6^2 = & \underline{36} & \\
 & 5556 & \underline{33336} \\
 & & 5167232 \\
3(460)^2 = & 634800 & \\
3(460 \times 8) = & 11040 & \\
8^2 = & \underline{64} & \\
 & 645904 & \underline{5167232}
\end{array}
$$

15.

		$82\dot{0}.02\dot{5}85\dot{6}$ | 9.36
$9^3 =$		729
$3(90)^2 =$	24300	91025
$3(90 \times 3) =$	810	
$3^2 =$	9	
	25119	75357
		15668856
	810	
	18	
$3(930)^2 =$	2594700	
$3(930 \times 6) =$	16740	
$6^2 =$	36	
	2611476	15668856

16.

		$\dot{8}65\dot{3}.00\dot{2}87\dot{7}$ | 20.53
$2^3 =$		8
$3(200)^2 =$	120000	653002
$5(200 \times 5) =$	3000	
$(5)^2 =$	25	
	123025	615125
		37877877
$3(2050)^2 =$	12607500	
$3(2050 \times 3) =$	18450	
$(3)^2 =$	9	
	12625959	37877877

17.

		$\dot{1}.37\dot{1}33\dot{0}63\dot{1}$ | 1.111
$1^3 =$		1
$3(10)^2 =$	300	371
$3(10 \times 1) =$	30	
$1^3 =$	1	
	331	331
		40330
$3(110)^2 =$	36300	
$3(110 \times 1) =$	330	
$(1)^2 =$	1	
	36631	36631
		3699631
$3(1110)^2 =$	3696300	
$3(1110 \times 1) =$	3330	
$1^2 =$	1	
	3699631	3699631

18.

		$2\dot{0}91\dot{0}.51\dot{8}87\dot{5}$ | 27.55
$2^3 =$		8
$3(20)^2 =$	1200	12910
$3(20 \times 7) =$	420	
$7^2 =$	49	
	1669	11683
		1227518
	420	
	98	
$3(270)^2 =$	218700	
$3(270 \times 5) =$	4050	
$5^2 =$	25	
	222775	1113875
		113643875
	4050	
	50	
$3(2750)^2 =$	22687500	
$3(2750 \times 5) =$	41250	
$5^2 =$	25	
	22728775	113643875

19.

		$9\dot{1}.39\dot{8}64\dot{8}46\dot{6}12\dot{5}$ | 4.5045
$4^3 =$		64
$3(40)^2 =$	4800	27398
$3(40 \times 5) =$	600	
$(5)^2 =$	25	
	5425	27125
	600	273648466
	50	
	60750000	
$3(4500 \times 4) =$	54000	
$4^2 =$	16	243216064
	60804016	30432402125
	54000	
	32	
	6085804800	
$3(45040 \times 5) =$	675600	
$5^2 =$	25	
	6086480425	30432402125

20.

$\dot{5}.34\dot{0}10\dot{4}39\dot{3}23\dot{9} \mid 1.7479$

$1^2 =$	1	
$3(10)^2 =$	300	4340
$3(10 \times 7) =$	210	
$(7)^2 =$	49	
	559	3913
	210	427104
	98	
$3(170)^2 =$	86700	
$3(170 \times 4) =$	2040	
$(4)^2 =$	16	
	88756	355024
	2040	72080393
	32	
$3(1740)^2 =$	9082800	
$3(1740 \times 7) =$	36540	
$7^2 =$	49	
	9119389	63835723
	36540	8244670239
	98	
$3(17470)^2 =$	915602700	
$3(17470 \times 9) =$	471690	
$9^2 =$	81	
	916074471	8244670239

21.

(1)

$\dot{2}.50\dot{0} \mid 1.3572$

$1^3 =$	1	
$3(10)^2 =$	300	1500
$3(10 \times 3) =$	90	
$3^2 =$	9	1197
	399	303000
	90	
	18	
$3(130)^2 =$	50700	
$3(130 \times 5) =$	1950	
$5^2 =$	25	263375
	52675	39625000
	1950	
	50	
$3(1350)^2 =$	5467500	
$3(1350 \times 7) =$	28350	
$7^2 =$	49	39471293
	5495899	153707000

(2)

		0.20̇0̇0̇0̇0̇0̇0̇0̇ | 0.5848
$5^3 =$		125
$3(50)^2 =$	7500	75000
$3(50 \times 8) =$	1200	
$8^2 =$	64	
	8764	70112
	1200	4888000
	128	
$3(580)^2 =$	1009200	
$3(580 \times 4) =$	6960	
$4^2 =$	16	
	1016176	4064704
	6960	823296000
	32	
$3(5840)^2 =$	102316800	
$3(5840 \times 8) =$	140160	
$8^2 =$	64	
	102457024	819656192

(3)

		0.01̇0̇0̇0̇0̇0̇0̇0̇ | 0.2154
$2^3 =$		8
$3(20)^2 =$	1200	2000
$3(20 \times 1) =$	60	
$1^2 =$	1	
	1261	1261
	60	739000
	2	
$3(210)^2 =$	132300	
$3(210 \times 5) =$	3150	
$5^2 =$	25	
	135475	677375
	3150	61625000
	50	
$3(2150)^2 =$	13867500	
$3(2150 \times 4) =$	25800	
$4^2 =$	16	
	13893316	55573264

(4)

	$\dot{4}.00\dot{0}0\dot{0}0\dot{0}0\dot{0}0\dot{0}0$	1.5874
$1^3 =$	1	
$3(10)^2 =$ 300	3000	
$3(10 \times 5) =$ 150		
$5^2 =$ 25		
475	2375	
150	625000	
50		
$3(150)^2 =$ 67500		
$3(150 \times 8) =$ 3600		
$8^2 =$ 64		
71164	569312	
3600	55688000	
128		
$3(1580)^2 =$ 7489200		
$3(1580 \times 7) =$ 33180		
$7^2 =$ 49		
7522429	52657003	
33180	3030997000	
98		
$3(15870)^2 =$ 755570700		
$3(15870 \times 4) =$ 190440		
$4^2 =$ 16		
755761156	3023044624	

(5)

	$0.40\dot{0}0\dot{0}0\dot{0}0\dot{0}0\dot{0}0$	0.7368
$7^3 =$	343	
$3(70)^2 =$ 14700	57000	
$3(70 \times 3) =$ 630		
$3^2 =$ 9		
15339	46017	
630	10983000	
18		
$3(730)^2 =$ 1598700		
$3(730 \times 6) =$ 13140		
$6^2 =$ 36		
1611876	9671256	
13140	1611744000	
72		
$3(7360)^2 =$ 162508800		
$3(7360 \times 8) =$ 196640		
$8^2 =$ 64		
162705504	1301644032	

Exercise 78.

1.

$$81a^4-540a^3b+1350a^2b^2-1500ab^3+625b^4 \mid 9a^2-30ab+25b^2$$

$81a^4$

$$18a^2-30ab \mid -540a^3b+1350a^2b^2$$
$$-540a^3b+900a^2b^2$$

$$18a^2-60ab+25b^2 \mid 450a^2b^2-1500ab^3+625b^4$$
$$450a^2b^2-1500ab^3+625b^4$$

$$9a^2-30ab+25b^2 \mid 3a-5b$$

$9a^2$

$$6a-5b \mid -30ab+25b^2$$
$$-30ab+25b^2$$

2.

$$x^8-4x^7+10x^6-16x^5+19x^4-16x^3+10x^2-4x+1 \mid x^4-2x^3+3x^2-2x+1$$

x^8

$$2x^4-2x^3 \mid -4x^7+10x^6$$
$$-4x^7+4x^6$$

$$2x^4-4x^3+3x^2 \mid 6x^6-16x^5+19x^4$$
$$6x^6-12x^5+9x^4$$

$$2x^4-4x^3+6x^2-2x \mid -4x^5+10x^4-16x^3+10x^2$$
$$-4x^5+8x^4-12x^3+4x^2$$

$$2x^4-4x^3+6x^2-4x+1 \mid 2x^4-4x^3+6x^2-4x+1$$
$$2x^4-4x^3+6x^2-4x+1$$

$$x^4-2x^3+3x^2-2x+1 \mid x^2-x+1$$

x^4

$$2x^2-x \mid -2x^3+3x^2$$
$$-2x^3+x^2$$

$$2x^2-2x+1 \mid 2x^2-2x+1$$
$$2x^2-2x+1$$

3.

$$64-192x+240x^2-160x^3+60x^4-12x^5+x^6 \mid 8-12x+6x^2-x^3$$

64

$$16-12x \mid -192x+240x^2$$
$$-192x+144x^2$$

$$16-24x+6x^2 \mid 96x^2-160x^3+60x^4$$
$$96x^2-144x^3+36x^4$$

$$16-24x+12x^2-x^3 \mid -16x^3+24x^4-12x^5+x^6$$
$$-16x^3+24x^4-12x^5+x^6$$

$$
\begin{array}{rl|l}
 & 8-12x+6x^2-x^3 & 2-x \\
2^3= & 8 & \\
3(2)^2=12 & & -12x+6x^2-x^3 \\
(6-x)(-x)= & -6x+x^2 & \\
\hline
 & 12-6x+x^2 & -12x+6x^2-x^3
\end{array}
$$

4.

$$
\begin{array}{rl|l}
 & 729x^6-1458x^5+1215x^4-540x^3+135x^2-18x+1 & 9x^2-6x+1 \\
(9x^2)^3= & 729x^6 & \\
243x^4 & & -1458x^5+1215x^4-540x^3 \\
-162x^3 & & \\
+36x^2 & & \\
\hline
 & 243x^4-162x^3+36x^2 & -1458x^5+\ 972x^4-216x^3 \\
 & & 243x^4-324x^3+135x^2-18x+1 \\
243x^4-324x^3+108x^2 & & \\
27x^2-18x & & \\
+1 & & \\
\hline
 & 243x^4-324x^3+135x^2-18x+1 & 243x^4-324x^3+135x^2-18x+1
\end{array}
$$

$$
\begin{array}{rl|l}
 & 9x^2-6x+1 & 3x-1 \\
 & 9x^2 & \\
6x-1 & & -6x+1 \\
 & & -6x+1
\end{array}
$$

5.

$$
\begin{array}{rl|l}
 & 1-8y+28y^2-56y^3+70y^4-56y^5+28y^6-8y^7+y^8 & 1-4y+6y^2-4y^3+y^4 \\
1 & & \\
2-4y & -8y+28y^2 & \\
 & -8y+16y^2 & \\
\hline
2-8y+6y^2 & 12y^2-56y^3+70y^4 & \\
 & 12x^2-48y^3+36y^4 & \\
\hline
2-8y+12y^2-4y^3 & -\ 8y^3+34y^4-56y^5+28y^6 & \\
 & -\ 8y^3+32y^4-48y^5+16y^6 & \\
\hline
2-8y+12y^2-8y^3+y^4 & 2y^4-\ 8y^5+12y^6-8y^7+y^8 & \\
 & 2y^4-\ 8y^5+12y^6-8y^7+y^8 &
\end{array}
$$

$$
\begin{array}{rl|l}
 & 1-4y+6y^2-4y^3+y^4 & 1-2y+y^2 \\
1 & & \\
2-2y & -4y+6y^2 & \\
 & -4y+4y^2 & \\
\hline
2-4y+y^2 & 2y^2-4y^3+y^4 & \\
 & 2y^2-4y^3+y^4 &
\end{array}
$$

$$
\begin{array}{rl|l}
 & 1-2y+y^2 & 1-y \\
1 & & \\
2-y & -2y+y^2 & \\
 & -2y+y^2 &
\end{array}
$$

Exercise 79.

1. $\sqrt{x^3} = x^{\frac{3}{2}}$.
$\sqrt[3]{x^2} = x^{\frac{2}{3}}$.
$(\sqrt{x})^5 = x^{\frac{5}{2}}$.
$\sqrt[3]{a^4} = a^{\frac{4}{3}}$.
$\sqrt[4]{a^6} = a^{\frac{6}{4}}$.
$(\sqrt[3]{a})^7 = a^{\frac{7}{3}}$.
$\sqrt[6]{a^3b^3} = a^{\frac{3}{6}}b^{\frac{3}{6}}$.

2. $\sqrt[3]{xy^2z^3} = x^{\frac{1}{3}}y^{\frac{2}{3}}z$.
$\sqrt[6]{x^3y^2z^4} = x^{\frac{3}{6}}y^{\frac{2}{6}}z^{\frac{4}{6}}$.
$\sqrt[7]{a^5b^6c^7} = a^{\frac{5}{7}}b^{\frac{6}{7}}c$.
$5\sqrt{a^2bc^3x^4} = 5ab^{\frac{1}{2}}c^{\frac{3}{2}}x^2$.

3. $a^{\frac{2}{3}} = \sqrt[3]{a^2}$.
$a^{\frac{1}{2}}b^{\frac{1}{3}} = \sqrt[6]{a^3b}$.
$4x^{\frac{1}{2}}y^{-\frac{1}{3}} = 4\sqrt[6]{xy^{-2}}$.
$3x^{\frac{1}{3}}y^{-\frac{2}{3}} = 3\sqrt[3]{xy^{-2}}$.

4. $a^{-2} = \frac{1}{a^2}$.
$3x^{-1}y^{-3} = \frac{3}{xy^3}$.
$6x^{-3}y = \frac{6y}{x^3}$.
$x^4y^{-5} = \frac{x^4}{y^5}$.
$\frac{2a^{-1}x}{3^{-1}b^2y^{-3}} = \frac{6xy^3}{ab^2}$.

5. $\frac{3xy}{z^2} = 3xyz^{-2}$.
$\frac{z}{x^3y^4} = x^{-3}y^{-4}z$.
$\frac{a}{bc} = ab^{-1}c^{-1}$.
$\frac{c^2}{a^3b^{-2}} = a^{-3}b^2c^2$.
$\frac{x^{-\frac{1}{2}}}{y^{-\frac{3}{2}}} = x^{-\frac{1}{2}}y^{\frac{3}{2}}$.
$\frac{x^{-2}}{y^{\frac{1}{3}}} = x^{-2}y^{-\frac{1}{3}}$.

6. $a^{\frac{1}{2}} \times a^{\frac{1}{2}} = a^{\frac{2}{2}}$.
$b^{\frac{1}{3}} \times b^{\frac{1}{3}} = b^{\frac{2}{3}}$.
$c^{\frac{2}{3}} \times c^{\frac{1}{12}} = c^{\frac{9}{12}}$.
$d^{\frac{3}{4}} \times d^{\frac{1}{12}} = d^{\frac{10}{12}}$.

7. $m^{\frac{1}{2}} \times m^{-\frac{1}{2}} = m^{\frac{0}{2}}$.
$n^{\frac{2}{3}} \times n^{-\frac{1}{12}} = n^{\frac{7}{12}}$.
$a^0 \times a^{\frac{1}{2}} = a^{\frac{1}{2}}$.
$a^0 \times a^{-\frac{1}{2}} = \frac{1}{a^{\frac{1}{2}}}$.

8. $a^{\frac{1}{2}} \times \sqrt{a} = a^{\frac{1}{2}} \times a^{\frac{1}{2}} = a$.
$c^{-\frac{1}{2}} \times \sqrt{c} = \frac{1}{c^{\frac{1}{2}}} \times c^{\frac{1}{2}} = 1$.
$y^{\frac{1}{2}} \times \sqrt[4]{y} = y^{\frac{1}{2}} \times y^{\frac{1}{4}} = y^{\frac{3}{4}}$.
$x^{\frac{1}{2}} \times \sqrt{x^{-1}} = x^{\frac{1}{2}} \times x^{-\frac{1}{2}} = x^{\frac{0}{2}}$.

9. $ab^{\frac{1}{2}}c \times a^{-\frac{1}{2}}bc^{\frac{1}{2}} = a^{\frac{1}{2}}b^{\frac{3}{2}}c^{\frac{1}{2}}$.

$a^{\frac{3}{4}}b^{\frac{1}{2}}c^{-\frac{1}{4}} \times a^{\frac{1}{4}}b^{-\frac{1}{2}}c^{\frac{1}{4}}d = ac^{\frac{1}{4}}d$.

10. $x^{\frac{1}{2}}y^{\frac{3}{2}}z^{\frac{1}{2}} \times x^{-\frac{3}{2}}y^{-\frac{1}{2}}z^{-\frac{1}{2}} = x^{-\frac{1}{2}}y^{\frac{1}{2}}z^{-\frac{1}{2}}$.

$x^{\frac{3}{2}}y^{\frac{1}{2}}z^{\frac{1}{2}} \times x^{-\frac{1}{2}}y^{-\frac{1}{2}}z^{-\frac{1}{2}} = x^{\frac{1}{2}}y^{-\frac{1}{2}}$.

11. $a^{\frac{1}{2}} \times a^{-\frac{1}{4}} \times a^{-\frac{1}{4}} \times a^{-\frac{1}{2}} = a^{-\frac{1}{2}}$.

$$\left(\frac{ay}{x}\right)^{\frac{1}{2}} \times \left(\frac{bx}{y^2}\right)^{\frac{1}{2}} \times \left(\frac{y^2}{a^2b^2}\right)^{\frac{1}{4}}$$

$$= \frac{a^{\frac{1}{2}}y^{\frac{1}{2}}}{x^{\frac{1}{2}}} \times \frac{b^{\frac{1}{2}}x^{\frac{1}{2}}}{y^{\frac{1}{2}}} \times \frac{y^{\frac{1}{2}}}{a^{\frac{1}{2}}b^{\frac{1}{2}}}$$

$$= \frac{y^{\frac{1}{2}}}{b^{\frac{1}{2}}x^{\frac{1}{2}}}.$$

12. $a^{\frac{1}{2}} \div a^{\frac{1}{3}} = a^{\frac{1}{6}}$.

$c^{\frac{5}{6}} \div c^{\frac{1}{2}} = c^{\frac{1}{3}}$.

$n^{\frac{7}{12}} \div n^{\frac{3}{4}} = n^{-\frac{1}{6}}$.

$a^{\frac{2}{3}} \div \sqrt[3]{a^2} = a^{\frac{2}{3}} \div a^{\frac{2}{3}} = a^{\frac{1}{3}}$.

13. $(a^6)^{\frac{1}{2}} \div (a^6)^{\frac{2}{3}} = (a^6)^{-\frac{1}{3}} = a^{-1} = \frac{1}{a}$.

$(c^{-\frac{1}{2}})^{\frac{2}{3}} = c^{-\frac{1}{3}} = \frac{1}{c^5}$.

$(m^{-\frac{1}{2}})^4 = m^{-2} = \frac{1}{m^2}$.

$(n^{\frac{1}{2}})^{-3} = n^{-1} = \frac{1}{n}$.

$(x^{\frac{3}{4}})^{\frac{4}{3}} = x^{\frac{12}{12}} = x$.

14. $(p^{-\frac{3}{2}})^{-\frac{2}{3}} = p^{\frac{1}{3}}$.

$(q^{\frac{2}{3}})^{-\frac{1}{2}} = q^{-\frac{1}{3}}$.

$(x^{-\frac{2}{3}}y^{\frac{2}{3}})^{-\frac{1}{2}} = x^{\frac{1}{3}}y^{-1}$.

$(a^{\frac{2}{3}} \times a^{\frac{3}{11}})^{-\frac{11}{12}} = (a^{\frac{31}{11}})^{-\frac{11}{12}} = a^{-\frac{1}{4}}$.

15. $(4a^{-\frac{2}{3}})^{-\frac{3}{2}} = 4^{-\frac{3}{2}}a = \frac{a}{8}$.

$(27b^{-3})^{-\frac{2}{3}} = 27^{-\frac{2}{3}}b^2 = \frac{b^2}{9}$.

$(64c^{16})^{-\frac{3}{8}} = 64^{-\frac{3}{8}}c^{-6} = \frac{1}{32c^6}$.

$(32c^{-10})^{\frac{2}{5}} = 32^{\frac{2}{5}}c^{-4} = \frac{4}{c^4}$.

16. $$\left(\frac{16a^{-4}}{81b^3}\right)^{-\frac{3}{4}} = \frac{16^{-\frac{3}{4}}a^3}{81^{-\frac{3}{4}}b^{-\frac{3}{4}}} = \frac{81^{\frac{3}{4}}a^3b^{\frac{3}{4}}}{16^{\frac{3}{4}}} = \frac{27a^3b^{\frac{3}{4}}}{8}.$$

$$\left(\frac{9a^4}{16b^{-3}}\right)^{-\frac{3}{2}} = \frac{9^{-\frac{3}{2}}a^{-6}}{16^{-\frac{3}{2}}b^{\frac{9}{2}}} = \frac{16^{\frac{3}{2}}}{9^{\frac{3}{2}}a^6b^{\frac{9}{2}}} = \frac{64}{27a^6b^{\frac{9}{2}}}.$$

$(3^{\frac{3}{4}}a^{-3})^{-\frac{2}{3}} = 3^{-\frac{1}{2}}a^2 = \frac{a^2}{3^{\frac{1}{2}}}$.

$$\left(\frac{256}{625}\right)^{-\frac{3}{4}} = \frac{256^{-\frac{3}{4}}}{625^{-\frac{3}{4}}} = \frac{625^{\frac{3}{4}}}{256^{\frac{3}{4}}} = \frac{125}{64}$$

Exercise 80.

1.

$$\begin{array}{l} x^{2p}+x^{p}y^{p}+y^{2p} \\ x^{2p}-x^{p}y^{p}+y^{2p} \\ \hline x^{4p}+x^{3p}y^{p}+x^{2p}y^{2p} \\ \quad -x^{3p}y^{p}-x^{2p}y^{2p}-x^{p}y^{3p} \\ \qquad\qquad x^{2p}y^{2p}+x^{p}y^{3p}+y^{4p} \\ \hline x^{4p}\qquad\quad +x^{2p}y^{2p}\qquad\quad +y^{4p} \end{array}$$

2.

$$\begin{array}{l} x^{m+n}-y^{n} \\ x^{n}+y^{m+n} \\ \hline x^{m+n}-x^{n}y^{n} \\ \qquad\qquad +x^{m+n-n}y^{m+n} \\ \qquad\qquad\qquad\qquad -y^{m+n} \\ \hline x^{m+n}-x^{n}y^{n}+x^{m+n-n}y^{m+n}-y^{m+n} \end{array}$$

3.

$$\begin{array}{l} x^{\frac{3}{2}}-2x^{\frac{1}{2}}+1 \\ x^{\frac{1}{2}}-1 \\ \hline x^{2}-2x^{\frac{3}{2}}+x^{\frac{1}{2}} \\ \quad -x^{\frac{3}{2}}+2x^{\frac{1}{2}}-1 \\ \hline x^{2}-3x^{\frac{3}{2}}+3x^{\frac{1}{2}}-1 \end{array}$$

4.

$$\begin{array}{l} 8a^{\frac{3}{2}}+4a^{\frac{3}{2}}b^{\frac{1}{2}}+5a^{\frac{1}{2}}b^{\frac{3}{2}}+9b^{\frac{3}{2}} \\ 2a^{\frac{1}{2}}-b^{\frac{1}{2}} \\ \hline 16a+8a^{\frac{3}{2}}b^{\frac{1}{2}}+10a^{\frac{3}{2}}b^{\frac{3}{2}}+18a^{\frac{1}{2}}b^{\frac{3}{2}} \\ \quad -8a^{\frac{3}{2}}b^{\frac{1}{2}}-4a^{\frac{3}{2}}b^{\frac{1}{2}}-5a^{\frac{1}{2}}b^{\frac{3}{2}}-9b \end{array}$$

5.

$$\begin{array}{l} 1+ab^{-1}+a^{2}b^{-2} \\ 1-ab^{-1}+a^{2}b^{-2} \\ \hline 1+ab^{-1}+a^{2}b^{-2} \\ \quad -ab^{-1}-a^{2}b^{-2}-a^{3}b^{-3} \\ \qquad\qquad +a^{2}b^{-2}+a^{3}b^{-3}+a^{4}b^{-4} \\ \hline 1\qquad\quad +a^{2}b^{-2}\qquad\quad +a^{4}b^{-4} \end{array}$$

6.

$$\begin{array}{l} a^{2}b^{-2}+2+a^{-2}b^{2} \\ a^{2}b^{-2}-2-a^{-2}b^{2} \\ \hline a^{4}b^{-4}+2a^{2}b^{-2}+1 \\ \quad -2a^{2}b^{-2}-4-2a^{-2}b^{2} \\ \qquad\qquad -1-2a^{-2}b^{2}-a^{-4}b^{4} \\ \hline a^{4}b^{-4}\qquad -4-4a^{-2}b^{2}-a^{-4}b^{4} \end{array}$$

7.

$$\begin{array}{l} 4x^{-3}+3x^{-2}+2x^{-1}+1 \\ x^{-2}-x^{-1}+1 \\ \hline 4x^{-5}+3x^{-4}+2x^{-3}+x^{-2} \\ \quad -4x^{-4}-3x^{-3}-2x^{-2}-x^{-1} \\ \qquad\qquad +4x^{-3}+3x^{-2}+2x^{-1}+1 \\ \hline 4x^{-5}-x^{-4}+3x^{-3}+2x^{-2}+x^{-1}+1 \end{array}$$

8.

$$
\begin{array}{l|l}
x^{4n} - y^{4n} & x^n - y^n \\
\underline{x^{4n} - x^{3n}y^n} & \overline{x^{3n} + x^{2n}y^n + x^n y^{2n} + y^{3n}} \\
x^{3n}y^n - y^{4n} & \\
\underline{x^{3n}y^n - x^{2n}y^{2n}} & \\
x^{2n}y^{2n} - y^{4n} & \\
\underline{x^{2n}y^{2n} - x^n y^{3n}} & \\
x^n y^{3n} - y^{4n} & \\
\underline{x^n y^{3n} - y^{4n}} &
\end{array}
$$

9.

$$
\begin{array}{l|l}
x + y + z - 3x^{\frac{1}{3}}y^{\frac{1}{3}}z^{\frac{1}{3}} & x^{\frac{1}{3}} + y^{\frac{1}{3}} + z^{\frac{1}{3}} \\
\underline{x + x^{\frac{2}{3}}y^{\frac{1}{3}} + x^{\frac{2}{3}}z^{\frac{1}{3}}} & \overline{x^{\frac{2}{3}} - x^{\frac{1}{3}}y^{\frac{1}{3}} - x^{\frac{1}{3}}z^{\frac{1}{3}} + y^{\frac{2}{3}} - y^{\frac{1}{3}}z^{\frac{1}{3}} + z^{\frac{2}{3}}} \\
- x^{\frac{2}{3}}y^{\frac{1}{3}} - x^{\frac{2}{3}}z^{\frac{1}{3}} - 3x^{\frac{1}{3}}y^{\frac{1}{3}}z^{\frac{1}{3}} + y + z & \\
\underline{- x^{\frac{2}{3}}y^{\frac{1}{3}} - x^{\frac{1}{3}}y^{\frac{2}{3}} - x^{\frac{1}{3}}y^{\frac{1}{3}}z^{\frac{1}{3}}} & \\
- x^{\frac{2}{3}}z^{\frac{1}{3}} + x^{\frac{1}{3}}y^{\frac{2}{3}} - 2x^{\frac{1}{3}}y^{\frac{1}{3}}z^{\frac{1}{3}} + y + z & \\
\underline{- x^{\frac{2}{3}}z^{\frac{1}{3}} - x^{\frac{1}{3}}z^{\frac{2}{3}} - x^{\frac{1}{3}}y^{\frac{1}{3}}z^{\frac{1}{3}}} & \\
x^{\frac{1}{3}}y^{\frac{2}{3}} + x^{\frac{1}{3}}z^{\frac{2}{3}} - x^{\frac{1}{3}}y^{\frac{1}{3}}z^{\frac{1}{3}} + y + z & \\
\underline{x^{\frac{1}{3}}y^{\frac{2}{3}} + y^{\frac{2}{3}}z^{\frac{1}{3}} + y} & \\
- x^{\frac{1}{3}}y^{\frac{1}{3}}z^{\frac{1}{3}} + x^{\frac{1}{3}}z^{\frac{2}{3}} - y^{\frac{2}{3}}z^{\frac{1}{3}} + z & \\
\underline{- x^{\frac{1}{3}}y^{\frac{1}{3}}z^{\frac{1}{3}} - y^{\frac{2}{3}}z^{\frac{1}{3}} - y^{\frac{1}{3}}z^{\frac{2}{3}}} & \\
x^{\frac{1}{3}}z^{\frac{2}{3}} + y^{\frac{1}{3}}z^{\frac{2}{3}} + z & \\
\underline{x^{\frac{1}{3}}z^{\frac{2}{3}} + y^{\frac{1}{3}}z^{\frac{2}{3}} + z} &
\end{array}
$$

10.

$$
\begin{array}{l|l}
x + y & x^{\frac{2}{3}} - x^{\frac{2}{3}}y^{\frac{1}{3}} + x^{\frac{1}{3}}y^{\frac{2}{3}} - x^{\frac{1}{3}}y^{\frac{2}{3}} + y^{\frac{2}{3}} \\
\underline{x - x^{\frac{2}{3}}y^{\frac{1}{3}} + x^{\frac{1}{3}}y^{\frac{2}{3}} - x^{\frac{2}{3}}y^{\frac{2}{3}} + x^{\frac{1}{3}}y^{\frac{1}{3}}} & \overline{x^{\frac{1}{3}} + y^{\frac{1}{3}}} \\
x^{\frac{1}{3}}y^{\frac{1}{3}} - x^{\frac{2}{3}}y^{\frac{2}{3}} + x^{\frac{1}{3}}y^{\frac{2}{3}} - x^{\frac{1}{3}}y^{\frac{1}{3}} + y & \\
\underline{x^{\frac{1}{3}}y^{\frac{1}{3}} - x^{\frac{2}{3}}y^{\frac{2}{3}} + x^{\frac{1}{3}}y^{\frac{2}{3}} - x^{\frac{1}{3}}y^{\frac{1}{3}} + y} &
\end{array}
$$

11. $x^2y^{-2}+2+x^{-2}y^2 \;\big|\; xy^{-1}+x^{-1}y$
$x^2y^{-2}+1 \qquad\qquad xy^{-1}+x^{-1}y$
$1+x^{-2}y^2$
$1+x^{-2}y^2$

12. $a^{-4}+a^{-2}b^{-2}+b^{-4} \;\big|\; a^{-2}-a^{-1}b^{-1}+b^{-2}$
$a^{-4}+a^{-2}b^{-2}-a^{-3}b^{-1}$
$a^{-3}b^{-1}+b^{-4}$
$a^{-3}b^{-1}-a^{-2}b^{-2}+a^{-1}b^{-3}$
$a^{-2}b^{-2}-a^{-1}b^{-3}+b^{-4}$
$a^{-2}b^{-2}-a^{-1}b^{-3}+b^{-4}$

13. $(4ab^{-1})^2 = 16a^2b^{-2}.$
$(a^{\frac{1}{2}}-b^{\frac{1}{2}})^2 = a-2a^{\frac{1}{2}}b^{\frac{1}{2}}+b.$
$(a+a^{-1})^2 = a^2+2+a^{-2}.$
$(2a^{\frac{1}{2}}b^{\frac{1}{2}}-a^{-\frac{1}{2}}b^{\frac{3}{2}})^2 = 4ab^{\frac{1}{2}}-4b+a^{-1}b^{\frac{3}{2}}.$

14. $a^{\frac{1}{2}}b = 4^{\frac{1}{2}}\times 2 = 4.$
$5ab^{-1} = 5\times 4\times \tfrac{1}{2} = 10.$
$2(ab)^{\frac{1}{3}} = 2\sqrt[3]{8} = 4.$
$a^{-\frac{1}{2}}b^{-1}c^{\frac{3}{2}} = \tfrac{1}{2}\times\tfrac{1}{2}\times 1 = \tfrac{1}{4}.$
$12a^{-2}b^{-3} = 12\times\tfrac{1}{16}\times\tfrac{1}{8} = \tfrac{3}{32}.$

15. $(a^{\frac{1}{2}}-b^{\frac{1}{2}})^3 = a^{\frac{3}{2}}-3ab^{\frac{1}{2}}+3a^{\frac{1}{2}}b^{\frac{3}{2}}-b.$

$(2x^{-1}+x)^4 = (2x^{-1})^4+4(2x^{-1})^3(x)+6(2x^{-1})^2(x)^2$
$+4(2x^{-1})(x)^3+x^4$
$= 16x^{-4}+32x^{-2}+24+8x^2+x^4.$

$(ab^{-1}-by^{-1})^6 = a^6b^{-6}-6(a^5b^{-5}\times by^{-1})+15(a^4b^{-4}\times b^2y^{-2})$
$-20(a^3b^{-3}\times b^3y^{-3})+15(a^2b^{-2}\times b^4y^{-4})$
$-6(ab^{-1}\times b^5y^{-5})+b^6y^{-6}$
$= a^6b^{-6}-6a^5b^{-4}y^{-1}+15a^4b^{-2}y^{-2}-20a^3y^{-3}$
$+15a^2b^2y^{-4}-6ab^4y^{-5}+b^6y^{-6}.$

16.

$$9x^{-4} - 18x^{-3}y^{\frac{1}{2}} + 15x^{-2}y - 6x^{-1}y^{\frac{3}{2}} + y^2 \;\big|\; 3x^{-2} - 3x^{-1}y^{\frac{1}{2}} + y$$

$$9x^{-4}$$

$$6x^{-2} - 3x^{-1}y^{\frac{1}{2}} \;\big|\; -18x^{-3}y^{\frac{1}{2}} + 15x^{-2}y$$

$$-18x^{-3}y^{\frac{1}{2}} + 9x^{-2}y$$

$$6x^{-2} - 6x^{-1}y^{\frac{1}{2}} + y \;\big|\; 6x^{-2}y - 6x^{-1}y^{\frac{3}{2}} + y^2$$

$$6x^{-2}y - 6x^{-1}y^{\frac{3}{2}} + y^2$$

17.

$$8x^3 + 12x^2 - 30x - 35 + 45x^{-1} + 27x^{-2} - 27x^{-3} \;\big|\; 2x + 1 - 3x^{-1}$$

$$8x^3$$

$$3(2x)^2 = 12x^2 \;\big|\; 12x^2 - 30x - 35$$

$$(6x+1)(1) = +6x+1$$

$$12x^2 + 6x + 1 \;\big|\; 12x^2 + 6x + 1$$

$$12x^2 + 12x + 3 \;\big|\; -36x - 36 + 45x^{-1} + 27x^{-2} - 27x^{-3}$$

$$-18 + 9x^{-1} + 9x^{-2} \;\big|\; -36x - 36 + 45x^{-1} + 27x^{-2} - 27x^{-3}$$

$$12x^2 + 12x - 15 + 9x^{-1} + 9x^{-2} \;\big|$$

18.
$$\sqrt[3]{12} = \sqrt[3]{3 \times 2 \times 2} = 3^{\frac{1}{3}} \times 2^{\frac{2}{3}}.$$
$$\sqrt[4]{72} = \sqrt[4]{3^2 \times 2^3} = 3^{\frac{1}{2}} \times 2^{\frac{3}{4}}.$$
$$\sqrt[6]{96} = \sqrt[6]{3 \times 2^5} = 3^{\frac{1}{6}} \times 2^{\frac{5}{6}}.$$
$$\sqrt[8]{64} = \sqrt[8]{2^6} = 2^{\frac{3}{4}}$$
$$= 2^3 \times 3 = 24.$$

19.
$$[(x^{5ab})^3 \times (x^{5b})^{-2}]^{\frac{1}{3a-2}}$$
$$= [(x^{15ab}) \times (x^{-10b})]^{\frac{1}{3a-2}}$$
$$= (x^{15ab-10b})^{\frac{1}{3a-2}}$$
$$= x^{5b}.$$

20.
$$(x^{18a} \times x^{-12})^{\frac{1}{3a-2}}$$
$$= (x^{18a-12})^{\frac{1}{3a-2}}$$
$$= x^6.$$

21.
$$3(a^{\frac{1}{2}} + b^{\frac{1}{2}})^2 - 4(a^{\frac{1}{2}} + b^{\frac{1}{2}})(a^{\frac{1}{2}} - b^{\frac{1}{2}}) + (a^{\frac{1}{2}} - 2b^{\frac{1}{2}})^2$$
$$= 3a + 6a^{\frac{1}{2}}b^{\frac{1}{2}} + 3b - 4a + 4b + a - 4a^{\frac{1}{2}}b^{\frac{1}{2}} + 4b$$
$$= 2a^{\frac{1}{2}}b^{\frac{1}{2}} + 11b.$$

22.
$$\{(a^m)^{m-\frac{1}{m}}\}^{\frac{1}{m+1}}$$
$$= (a^{m^2-1})^{\frac{1}{m+1}}$$
$$= a^{m-1}.$$

23.
$$\left(\frac{x^{p+q}}{x^q}\right)^p \div \left(\frac{x^q}{x^{q-p}}\right)^{p-q}$$
$$= (x^p)^p \div (x^p)^{p-q}$$
$$= x^{pq}.$$

12. $2\sqrt[5]{\frac{7}{16}} = 2\sqrt[5]{\frac{7\times 2}{2^4\times 2}} = \sqrt[5]{14}.$

13. $\sqrt{\frac{a^4c^3}{b^3}} = \sqrt{\frac{a^4c^3}{b^4}\times b} = \frac{a^2c}{b^2}\sqrt{b}.$

14. $\sqrt[4]{\frac{b^4d^2}{a^3c^2}} = \sqrt[4]{\frac{b^4}{a^4c^4}\times ac^3d^2} = \frac{b}{ac}\sqrt[4]{ac^3d^2}.$

15. $\sqrt[3]{\frac{a^2x^4}{b^4}} = \sqrt[3]{\frac{x^3}{b^6}\times a^2b^2x} = \frac{x}{b^2}\sqrt[3]{a^2b^2x}.$

16. $\sqrt[3]{\frac{7a^2}{125x}} = \sqrt[3]{7a^2x^2\times\frac{1}{125x^3}} = \frac{1}{5x}\sqrt[3]{7a^2x^2}.$

17. $\sqrt{\frac{a^2cy^2}{b^3d^2}} = \sqrt{\frac{a^2y^2}{b^4d^2}\times bc} = \frac{ay}{b^2d}\sqrt{bc}.$

18. $2\sqrt[3]{\frac{3a^5b^2c^2}{4x^2yz^3}} = 2\sqrt[3]{6b^2c^3xy^2\times\frac{a^3}{8x^3y^3z^3}} = \frac{a}{xyz}\sqrt[3]{6b^2c^3xy^2}.$

Exercise 84.

1. $3\sqrt{5} = \sqrt{3^2\times 5} = \sqrt{45}.$
2. $3\sqrt{21} = \sqrt{3^2\times 21} = \sqrt{189}.$
3. $3\sqrt[3]{2} = \sqrt[3]{3^3\times 2} = \sqrt[3]{54}.$
4. $2\sqrt[3]{5} = \sqrt[3]{2^3\times 5} = \sqrt[3]{40}.$
5. $2\sqrt[4]{7} = \sqrt[4]{2^4\times 7} = \sqrt[4]{112}.$
6. $3\sqrt[5]{3} = \sqrt[5]{3^5\times 3} = \sqrt[5]{729}.$
7. $2\sqrt[6]{5} = \sqrt[6]{2^6\times 5} = \sqrt[6]{320}.$
8. $2\sqrt[4]{2} = \sqrt[4]{2^4\times 2} = \sqrt[4]{32}.$
9. $-2\sqrt[3]{y} = \sqrt[3]{(-2)^3y} = \sqrt[3]{-8y}.$
10. $-3\sqrt[5]{y^3} = \sqrt[5]{(-3)^5y^3} = \sqrt[5]{-243y^3}.$
11. $-m\sqrt[3]{10} = \sqrt[3]{(-m)^3\,10} = \sqrt[3]{-10m^3}.$
12. $-2\sqrt[7]{x} = \sqrt[7]{(-2)^7x} = \sqrt[7]{-128x}.$
13. $\frac{9}{11}\sqrt{a} = \sqrt{(\frac{9}{11})^2a} = \sqrt{\frac{81a}{121}}.$
14. $-\frac{1}{2}\sqrt[3]{a^2} = \sqrt[3]{(-\frac{1}{2})^3a^2} = \sqrt[3]{-\frac{a^2}{8}}.$
15. $\frac{2}{5}\sqrt{m^3} = \sqrt{(\frac{2}{5})^2m^3} = \sqrt{\frac{9m^3}{25}}.$
16. $-\frac{1}{2}\sqrt[3]{m^7} = \sqrt[3]{(-\frac{1}{2})^3m^7} = \sqrt[3]{-\frac{m^7}{8}}.$

24. $4\sqrt[3]{686} = 4\sqrt[3]{343 \times 2} = 4\sqrt[3]{343} \times \sqrt[3]{2} = 28\sqrt[3]{2}$.

25. $\sqrt[3]{\frac{27a^6b^3}{64x^3y^3}} = \sqrt[3]{\frac{27a^6 \times b^3}{64x^3y^3}} = \sqrt[3]{\frac{27a^6}{64x^3y^3}} \times \sqrt[3]{b^3} = \frac{3a^2}{4xy}\sqrt[3]{b^3}$.

26. $\sqrt{\frac{49a^2b^3}{36x^2y^6}} = \sqrt{\frac{49a^2b^3 \times a}{36x^2y^6}} = \sqrt{\frac{49a^2b^2}{36x^2y^6}} \times \sqrt{a} = \frac{7ab}{6xy^3}\sqrt{a}$.

27. $\sqrt[3]{\frac{512x^3}{125y^3}} = \sqrt[3]{\frac{512 \times x^3}{125y^3}} = \sqrt[3]{\frac{512}{125y^3}} \times \sqrt[3]{x^3} = \frac{8}{5y}\sqrt[3]{x^3}$.

28. $2\sqrt[5]{\frac{m^6n^3x}{3125}} = 2\sqrt[5]{\frac{m^5 \times mn^3x}{3125}} = 2\sqrt[5]{\frac{m^5}{3125}} \times \sqrt[5]{mn^3x} = \frac{2m}{5}\sqrt[5]{mn^3x}$.

29. $3\sqrt[4]{\frac{x^5y^7}{256}} = 3\sqrt[4]{\frac{x^4y^4 \times xy^3}{256}} = 3\sqrt[4]{\frac{x^4y^4}{256}} \times \sqrt[4]{xy^3} = \frac{3xy}{4}\sqrt[4]{xy^3}$.

30. $2\sqrt[3]{\frac{(x-y)^3z^3}{(x+y)^3}} = 2\sqrt[3]{\frac{(x-y)^3}{(x+y)^3}} \times \sqrt[3]{z^3} = \frac{2(x-y)}{x+y}\sqrt[3]{z^3}$.

31. $\frac{4ab}{5c}\sqrt{\frac{75c^2d}{16a^2b^2}} = \frac{4ab}{5c}\sqrt{\frac{25c^2 \times 3d}{16a^2b^2}} = \frac{4ab}{5c}\sqrt{\frac{25c^2}{16a^2b^2}} \times \sqrt{3d} = \sqrt{3d}$.

Exercise 83.

1. $\sqrt{\frac{1}{2}} = \sqrt{\frac{2}{4}} = \sqrt{2 \times \frac{1}{4}} = \frac{1}{2}\sqrt{2}$.
2. $\sqrt{\frac{1}{3}} = \sqrt{\frac{3}{9}} = \sqrt{3 \times \frac{1}{9}} = \frac{1}{3}\sqrt{3}$.
3. $\sqrt{\frac{1}{5}} = \sqrt{\frac{5}{25}} = \sqrt{5 \times \frac{1}{25}} = \frac{1}{5}\sqrt{5}$.
4. $3\sqrt{\frac{4}{5}} = 3\sqrt{\frac{20}{25}} = 3\sqrt{5 \times \frac{4}{25}} = \frac{6}{5}\sqrt{5}$.
5. $2\sqrt[4]{\frac{5}{32}} = 2\sqrt[4]{\frac{40}{256}} = 2\sqrt[4]{40 \times \frac{1}{256}} = \frac{1}{2}\sqrt[4]{40}$.
6. $3\sqrt{\frac{7}{80}} = 3\sqrt{\frac{35}{400}} = 3\sqrt{35 \times \frac{1}{400}} = \frac{3}{20}\sqrt{35}$.
7. $\sqrt[3]{\frac{5}{8}} = \sqrt[3]{\frac{45}{216}} = \sqrt[3]{45 \times \frac{1}{216}} = \frac{1}{6}\sqrt[3]{45}$.
8. $\sqrt[3]{\frac{9}{16}} = \sqrt[3]{\frac{36}{64}} = \sqrt[3]{36 \times \frac{1}{64}} = \frac{1}{4}\sqrt[3]{36}$.
9. $\sqrt[3]{\frac{7}{686}} = \sqrt[3]{\frac{7}{7^3 \times 2}} = \sqrt[3]{\frac{7 \times 2^2}{7^3 \times 2^3}} = \frac{1}{14}\sqrt[3]{28}$.
10. $2\sqrt[3]{\frac{4}{25}} = 2\sqrt[3]{\frac{20}{125}} = 2\sqrt[3]{20 \times \frac{1}{125}} = \frac{2}{5}\sqrt[3]{20}$.
11. $3\sqrt[5]{\frac{5}{81}} = 3\sqrt[5]{\frac{5 \times 3}{3^4 \times 3}} = \sqrt[5]{15}$.

12. $2\sqrt[5]{\frac{7}{16}} = 2\sqrt[5]{\frac{7\times 2}{2^4\times 2}} = \sqrt[5]{14}.$

13. $\sqrt{\frac{a^4c^2}{b^3}} = \sqrt{\frac{a^4c^2}{b^4}\times b} = \frac{a^2c}{b^2}\sqrt{b}.$

14. $\sqrt[4]{\frac{b^4d^2}{a^3c^2}} = \sqrt[4]{\frac{b^4}{a^4c^4}\times ac^2d^2} = \frac{b}{ac}\sqrt[4]{ac^2d^2}.$

15. $\sqrt[3]{\frac{a^2x^4}{b^4}} = \sqrt[3]{\frac{x^3}{b^6}\times a^2b^2x} = \frac{x}{b^2}\sqrt[3]{a^2b^2x}.$

16. $\sqrt[3]{\frac{7a^2}{125x}} = \sqrt[3]{7a^2x^2\times\frac{1}{125x^3}} = \frac{1}{5x}\sqrt[3]{7a^2x^2}.$

17. $\sqrt{\frac{a^2cy^2}{b^3d^2}} = \sqrt{\frac{a^2y^2}{b^4d^2}\times bc} = \frac{ay}{b^2d}\sqrt{bc}.$

18. $2\sqrt[3]{\frac{3a^3b^2c^2}{4x^2yz^3}} = 2\sqrt[3]{6b^2c^3xy^2\times\frac{a^3}{8x^3y^3z^3}} = \frac{a}{xyz}\sqrt[3]{6b^2c^3xy^3}.$

Exercise 84.

1. $3\sqrt{5} = \sqrt{3^2\times 5} = \sqrt{45}.$
2. $3\sqrt{21} = \sqrt{3^2\times 21} = \sqrt{189}.$
3. $3\sqrt[3]{2} = \sqrt[3]{3^3\times 2} = \sqrt[3]{54}.$
4. $2\sqrt[3]{5} = \sqrt[3]{2^3\times 5} = \sqrt[3]{40}.$
5. $2\sqrt[4]{7} = \sqrt[4]{2^4\times 7} = \sqrt[4]{112}.$
6. $3\sqrt[5]{3} = \sqrt[5]{3^5\times 3} = \sqrt[5]{729}.$
7. $2\sqrt[6]{5} = \sqrt[6]{2^6\times 5} = \sqrt[6]{320}.$
8. $2\sqrt[4]{2} = \sqrt[4]{2^4\times 2} = \sqrt[4]{32}.$
9. $-2\sqrt[3]{y} = \sqrt[3]{(-2)^3y} = \sqrt[3]{-8y}.$
10. $-3\sqrt[5]{y^3} = \sqrt[5]{(-3)^5y^3} = \sqrt[5]{-243y^3}.$
11. $-m\sqrt[3]{10} = \sqrt[3]{(-m)^3\,10} = \sqrt[3]{-10m^3}.$
12. $-2\sqrt[7]{x} = \sqrt[7]{(-2)^7x} = \sqrt[7]{-128x}.$
13. $\frac{9}{11}\sqrt{a} = \sqrt{(\frac{9}{11})^2a} = \sqrt{\frac{81a}{121}}.$
14. $-\frac{1}{2}\sqrt[3]{a^2} = \sqrt[3]{(-\frac{1}{2})^3a^2} = \sqrt[3]{-\frac{a^2}{8}}.$
15. $\frac{3}{5}\sqrt{m^3} = \sqrt{(\frac{3}{5})^2m^3} = \sqrt{\frac{9m^3}{25}}.$
16. $-\frac{1}{2}\sqrt[3]{m^7} = \sqrt[3]{(-\frac{1}{2})^3m^7} = \sqrt[3]{-\frac{m^7}{8}}.$

24. $4\sqrt[5]{686} = 4\sqrt[5]{343 \times 2} = 4\sqrt[5]{343} \times \sqrt[5]{2} = 28\sqrt[5]{2}$.

25. $\sqrt[3]{\frac{27\,a^6b^3}{64\,x^3y^3}} = \sqrt[3]{\frac{27\,a^6 \times b^3}{64\,x^3y^3}} = \sqrt[3]{\frac{27\,a^6}{64\,x^3y^3}} \times \sqrt[3]{b^3} = \frac{3\,a^2}{4\,xy}\sqrt[3]{b^3}$.

26. $\sqrt{\frac{49\,a^3b^3}{36\,x^2y^6}} = \sqrt{\frac{49\,a^2b^3 \times a}{36\,x^2y^6}} = \sqrt{\frac{49\,a^2b^3}{36\,x^2y^6}} \times \sqrt{a} = \frac{7\,ab}{6\,xy^3}\sqrt{a}$.

27. $\sqrt[3]{\frac{512\,x^3}{125\,y^3}} = \sqrt[3]{\frac{512 \times x^3}{125\,y^3}} = \sqrt[3]{\frac{512}{125\,y^3}} \times \sqrt[3]{x^3} = \frac{8}{5\,y}\sqrt[3]{x^3}$.

28. $2\sqrt[5]{\frac{m^6n^3x}{3125}} = 2\sqrt[5]{\frac{m^5 \times mn^3x}{3125}} = 2\sqrt[5]{\frac{m^5}{3125}} \times \sqrt[5]{mn^3x} = \frac{2\,m}{5}\sqrt[5]{mn^3x}$.

29. $3\sqrt[4]{\frac{x^5y^7}{256}} = 3\sqrt[4]{\frac{x^4y^4 \times xy^3}{256}} = 3\sqrt[4]{\frac{x^4y^4}{256}} \times \sqrt[4]{xy^3} = \frac{3\,xy}{4}\sqrt[4]{xy^3}$.

30. $2\sqrt[3]{\frac{(x-y)^3z^3}{(x+y)^3}} = 2\sqrt[3]{\frac{(x-y)^3}{(x+y)^3}} \times \sqrt[3]{z^3} = \frac{2(x-y)}{x+y}\sqrt[3]{z^3}$.

31. $\frac{4\,ab}{5\,c}\sqrt{\frac{75\,c^3d}{16\,a^2b^2}} = \frac{4\,ab}{5\,c}\sqrt{\frac{25\,c^2 \times 3\,d}{16\,a^2b^2}} = \frac{4\,ab}{5\,c}\sqrt{\frac{25\,c^2}{16\,a^2b^2}} \times \sqrt{3\,d} = \sqrt{3\,d}$.

EXERCISE 83.

1. $\sqrt{\frac{1}{2}} = \sqrt{\frac{2}{4}} = \sqrt{2 \times \frac{1}{4}} = \frac{1}{2}\sqrt{2}$.
2. $\sqrt{\frac{1}{3}} = \sqrt{\frac{3}{9}} = \sqrt{3 \times \frac{1}{9}} = \frac{1}{3}\sqrt{3}$.
3. $\sqrt{\frac{1}{5}} = \sqrt{\frac{5}{25}} = \sqrt{5 \times \frac{1}{25}} = \frac{1}{5}\sqrt{5}$.
4. $3\sqrt{\frac{4}{5}} = 3\sqrt{\frac{20}{25}} = 3\sqrt{5 \times \frac{4}{25}} = \frac{6}{5}\sqrt{5}$.
5. $2\sqrt[4]{\frac{5}{32}} = 2\sqrt[4]{\frac{40}{256}} = 2\sqrt[4]{40 \times \frac{1}{256}} = \frac{1}{2}\sqrt[4]{40}$.
6. $3\sqrt{\frac{7}{100}} = 3\sqrt{\frac{35}{400}} = 3\sqrt{35 \times \frac{1}{400}} = \frac{3}{20}\sqrt{35}$.
7. $\sqrt[3]{\frac{5}{3}} = \sqrt[3]{\frac{45}{27}} = \sqrt[3]{45 \times \frac{1}{27}} = \frac{1}{3}\sqrt[3]{45}$.
8. $\sqrt[3]{\frac{9}{16}} = \sqrt[3]{\frac{36}{64}} = \sqrt[3]{36 \times \frac{1}{64}} = \frac{1}{4}\sqrt[3]{36}$.
9. $\sqrt[3]{\frac{7}{686}} = \sqrt[3]{\frac{7}{7^3 \times 2}} = \sqrt[3]{\frac{7 \times 2^2}{7^3 \times 2^3}} = \frac{1}{14}\sqrt[3]{28}$.
10. $2\sqrt[3]{\frac{4}{25}} = 2\sqrt[3]{\frac{20}{125}} = 2\sqrt[3]{20 \times \frac{1}{125}} = \frac{2}{5}\sqrt[3]{20}$.
11. $3\sqrt[5]{\frac{5}{81}} = 3\sqrt[5]{\frac{5 \times 3}{3^4 \times 3}} = \sqrt[5]{15}$.

12. $2\sqrt[5]{\frac{7}{16}} = 2\sqrt[5]{\frac{7\times 2}{2^4\times 2}} = \sqrt[5]{14}.$

13. $\sqrt{\frac{a^4c^2}{b^3}} = \sqrt{\frac{a^4c^2}{b^4}\times b} = \frac{a^2c}{b^2}\sqrt{b}.$

14. $\sqrt[4]{\frac{b^4d^2}{a^3c^3}} = \sqrt[4]{\frac{b^4}{a^4c^4}\times ac^2d^2} = \frac{b}{ac}\sqrt[4]{ac^2d^2}.$

15. $\sqrt[3]{\frac{a^2x^4}{b^4}} = \sqrt[3]{\frac{x^3}{b^6}\times a^2b^2x} = \frac{x}{b^2}\sqrt[3]{a^2b^2x}.$

16. $\sqrt[3]{\frac{7a^2}{125x}} = \sqrt[3]{7a^2x^2\times\frac{1}{125x^3}} = \frac{1}{5x}\sqrt[3]{7a^2x^2}.$

17. $\sqrt{\frac{a^2cy^2}{b^3d^2}} = \sqrt{\frac{a^2y^2}{b^4d^2}\times bc} = \frac{ay}{b^2d}\sqrt{bc}.$

18. $2\sqrt[3]{\frac{3a^3b^2c^2}{4x^2yz^3}} = 2\sqrt[3]{6b^2c^2xy^2\times\frac{a^3}{8x^3y^3z^3}} = \frac{a}{xyz}\sqrt[3]{6b^2c^2xy^2}.$

Exercise 84.

1. $3\sqrt{5} = \sqrt{3^2\times 5} = \sqrt{45}.$
2. $3\sqrt{21} = \sqrt{3^2\times 21} = \sqrt{189}.$
3. $3\sqrt[3]{2} = \sqrt[3]{3^3\times 2} = \sqrt[3]{54}.$
4. $2\sqrt[3]{5} = \sqrt[3]{2^3\times 5} = \sqrt[3]{40}.$
5. $2\sqrt[4]{7} = \sqrt[4]{2^4\times 7} = \sqrt[4]{112}.$
6. $3\sqrt[5]{3} = \sqrt[5]{3^5\times 3} = \sqrt[5]{729}.$
7. $2\sqrt[6]{5} = \sqrt[6]{2^6\times 5} = \sqrt[6]{320}.$
8. $2\sqrt[4]{2} = \sqrt[4]{2^4\times 2} = \sqrt[4]{32}.$
9. $-2\sqrt[3]{y} = \sqrt[3]{(-2)^3y} = \sqrt[3]{-8y}.$
10. $-3\sqrt[5]{y^3} = \sqrt[5]{(-3)^5y^3} = \sqrt[5]{-243y^3}.$
11. $-m\sqrt[3]{10} = \sqrt[3]{(-m)^3\,10} = \sqrt[3]{-10m^3}.$
12. $-2\sqrt[7]{x} = \sqrt[7]{(-2)^7x} = \sqrt[7]{-128x}.$
13. $\frac{9}{11}\sqrt{a} = \sqrt{(\frac{9}{11})^2a} = \sqrt{\frac{81a}{121}}.$
14. $-\frac{1}{2}\sqrt[3]{a^2} = \sqrt[3]{(-\frac{1}{2})^3a^2} = \sqrt[3]{-\frac{a^2}{8}}.$
15. $\frac{3}{5}\sqrt{m^3} = \sqrt{(\frac{3}{5})^2m^3} = \sqrt{\frac{9m^3}{25}}.$
16. $-\frac{1}{2}\sqrt[3]{m^7} = \sqrt[3]{(-\frac{1}{2})^3m^7} = \sqrt[3]{-\frac{m^7}{8}}.$

24. $4\sqrt[5]{686} = 4\sqrt[5]{343 \times 2} = 4\sqrt[5]{343} \times \sqrt[5]{2} = 28\sqrt[5]{2}$.

25. $\sqrt[3]{\frac{27\,a^6b^3}{64\,x^3y^3}} = \sqrt[3]{\frac{27\,a^6 \times b^3}{64\,x^3y^3}} = \sqrt[3]{\frac{27\,a^6}{64\,x^3y^3}} \times \sqrt[3]{b^3} = \frac{3\,a^2}{4\,xy}\sqrt[3]{b^3}$.

26. $\sqrt{\frac{49\,a^2b^2}{36\,x^2y^6}} = \sqrt{\frac{49\,a^2b^2 \times a}{36\,x^2y^6}} = \sqrt{\frac{49\,a^2b^2}{36\,x^2y^6}} \times \sqrt{a} = \frac{7\,ab}{6\,xy^3}\sqrt{a}$.

27. $\sqrt[3]{\frac{512\,x^3}{125\,y^3}} = \sqrt[3]{\frac{512 \times x^3}{125\,y^3}} = \sqrt[3]{\frac{512}{125\,y^3}} \times \sqrt[3]{x^3} = \frac{8}{5\,y}\sqrt[3]{x^3}$.

28. $2\sqrt[5]{\frac{m^6n^3x}{3125}} = 2\sqrt[5]{\frac{m^5 \times mn^3x}{3125}} = 2\sqrt[5]{\frac{m^5}{3125}} \times \sqrt[5]{mn^3x} = \frac{2\,m}{5}\sqrt[5]{mn^3x}$.

29. $3\sqrt[4]{\frac{x^5y^7}{256}} = 3\sqrt[4]{\frac{x^4y^4 \times xy^3}{256}} = 3\sqrt[4]{\frac{x^4y^4}{256}} \times \sqrt[4]{xy^3} = \frac{3\,xy}{4}\sqrt[4]{xy^3}$.

30. $2\sqrt[3]{\frac{(x-y)^5z^2}{(x+y)^3}} = 2\sqrt[3]{\frac{(x-y)^3}{(x+y)^3}} \times \sqrt[3]{z^2} = \frac{2(x-y)}{x+y}\sqrt[3]{z^2}$.

31. $\frac{4\,ab}{5\,c}\sqrt{\frac{75\,c^3d}{16\,a^2b^2}} = \frac{4\,ab}{5\,c}\sqrt{\frac{25\,c^2 \times 3\,d}{16\,a^2b^2}} = \frac{4\,ab}{5\,c}\sqrt{\frac{25\,c^2}{16\,a^2b^2}} \times \sqrt{3\,d} = \sqrt{3\,d}$.

EXERCISE 83.

1. $\sqrt{\frac{1}{2}} = \sqrt{\frac{2}{4}} = \sqrt{2 \times \frac{1}{4}} = \frac{1}{2}\sqrt{2}$.
2. $\sqrt{\frac{1}{3}} = \sqrt{\frac{3}{9}} = \sqrt{3 \times \frac{1}{9}} = \frac{1}{3}\sqrt{3}$.
3. $\sqrt{\frac{1}{5}} = \sqrt{\frac{5}{25}} = \sqrt{5 \times \frac{1}{25}} = \frac{1}{5}\sqrt{5}$.
4. $3\sqrt{\frac{4}{5}} = 3\sqrt{\frac{20}{25}} = 3\sqrt{5 \times \frac{4}{25}} = \frac{6}{5}\sqrt{5}$.
5. $2\sqrt[4]{\frac{5}{32}} = 2\sqrt[4]{\frac{40}{256}} = 2\sqrt[4]{40 \times \frac{1}{256}} = \frac{1}{2}\sqrt[4]{40}$.
6. $3\sqrt{\frac{7}{100}} = 3\sqrt{\frac{35}{400}} = 3\sqrt{35 \times \frac{1}{400}} = \frac{3}{20}\sqrt{35}$.
7. $\sqrt[3]{\frac{5}{8}} = \sqrt[3]{\frac{45}{216}} = \sqrt[3]{45 \times \frac{1}{216}} = \frac{1}{6}\sqrt[3]{45}$.
8. $\sqrt[3]{\frac{9}{16}} = \sqrt[3]{\frac{36}{64}} = \sqrt[3]{36 \times \frac{1}{64}} = \frac{1}{4}\sqrt[3]{36}$.
9. $\sqrt[3]{\frac{7}{686}} = \sqrt[3]{\frac{7}{7^3 \times 2}} = \sqrt[3]{\frac{7 \times 2^2}{7^3 \times 2^3}} = \frac{1}{14}\sqrt[3]{28}$.
10. $2\sqrt[3]{\frac{4}{125}} = 2\sqrt[3]{\frac{20}{1250}} = 2\sqrt[3]{20 \times \frac{1}{1250}} = \frac{2}{5}\sqrt[3]{20}$.
11. $3\sqrt[5]{\frac{5}{81}} = 3\sqrt[5]{\frac{5 \times 3}{3^4 \times 3}} = \sqrt[5]{15}$.

12. $2\sqrt[5]{\frac{7}{16}} = 2\sqrt[5]{\frac{7\times 2}{2^4\times 2}} = \sqrt[5]{14}.$

13. $\sqrt{\frac{a^4c^3}{b^3}} = \sqrt{\frac{a^4c^3}{b^4}\times b} = \frac{a^2c}{b^2}\sqrt{b}.$

14. $\sqrt[4]{\frac{b^4d^2}{a^3c^2}} = \sqrt[4]{\frac{b^4}{a^4c^4}\times ac^2d^2} = \frac{b}{ac}\sqrt[4]{ac^2d^2}.$

15. $\sqrt[3]{\frac{a^2x^4}{b^4}} = \sqrt[3]{\frac{x^3}{b^6}\times a^2b^2x} = \frac{x}{b^2}\sqrt[3]{a^2b^2x}.$

16. $\sqrt[3]{\frac{7a^2}{125x}} = \sqrt[3]{7a^2x^2\times\frac{1}{125x^3}} = \frac{1}{5x}\sqrt[3]{7a^2x^2}.$

17. $\sqrt{\frac{a^2cy^2}{b^3d^2}} = \sqrt{\frac{a^2y^2}{b^4d^2}\times bc} = \frac{ay}{b^2d}\sqrt{bc}.$

18. $2\sqrt[3]{\frac{3a^3b^2c^3}{4x^2yz^3}} = 2\sqrt[3]{6b^2c^3xy^2\times\frac{a^3}{8x^3y^3z^3}} = \frac{a}{xyz}\sqrt[3]{6b^2c^3xy^3}.$

Exercise 84.

1. $3\sqrt{5} = \sqrt{3^2\times 5} = \sqrt{45}.$
2. $3\sqrt{21} = \sqrt{3^2\times 21} = \sqrt{189}.$
3. $3\sqrt[5]{2} = \sqrt[5]{3^5\times 2} = \sqrt[5]{54}.$
4. $2\sqrt[3]{5} = \sqrt[3]{2^3\times 5} = \sqrt[3]{40}.$
5. $2\sqrt[4]{7} = \sqrt[4]{2^4\times 7} = \sqrt[4]{112}.$
6. $3\sqrt[5]{3} = \sqrt[5]{3^5\times 3} = \sqrt[5]{729}.$
7. $2\sqrt[6]{5} = \sqrt[6]{2^6\times 5} = \sqrt[6]{320}.$
8. $2\sqrt[4]{2} = \sqrt[4]{2^4\times 2} = \sqrt[4]{32}.$
9. $-2\sqrt[3]{y} = \sqrt[3]{(-2)^3y} = \sqrt[3]{-8y}.$
10. $-3\sqrt[5]{y^3} = \sqrt[5]{(-3)^5y^3} = \sqrt[5]{-243y^3}.$
11. $-m\sqrt[3]{10} = \sqrt[3]{(-m)^3\,10} = \sqrt[3]{-10m^3}.$
12. $-2\sqrt[7]{x} = \sqrt[7]{(-2)^7x} = \sqrt[7]{-128x}.$
13. $\frac{9}{11}\sqrt{a} = \sqrt{(\frac{9}{11})^2a} = \sqrt{\frac{81a}{121}}.$
14. $-\frac{1}{2}\sqrt[3]{a^2} = \sqrt[3]{(-\frac{1}{2})^3a^2} = \sqrt[3]{-\frac{a^2}{8}}.$
15. $\frac{3}{5}\sqrt{m^3} = \sqrt{(\frac{3}{5})^2m^3} = \sqrt{\frac{9m^3}{25}}.$
16. $-\frac{1}{2}\sqrt[3]{m^7} = \sqrt[3]{(-\frac{1}{2})^3m^7} = \sqrt[3]{-\frac{m^7}{8}}.$

24. $4\sqrt[3]{686} = 4\sqrt[3]{343 \times 2} = 4\sqrt[3]{343} \times \sqrt[3]{2} = 28\sqrt[3]{2}$.

25. $\sqrt[3]{\frac{27a^6b^3}{64x^3y^3}} = \sqrt[3]{\frac{27a^6 \times b^3}{64x^3y^3}} = \sqrt[3]{\frac{27a^6}{64x^3y^3}} \times \sqrt[3]{b^3} = \frac{3a^2}{4xy}\sqrt[3]{b^3}$.

26. $\sqrt{\frac{49a^3b^2}{36x^2y^6}} = \sqrt{\frac{49a^2b^2 \times a}{36x^2y^6}} = \sqrt{\frac{49a^2b^2}{36x^2y^6}} \times \sqrt{a} = \frac{7ab}{6xy^3}\sqrt{a}$.

27. $\sqrt[3]{\frac{512x^3}{125y^3}} = \sqrt[3]{\frac{512 \times x^3}{125y^3}} = \sqrt[3]{\frac{512}{125y^3}} \times \sqrt[3]{x^3} = \frac{8}{5y}\sqrt[3]{x^3}$.

28. $2\sqrt[5]{\frac{m^6n^3x}{3125}} = 2\sqrt[5]{\frac{m^5 \times mn^3x}{3125}} = 2\sqrt[5]{\frac{m^5}{3125}} \times \sqrt[5]{mn^3x} = \frac{2m}{5}\sqrt[5]{mn^3x}$.

29. $3\sqrt[4]{\frac{x^5y^7}{256}} = 3\sqrt[4]{\frac{x^4y^4 \times xy^3}{256}} = 3\sqrt[4]{\frac{x^4y^4}{256}} \times \sqrt[4]{xy^3} = \frac{3xy}{4}\sqrt[4]{xy^3}$.

30. $2\sqrt[3]{\frac{(x-y)^3z^3}{(x+y)^3}} = 2\sqrt[3]{\frac{(x-y)^3}{(x+y)^3}} \times \sqrt[3]{z^3} = \frac{2(x-y)}{x+y}\sqrt[3]{z^3}$.

31. $\frac{4ab}{5c}\sqrt{\frac{75c^2d}{16a^2b^2}} = \frac{4ab}{5c}\sqrt{\frac{25c^2 \times 3d}{16a^2b^2}} = \frac{4ab}{5c}\sqrt{\frac{25c^2}{16a^2b^2}} \times \sqrt{3d} = \sqrt{3d}$.

Exercise 83.

1. $\sqrt{\frac{1}{2}} = \sqrt{\frac{2}{4}} = \sqrt{2 \times \frac{1}{4}} = \frac{1}{2}\sqrt{2}$.
2. $\sqrt{\frac{1}{3}} = \sqrt{\frac{3}{9}} = \sqrt{3 \times \frac{1}{9}} = \frac{1}{3}\sqrt{3}$.
3. $\sqrt{\frac{1}{5}} = \sqrt{\frac{5}{25}} = \sqrt{5 \times \frac{1}{25}} = \frac{1}{5}\sqrt{5}$.
4. $3\sqrt{\frac{4}{5}} = 3\sqrt{\frac{20}{25}} = 3\sqrt{5 \times \frac{4}{25}} = \frac{6}{5}\sqrt{5}$.
5. $2\sqrt[4]{\frac{5}{32}} = 2\sqrt[4]{\frac{40}{256}} = 2\sqrt[4]{40 \times \frac{1}{256}} = \frac{1}{2}\sqrt[4]{40}$.
6. $3\sqrt{\frac{7}{80}} = 3\sqrt{\frac{35}{400}} = 3\sqrt{35 \times \frac{1}{400}} = \frac{3}{20}\sqrt{35}$.
7. $\sqrt[3]{\frac{5}{9}} = \sqrt[3]{\frac{45}{243}} = \sqrt[3]{45 \times \frac{1}{243}} = \frac{1}{3}\sqrt[3]{45}$.
8. $\sqrt[3]{\frac{9}{16}} = \sqrt[3]{\frac{36}{64}} = \sqrt[3]{36 \times \frac{1}{64}} = \frac{1}{4}\sqrt[3]{36}$.
9. $\sqrt[3]{\frac{7}{686}} = \sqrt[3]{\frac{7}{7^3 \times 2}} = \sqrt[3]{\frac{7 \times 2^3}{7^3 \times 2^3}} = \frac{1}{14}\sqrt[3]{28}$.
10. $2\sqrt[3]{\frac{4}{125}} = 2\sqrt[3]{\frac{20}{1125}} = 2\sqrt[3]{20 \times \frac{1}{1125}} = \frac{2}{15}\sqrt[3]{20}$.
11. $3\sqrt[5]{\frac{5}{81}} = 3\sqrt[5]{\frac{5 \times 3}{3^4 \times 3}} = \sqrt[5]{15}$.

12. $2\sqrt[5]{\frac{7}{16}} = 2\sqrt[5]{\frac{7\times 2}{2^4\times 2}} = \sqrt[5]{14}.$

13. $\sqrt{\frac{a^4c^2}{b^3}} = \sqrt{\frac{a^4c^2}{b^4}\times b} = \frac{a^2c}{b^2}\sqrt{b}.$

14. $\sqrt[4]{\frac{b^4d^2}{a^3c^2}} = \sqrt[4]{\frac{b^4}{a^4c^4}\times ac^2d^2} = \frac{b}{ac}\sqrt[4]{ac^2d^2}.$

15. $\sqrt[3]{\frac{a^2x^4}{b^4}} = \sqrt[3]{\frac{x^3}{b^6}\times a^2b^2x} = \frac{x}{b^2}\sqrt[3]{a^2b^2x}.$

16. $\sqrt[3]{\frac{7a^2}{125x}} = \sqrt[3]{7a^2x^2\times\frac{1}{125x^3}} = \frac{1}{5x}\sqrt[3]{7a^2x^2}.$

17. $\sqrt{\frac{a^2cy^2}{b^3d^2}} = \sqrt{\frac{a^2y^2}{b^4d^2}\times bc} = \frac{ay}{b^2d}\sqrt{bc}.$

18. $2\sqrt[3]{\frac{3a^3b^2c^2}{4x^2yz^3}} = 2\sqrt[3]{6b^2c^3xy^2\times\frac{a^3}{8x^3y^3z^3}} = \frac{a}{xyz}\sqrt[3]{6b^2c^3xy^3}.$

Exercise 84.

1. $3\sqrt{5} = \sqrt{3^2\times 5} = \sqrt{45}.$
2. $3\sqrt{21} = \sqrt{3^2\times 21} = \sqrt{189}.$
3. $3\sqrt[3]{2} = \sqrt[3]{3^3\times 2} = \sqrt[3]{54}.$
4. $2\sqrt[3]{5} = \sqrt[3]{2^3\times 5} = \sqrt[3]{40}.$
5. $2\sqrt[4]{7} = \sqrt[4]{2^4\times 7} = \sqrt[4]{112}.$
6. $3\sqrt[5]{3} = \sqrt[5]{3^5\times 3} = \sqrt[5]{729}.$
7. $2\sqrt[6]{5} = \sqrt[6]{2^6\times 5} = \sqrt[6]{320}.$
8. $2\sqrt[4]{2} = \sqrt[4]{2^4\times 2} = \sqrt[4]{32}.$
9. $-2\sqrt[3]{y} = \sqrt[3]{(-2)^3y} = \sqrt[3]{-8y}.$
10. $-3\sqrt[5]{y^3} = \sqrt[5]{(-3)^5y^3} = \sqrt[5]{-243y^3}.$
11. $-m\sqrt[3]{10} = \sqrt[3]{(-m)^3\,10} = \sqrt[3]{-10m^3}.$
12. $-2\sqrt[7]{x} = \sqrt[7]{(-2)^7x} = \sqrt[7]{-128x}.$
13. $\frac{9}{11}\sqrt{a} = \sqrt{(\frac{9}{11})^2a} = \sqrt{\frac{81a}{121}}.$
14. $-\frac{1}{2}\sqrt[3]{a^2} = \sqrt[3]{(-\frac{1}{2})^3a^2} = \sqrt[3]{-\frac{a^2}{8}}.$
15. $\frac{2}{5}\sqrt{m^3} = \sqrt{(\frac{2}{5})^2m^3} = \sqrt{\frac{9m^3}{25}}.$
16. $-\frac{1}{2}\sqrt[3]{m^7} = \sqrt[3]{(-\frac{1}{2})^3m^7} = \sqrt[3]{-\frac{m^7}{8}}.$

Exercise 85.

1. $\sqrt[4]{3} = 3^{\frac{1}{4}} = 3^{\frac{3}{12}} = \sqrt[12]{3^3} = \sqrt[12]{27}$.
   $\sqrt[6]{2} = 2^{\frac{1}{6}} = 2^{\frac{2}{12}} = \sqrt[12]{2^2} = \sqrt[12]{4}$.

2. $\sqrt[3]{7} = 7^{\frac{1}{3}} = 7^{\frac{2}{6}} = \sqrt[6]{7^2} = \sqrt[6]{49}$.
   $\sqrt{6} = 6^{\frac{1}{2}} = 6^{\frac{3}{6}} = \sqrt[6]{6^3} = \sqrt[6]{216}$.

3. $\sqrt{3} = 3^{\frac{1}{2}} = 3^{\frac{3}{6}} = \sqrt[6]{3^3} = \sqrt[6]{27}$.
   $\sqrt[3]{4} = 4^{\frac{1}{3}} = 4^{\frac{2}{6}} = \sqrt[6]{4^2} = \sqrt[6]{16}$.

4. $\sqrt[4]{a} = a^{\frac{1}{4}} = a^{\frac{3}{12}} = \sqrt[12]{a^3}$.
   $\sqrt[3]{b^2} = b^{\frac{2}{3}} = b^{\frac{8}{12}} = \sqrt[12]{b^8}$.

5. $\sqrt{5} = 5^{\frac{1}{2}} = 5^{\frac{3}{6}} = \sqrt[6]{125}$.
   $\sqrt[6]{25} = \sqrt[6]{25}$.

6. $3^{\frac{1}{2}} = 3^{\frac{6}{12}} = \sqrt[12]{3^6} = \sqrt[12]{729}$.
   $3^{\frac{2}{3}} = 3^{\frac{8}{12}} = \sqrt[12]{3^8} = \sqrt[12]{6561}$.
   $3^{\frac{3}{4}} = 3^{\frac{9}{12}} = \sqrt[12]{3^9} = \sqrt[12]{19683}$.

7. $\sqrt[3]{2} = 2^{\frac{1}{3}} = 2^{\frac{4}{12}} = \sqrt[12]{2^4} = \sqrt[12]{16}$.
   $\sqrt[4]{3} = 3^{\frac{1}{4}} = 3^{\frac{3}{12}} = \sqrt[12]{3^3} = \sqrt[12]{27}$.
   $\sqrt[6]{5} = 5^{\frac{1}{6}} = 5^{\frac{2}{12}} = \sqrt[12]{5^2} = \sqrt[12]{25}$.

8. $\sqrt[6]{a^2} = a^{\frac{2}{6}} = a^{\frac{1}{3}} = a^{\frac{7}{21}} = \sqrt[21]{a^7}$.
   $\sqrt[3]{b} = b^{\frac{1}{3}} = b^{\frac{7}{21}} = \sqrt[21]{b^7}$.
   $\sqrt[7]{c} = c^{\frac{1}{7}} = c^{\frac{3}{21}} = \sqrt[21]{c^3}$.

9. $\sqrt[5]{a^4} = a^{\frac{4}{5}} = a^{\frac{16}{20}} = \sqrt[20]{a^{16}}$.
   $\sqrt[10]{c^3} = c^{\frac{3}{10}} = c^{\frac{6}{20}} = \sqrt[20]{c^6}$.
   $\sqrt[4]{x^3} = x^{\frac{3}{4}} = x^{\frac{15}{20}} = \sqrt[20]{x^{15}}$.

10. $\sqrt[4]{x^2y} = (x^2y)^{\frac{1}{4}} = (x^2y)^{\frac{3}{12}} = \sqrt[12]{x^6y^3}$.
    $\sqrt[3]{abc} = (abc)^{\frac{1}{3}} = (abc)^{\frac{4}{12}} = \sqrt[12]{a^4b^4c^4}$.
    $\sqrt{2z} = (2z)^{\frac{1}{2}} = (2z)^{\frac{6}{12}} = \sqrt[12]{64z^6}$.

11. $\sqrt[5]{x-y} = (x-y)^{\frac{1}{5}} = (x-y)^{\frac{3}{15}} = \sqrt[15]{(x-y)^3}.$

$\sqrt[3]{x+y} = (x+y)^{\frac{1}{3}} = (x+y)^{\frac{5}{15}} = \sqrt[15]{(x+y)^5}.$

12. $\sqrt[3]{a+b} = (a+b)^{\frac{1}{3}} = (a+b)^{\frac{4}{12}} = \sqrt[12]{(a+b)^4}.$

$\sqrt[4]{a-b} = (a-b)^{\frac{1}{4}} = (a-b)^{\frac{3}{12}} = \sqrt[12]{(a-b)^3}.$

13. $2\sqrt[3]{3} = \sqrt[3]{24} = 24^{\frac{1}{3}} = 24^{\frac{2}{6}} = \sqrt[6]{24^2} = \sqrt[6]{576}.$

$3\sqrt{2} = \sqrt{18} = 18^{\frac{1}{2}} = 18^{\frac{3}{6}} = \sqrt[6]{18^3} = \sqrt[6]{5832}.$

$\frac{5}{2}\sqrt[4]{4} = \frac{5}{2}\sqrt{2} = \sqrt{\frac{25}{4}} = (\frac{25}{4})^{\frac{1}{2}} = (\frac{25}{4})^{\frac{3}{6}} = \sqrt[6]{(\frac{25}{4})^3} = \sqrt[6]{1953\frac{1}{8}}.$

Therefore the order of descending magnitude is $3\sqrt{2}$, $\frac{5}{2}\sqrt[4]{4}$, $2\sqrt[3]{3}$.

14. $\sqrt{\frac{8}{5}} = (\frac{8}{5})^{\frac{1}{2}} = (\frac{8}{5})^{\frac{3}{6}} = \sqrt[6]{(\frac{8}{5})^3} = \sqrt[6]{\frac{27}{125}}.$

$\sqrt[3]{\frac{14}{15}} = (\frac{14}{15})^{\frac{1}{3}} = (\frac{14}{15})^{\frac{2}{6}} = \sqrt[6]{(\frac{14}{15})^2} = \sqrt[6]{\frac{196}{225}}.$

As $\frac{196}{225}$ is greater than $\frac{27}{125}$, the order of magnitude is $\sqrt[3]{\frac{14}{15}}$, $\sqrt{\frac{8}{5}}$.

15. $2\sqrt[3]{22} = \sqrt[3]{176} = 176^{\frac{1}{3}} = 176^{\frac{2}{6}} = \sqrt[6]{176^2} = \sqrt[6]{30976}.$

$3\sqrt[3]{7} = \sqrt[3]{189} = 189^{\frac{1}{3}} = 189^{\frac{2}{6}} = \sqrt[6]{189^2} = \sqrt[6]{35721}.$

$4\sqrt{2} = \sqrt{32} = 32^{\frac{1}{2}} = 32^{\frac{3}{6}} = \sqrt[6]{32^3} = \sqrt[6]{32768}.$

Therefore the order of magnitude is $3\sqrt[3]{7}$, $4\sqrt{2}$, $2\sqrt[3]{22}$.

16. $3\sqrt{19} = \sqrt{171} = 171^{\frac{1}{2}} = 171^{\frac{3}{6}} = \sqrt[6]{171^3} = \sqrt[6]{5000211}.$

$5\sqrt[3]{2} = \sqrt[3]{250} = 250^{\frac{1}{3}} = 250^{\frac{2}{6}} = \sqrt[6]{250^2} = \sqrt[6]{62500}.$

$3\sqrt[3]{3} = \sqrt[3]{81} = 81^{\frac{1}{3}} = 81^{\frac{2}{6}} = \sqrt[6]{81^2} = \sqrt[6]{6561}.$

Therefore the order of magnitude $3\sqrt{19}$, $5\sqrt[3]{2}$, $3\sqrt[3]{3}$.

Exercise 86.

1. $8\sqrt{11} + 7\sqrt{11} - 10\sqrt{11} = (8 + 7 - 10)\sqrt{11} = 5\sqrt{11}.$

2. $3\sqrt{5} - 5\sqrt{5} + 7\sqrt{5} = (3 - 5 + 7)\sqrt{5} = 5\sqrt{5}.$

3. $\sqrt{27} + 2\sqrt{48} + 3\sqrt{108} = 3\sqrt{3} + 8\sqrt{3} + 18\sqrt{3}$

$= (3 + 8 + 18)\sqrt{3} = 29\sqrt{3}.$

4. $\sqrt[3]{128} + \sqrt[3]{686} + \sqrt[3]{16} = 4\sqrt[3]{2} + 7\sqrt[3]{2} + 2\sqrt[3]{2}$
$= (4 + 7 + 2)\sqrt[3]{2} = 13\sqrt[3]{2}.$

5. $12\sqrt{72} - 3\sqrt{128} = 72\sqrt{2} - 24\sqrt{2} = 48\sqrt{2}.$

6. $2\sqrt{3} + 3\sqrt{1\tfrac{1}{3}} - \sqrt{5\tfrac{1}{3}} = 2\sqrt{3} + 3\sqrt{\tfrac{4}{3} \times 3} - \sqrt{\tfrac{16}{3} \times 3}$
$= 2\sqrt{3} + 2\sqrt{3} - \tfrac{4}{3}\sqrt{3} = 2\tfrac{2}{3}\sqrt{3}.$

7. $\sqrt{1000} + \sqrt{50} + \sqrt{288} = 10\sqrt{10} + 5\sqrt{2} + 12\sqrt{2} = 10\sqrt{10} + 17\sqrt{2}.$

8. $\sqrt[3]{54} + 3\sqrt[3]{16} + \sqrt[3]{432} = 3\sqrt[3]{2} + 6\sqrt[3]{2} + 6\sqrt[3]{2} = 15\sqrt[3]{2}.$

9. $7\sqrt[3]{81} - 3\sqrt[3]{1029} = 21\sqrt[3]{3} - 21\sqrt[3]{3} = 0.$

10. $\sqrt{\tfrac{5}{3}} + \sqrt{60} - \sqrt{15} - \sqrt{\tfrac{3}{5}} = \tfrac{1}{3}\sqrt{15} + 2\sqrt{15} - 1\sqrt{15} - \tfrac{1}{5}\sqrt{15}$
$= 1\tfrac{2}{15}\sqrt{15}.$

11. $\sqrt{\dfrac{a^4c}{b^3}} - \sqrt{\dfrac{a^2c^3}{bd^2}} - \sqrt{\dfrac{a^2cd^2}{bm^2}} = \dfrac{a^2}{b^2}\sqrt{bc} - \dfrac{ac}{bd}\sqrt{bc} - \dfrac{ad}{bm}\sqrt{bc}$
$= \left(\dfrac{a^2}{b^2} - \dfrac{ac}{bd} - \dfrac{ad}{bm}\right)\sqrt{bc}$
$= \dfrac{a}{b}\left(\dfrac{a}{b} - \dfrac{c}{d} - \dfrac{d}{m}\right)\sqrt{bc}.$

12. $\sqrt{\tfrac{2}{5}} + \sqrt{\tfrac{1}{10}} - \sqrt{\tfrac{1}{40}} = \tfrac{1}{5}\sqrt{10} + \tfrac{1}{10}\sqrt{10} - \tfrac{1}{20}\sqrt{10} = \tfrac{1}{4}\sqrt{10}.$

13. $\sqrt{4a^3b} + \sqrt{25ab^3} - (a - 5b)\sqrt{ab} = 2a\sqrt{ab} + 5b\sqrt{ab} - (a - 5b)\sqrt{ab}$
$= (a + 10b)\sqrt{ab}.$

14. $c\sqrt[5]{a^6b^7c^3} - a\sqrt[5]{ab^7c^8} + b\sqrt[5]{a^6b^2c^8}$
$= abc\sqrt[5]{ab^2c^3} - abc\sqrt[5]{ab^2c^3} + abc\sqrt[5]{ab^2c^3} = abc\sqrt[5]{ab^2c^3}.$

15. $2\sqrt[3]{40} + 3\sqrt[3]{108} + \sqrt[3]{500} - \sqrt[3]{320} - 2\sqrt[3]{1372}$
$= 4\sqrt[3]{5} + 9\sqrt[3]{4} + 5\sqrt[3]{4} - 4\sqrt[3]{5} - 14\sqrt[3]{4} = 0.$

16. $\sqrt{363} - 2\sqrt{243} + \sqrt{108} - 2\sqrt{147}$
$= 11\sqrt{3} - 18\sqrt{3} + 6\sqrt{3} - 14\sqrt{3} = -15\sqrt{3}.$

17. $\sqrt[3]{189} - 2\sqrt[3]{448} + \sqrt[3]{875} + \sqrt[3]{1512}$
$= 3\sqrt[3]{7} - 8\sqrt[3]{7} + 5\sqrt[3]{7} + 6\sqrt[3]{7} = 6\sqrt[3]{7}.$

18. $\sqrt[4]{162} - \sqrt[4]{512} + 2\sqrt[4]{32} - \sqrt[4]{1250} = 3\sqrt[4]{2} - 4\sqrt[4]{2} + 4\sqrt[4]{2} - 5\sqrt[4]{2}$
$= -2\sqrt[4]{2}.$

19. $\sqrt[3]{-81} - 3\sqrt[3]{-24} + 2\sqrt[3]{192} = -3\sqrt[3]{3} + 6\sqrt[3]{3} + 8\sqrt[3]{3} = 11\sqrt[3]{3}.$

20. $\sqrt{20} + \sqrt{45} - \sqrt{\tfrac{4}{5}} = 2\sqrt{5} + 3\sqrt{5} - \tfrac{2}{5}\sqrt{5} = 4\tfrac{3}{5}\sqrt{5}.$

21. $2\sqrt[3]{a^3b^2} + \sqrt[3]{8b^5} - \frac{1}{2}\sqrt[3]{\frac{a^6}{b}} = 2a\sqrt[3]{b^2} + 2b\sqrt[3]{b^2} - \frac{a^2}{2b}\sqrt[3]{b^2}$
$= \left(2a + 2b - \frac{a^2}{2b}\right)\sqrt[3]{b^2}.$

22. $\sqrt{50} + \tfrac{5}{2}\sqrt{288} - \frac{1}{\sqrt{2}} - \frac{3}{\sqrt{450}} = 5\sqrt{2} + 30\sqrt{2} - \tfrac{1}{2}\sqrt{2} - \tfrac{1}{10}\sqrt{2}$
$= 34\tfrac{2}{5}\sqrt{2}.$

23. $\sqrt{1701} + \tfrac{1}{4}\sqrt{84} - \tfrac{1}{5}\sqrt{525} = 9\sqrt{21} + \tfrac{1}{2}\sqrt{21} - 1\sqrt{21} = 8\tfrac{1}{2}\sqrt{21}.$

Exercise 87.

1. $3\sqrt{2} \times 4\sqrt{6} = 12\sqrt{12} = 24\sqrt{3}.$

2. $2\sqrt{5} \times 3\sqrt{15} = 6\sqrt{75} = 30\sqrt{3}.$

3. $2\sqrt{10} \times 5\sqrt{14} = 10\sqrt{140} = 20\sqrt{35}.$

4. $3\sqrt{27} \times 7\sqrt{48} = 9\sqrt{3} \times 28\sqrt{3} = 9 \times 28 \times 3 = 756.$

5. $2\sqrt[3]{4} \times 5\sqrt[3]{32} = 2\sqrt[3]{4} \times 10\sqrt[3]{4} = 20\sqrt[3]{16} = 40\sqrt[3]{2}.$

6. $\tfrac{2}{7}\sqrt{10} \times \tfrac{7}{10}\sqrt{15} = \tfrac{1}{5}\sqrt{150} = \sqrt{6}.$

7. $5\sqrt{\tfrac{2}{7}} \times \tfrac{3}{7}\sqrt{162} = 5\sqrt{\tfrac{2}{7}} \times \tfrac{27}{7}\sqrt{2} = \tfrac{135}{7}\sqrt{\tfrac{4}{7}} = \tfrac{135}{49}\sqrt{28}.$

8. $\tfrac{3}{8}\sqrt{21} \times \tfrac{9}{10}\sqrt{\tfrac{7}{20}} = \tfrac{27}{80}\sqrt{\tfrac{147}{20}} = \tfrac{189}{800}\sqrt{\tfrac{3}{20}} = \tfrac{189}{8000}\sqrt{15}.$

9. $\sqrt[3]{108} \times 5\sqrt{32} = 3\sqrt[3]{4} \times 20\sqrt{2} = 3\sqrt[6]{16} \times 20\sqrt[6]{8} = 60\sqrt[6]{128}$
$= 60\sqrt[6]{2^7} = 120\sqrt[6]{2}.$

10. $5\sqrt[3]{54} \times 7\sqrt{48} = 15\sqrt[3]{2} \times 28\sqrt{3} = 15\sqrt[6]{4} \times 28\sqrt[6]{27} = 420\sqrt[6]{108}.$

Exercise 88.

1. $(2\sqrt{x}-7)\times 3\sqrt{x}$.

$$\begin{array}{r} 2\sqrt{x}-7 \\ 3\sqrt{x} \\ \hline 6x-21\sqrt{x} \end{array}$$

2. $(\sqrt{a}-\sqrt{b})^2$.

$$\begin{array}{r} a^{\frac{1}{2}}-b^{\frac{1}{2}} \\ a^{\frac{1}{2}}-b^{\frac{1}{2}} \\ \hline a- a^{\frac{1}{2}}b^{\frac{1}{2}} \\ \quad - a^{\frac{1}{2}}b^{\frac{1}{2}}+b \\ \hline a-2a^{\frac{1}{2}}b^{\frac{1}{2}}+b \end{array}$$

3. $(3\sqrt{5}-7\sqrt{2})^2$.

$$\begin{array}{r} 3\sqrt{5}-7\sqrt{2} \\ 3\sqrt{5}-7\sqrt{2} \\ \hline 45-21\sqrt{10} \\ \quad -21\sqrt{10}+98 \\ \hline 143-42\sqrt{10} \end{array}$$

4. $(\sqrt{7}+3\sqrt{3})(\sqrt{7}-2\sqrt{3})$.

$$\begin{array}{r} \sqrt{7}+3\sqrt{3} \\ \sqrt{7}-2\sqrt{3} \\ \hline 7+3\sqrt{21} \\ \quad -2\sqrt{21}-18 \\ \hline -11+\sqrt{21} \end{array}$$

5. $(3\sqrt{5}-\sqrt{2})(\sqrt{5}-3\sqrt{2})$.

$$\begin{array}{r} 3\sqrt{5}-\sqrt{2} \\ \sqrt{5}-3\sqrt{2} \\ \hline 15- 1\sqrt{10} \\ \quad - 9\sqrt{10}+6 \\ \hline 21-10\sqrt{10} \end{array}$$

6. $(\sqrt{2}+\sqrt{3}-\sqrt{5})^2$.

$$\begin{array}{r} \sqrt{2}+\sqrt{3}-\sqrt{5} \\ \sqrt{2}+\sqrt{3}-\sqrt{5} \\ \hline 2+\sqrt{6}-\sqrt{10} \\ \quad +\sqrt{6} \qquad +3-\sqrt{15} \\ \qquad -\sqrt{10} \qquad -\sqrt{15}+5 \\ \hline 10+2\sqrt{6}-2\sqrt{10}-2\sqrt{15} \end{array}$$

7. $(\sqrt{5}+3\sqrt{2}+\sqrt{7})^2$.

$$\begin{array}{r} \sqrt{5}+3\sqrt{2}+\sqrt{7} \\ \sqrt{5}+3\sqrt{2}+\sqrt{7} \\ \hline 5+3\sqrt{10}+\sqrt{35} \\ \quad +3\sqrt{10} \qquad +18+3\sqrt{14} \\ \qquad +\sqrt{35} \qquad +3\sqrt{14}+7 \\ \hline 30+6\sqrt{10}+2\sqrt{35} \qquad +6\sqrt{14} \end{array}$$

8. $(2\sqrt{5}-\sqrt{2}-\sqrt{7})^2$.

$$\begin{array}{r} 2\sqrt{5}-\sqrt{2}-\sqrt{7} \\ 2\sqrt{5}-\sqrt{2}-\sqrt{7} \\ \hline 20-2\sqrt{10}-2\sqrt{35} \\ -2\sqrt{10}\qquad +2+\sqrt{14} \\ -2\sqrt{35}\qquad +\sqrt{14}+7 \\ \hline 29-4\sqrt{10}-4\sqrt{35}+2\sqrt{14} \end{array}$$

9. $(2\sqrt{x}+\sqrt{3-2x})^2$.

$$\begin{array}{r} 2\sqrt{x}+\sqrt{3-2x} \\ 2\sqrt{x}+\sqrt{3-2x} \\ \hline 4x+2\sqrt{3x-2x^2} \\ +2\sqrt{3x-2x^2}+3-2x \\ \hline 3+2x+4\sqrt{3x-2x^2} \end{array}$$

10. $(2\sqrt{a^2+b^2}-3\sqrt{a^2-b^2})^2$.

$$\begin{array}{r} 2\sqrt{a^2+b^2}-3\sqrt{a^2-b^2} \\ 2\sqrt{a^2+b^2}-3\sqrt{a^2-b^2} \\ \hline 4(a^2+b^2)-6\sqrt{a^4-b^4} \\ -6\sqrt{a^4-b^4}+9(a^2-b^2) \\ \hline 4a^2+4b^2-12\sqrt{a^4-b^4}+9a^2-9b^2 \\ =13a^2-5b^2-12\sqrt{a^4-b^4}. \end{array}$$

Exercise 89.

1. $\sqrt{162}+\sqrt{2}=\sqrt{81}=9$.
2. $\sqrt[3]{81}+\sqrt[3]{3}=\sqrt[3]{27}=3$.
3. $\sqrt{2a^{11}}+\sqrt{a^3}=\sqrt{2a^8}=a^4\sqrt{2}$.
4. $\sqrt{\frac{1}{3}}+\sqrt{\frac{8}{7}}=\sqrt{\frac{1}{3}}\times\sqrt{\frac{7}{8}}=\sqrt{\frac{7}{9}}=\frac{1}{3}\sqrt{7}$.
5. $\sqrt{\frac{5}{12}}+\sqrt{\frac{8}{5}}=\sqrt{\frac{5}{12}}\times\sqrt{\frac{5}{8}}=\sqrt{\frac{25}{96}}=\frac{5}{8}$.

6. $2\sqrt{\frac{1}{2}} + \frac{1}{2}\sqrt{\frac{1}{3}} = 2 \times \frac{1}{2}\sqrt{\frac{1}{2} \times \frac{1}{3}} = \frac{1}{2}\sqrt{\frac{1}{6}} = \frac{1}{2}\sqrt{3}$.

7. $\sqrt{5} + \sqrt[3]{4} = \sqrt[6]{125} + \sqrt[6]{16} = \sqrt[6]{\frac{125}{16}} = \sqrt[6]{\frac{500}{64}} = \frac{1}{2}\sqrt[6]{500}$.

8. $\sqrt{\frac{1}{2}} + \sqrt[3]{\frac{1}{2}} = \frac{1}{2}\sqrt{2} + \frac{1}{2}\sqrt[3]{4} = \frac{1}{2}\sqrt[6]{8} + \frac{1}{2}\sqrt[6]{16} = \frac{1}{2}\sqrt[6]{\frac{1}{2}} = \frac{1}{2}\sqrt[6]{32}$.

9. $\sqrt[3]{\frac{5}{6}} + \sqrt{\frac{5}{8}} = \sqrt[6]{\frac{25}{36}} + \sqrt[6]{\frac{125}{216}} = \sqrt[6]{\frac{25}{36} \times \frac{125}{216}} = \sqrt[6]{\frac{5^5}{3^5 \times 2^3}}$
$= \frac{1}{3}\sqrt[6]{5^5 \times 3 \times 2^4}$.

10. $\frac{3\sqrt{2} + \sqrt{72} - 3\sqrt{8}}{\sqrt{3}} = \sqrt{3} \times \sqrt{2} + \sqrt{24} - \sqrt{3} \times \sqrt{8}$
$= \sqrt{6} + 2\sqrt{6} - 2\sqrt{6} = \sqrt{6}$.

11. $\frac{9\sqrt[3]{2} - 6\sqrt[3]{6} - 3\sqrt[3]{8} + 12\sqrt[3]{32}}{3\sqrt[3]{2}} = 3 - 2\sqrt[3]{3} - \sqrt[3]{4} + 4\sqrt[3]{16}$
$= 3 - 2\sqrt[3]{3} - \sqrt[3]{4} + 8\sqrt[3]{2}$.

12. $\frac{\sqrt[3]{2} - \sqrt[3]{6} + \sqrt[3]{10} - \sqrt[3]{12}}{\sqrt[3]{2}} = 1 - \sqrt[3]{3} + \sqrt[3]{5} - \sqrt[3]{6}$.

EXERCISE 90.

1. $\frac{2}{\sqrt{3}} = \frac{2}{3}\sqrt{3} = \frac{2}{3}$ of $1.732+ = 1.155+$.

2. $\frac{1}{\sqrt{5}} = \frac{1}{5}\sqrt{5} = \frac{1}{5}$ of $2.236+ = 0.447+$.

3. $\frac{7\sqrt{2}}{\sqrt{3}} = \frac{7}{3}\sqrt{6} = \frac{7}{3}$ of $2.4494+ = 5.715+$.

4. $\frac{2\sqrt{5}}{3\sqrt{2}} = \frac{1}{3}\sqrt{10} = \frac{1}{3}$ of $3.162+ = 1.054+$.

5. $\frac{3}{\sqrt{7} + \sqrt{5}} = \frac{3(\sqrt{7} - \sqrt{5})}{7 - 5} = \frac{3}{2}(\sqrt{7} - \sqrt{5})$.

6. $\frac{7}{2\sqrt{5} - \sqrt{6}} = \frac{7(2\sqrt{5} + \sqrt{6})}{20 - 6} = \frac{1}{2}(2\sqrt{5} + \sqrt{6}) = \sqrt{5} + \frac{1}{2}\sqrt{6}$.

7. $\frac{6}{5 - 2\sqrt{6}} = \frac{6(5 + 2\sqrt{6})}{25 - 24} = 30 + 12\sqrt{6}$.

8. $\frac{4-\sqrt{2}}{1+\sqrt{2}} = \frac{(4-\sqrt{2})(1-\sqrt{2})}{1-2} = \frac{6-5\sqrt{2}}{-1} = 5\sqrt{2}-6.$

9. $\frac{\sqrt{5}+\sqrt{2}}{\sqrt{5}-\sqrt{2}} = \frac{(\sqrt{5}+\sqrt{2})^2}{5-2} = \frac{9+2\sqrt{10}}{3} = 3+\frac{2}{3}\sqrt{10}.$

10. $\frac{7+2\sqrt{10}}{7-2\sqrt{10}} = \frac{(7+2\sqrt{10})^2}{49-40} = \frac{89+28\sqrt{10}}{9}.$

11. $\frac{\sqrt{5}-\sqrt{6}}{2\sqrt{5}-\sqrt{6}} = \frac{(\sqrt{5}-\sqrt{6})(2\sqrt{5}+\sqrt{6})}{20-6} = \frac{4-\sqrt{30}}{14}.$

12. $\frac{a+b}{a-\sqrt{b}} = \frac{(a+b)(a+\sqrt{b})}{a^2-b} = \frac{a^2+ab+(a+b)\sqrt{b}}{a^2-b}.$

13. $\frac{1}{\sqrt{5}+\sqrt{3}+\sqrt{7}} = \frac{\sqrt{5}-\sqrt{3}+\sqrt{7}}{9+2\sqrt{35}} = \frac{(\sqrt{5}-\sqrt{3}+\sqrt{7})(9-2\sqrt{35})}{81-140}$

$= \frac{5\sqrt{5}+9\sqrt{3}+\sqrt{7}-2\sqrt{105}}{59}.$

14. $\frac{2}{\sqrt{5}-3\sqrt{2}+\sqrt{7}} = \frac{2(\sqrt{5}+3\sqrt{2}+\sqrt{7})}{12+2\sqrt{35}} = \frac{\sqrt{5}+3\sqrt{2}+\sqrt{7}}{6+\sqrt{35}}$

$= \frac{(\sqrt{5}+3\sqrt{2}+\sqrt{7})(6-\sqrt{35})}{1}$

$= 18\sqrt{2}-\sqrt{5}+\sqrt{7}-3\sqrt{70}.$

EXERCISE 91.

1. $(\sqrt[3]{8})^4 = (\sqrt[3]{2^3})^4 = (2^{\frac{1}{3}})^4 = 2^{\frac{4}{3}} = 2\sqrt[3]{2}.$

2. $(\sqrt[3]{64})^3 = (\sqrt[3]{2^6})^3 = (2^{\frac{2}{3}})^3 = 2^{\frac{6}{4}} = 4\sqrt[4]{2}.$

3. $(\sqrt[3]{4})^2 = (\sqrt[3]{2^2})^2 = (2^{\frac{2}{3}})^2 = 2^{\frac{4}{3}} = 2\sqrt[3]{2}.$

4. $(a\sqrt[3]{a})^3 = (a^{\frac{4}{3}})^3 = a^4.$

5. $(x\sqrt[3]{x})^2 = (x^{\frac{4}{3}})^2 = x^{\frac{8}{3}} = x^2\sqrt[3]{x^2}.$

6. $(3\sqrt[6]{3})^2 = (3^{\frac{7}{6}})^2 = 3^{\frac{7}{3}} = 9\sqrt[3]{3}$.

7. $(\sqrt[3]{256})^{\frac{1}{4}} = (\sqrt[3]{2^8})^{\frac{1}{4}} = 2^{\frac{2}{3}} = \sqrt[3]{4}$.

8. $\left(\frac{a}{3}\sqrt[4]{a}\right)^{\frac{1}{3}} - \left(\frac{a^{\frac{3}{4}}}{3^{\frac{3}{4}}}\right)^{\frac{1}{3}} = \frac{a^{\frac{1}{3}}}{3^{\frac{1}{4}}} = \sqrt[12]{\frac{a}{3}}$.

9. $(2\sqrt[6]{4a^4b})^{\frac{1}{3}} = (2\sqrt[6]{2^2a^4b})^{\frac{1}{3}} = \sqrt[6]{2^3a^4b} = (\sqrt[6]{2^3a^4b})^{\frac{1}{3}} = (2^{\frac{1}{2}}a^{\frac{2}{3}}b^{\frac{1}{6}})^{\frac{1}{3}}$
$= 2^{\frac{1}{6}}a^{\frac{2}{9}}b^{\frac{1}{18}} = 2^{\frac{3}{18}}a^{\frac{4}{18}}b^{\frac{1}{18}} = \sqrt[18]{256a^4b}$.

Exercise 92.

1.

Let $\sqrt{x} + \sqrt{y} = \sqrt{14 + 6\sqrt{5}}$.
Then $\sqrt{x} - \sqrt{y} = \sqrt{14 - 6\sqrt{5}}$.
By multiplying,
$x - y = \sqrt{196 - 180}$.
$\therefore x - y = 4$.
But $x + y = 14$.
$\therefore x = 9$,
and $y = 5$.
$\therefore \sqrt{x} + \sqrt{y} = 3 + \sqrt{5}$.
$\therefore \sqrt{14 + 6\sqrt{5}} = 3 + \sqrt{5}$.

2.

Let $\sqrt{x} + \sqrt{y} = \sqrt{17 + 4\sqrt{15}}$.
Then $\sqrt{x} - \sqrt{y} = \sqrt{17 - 4\sqrt{15}}$.
By multiplying,
$x - y = \sqrt{289 - 240}$.
$\therefore x - y = 7$.
But $x + y = 17$.
$\therefore x = 12$,
and $y = 5$.
$\therefore \sqrt{x} + \sqrt{y} = \sqrt{12} + \sqrt{5}$
$= 2\sqrt{3} + \sqrt{5}$.

3.

Let $\sqrt{x} + \sqrt{y} = \sqrt{10 + 2\sqrt{21}}$.
Then $\sqrt{x} - \sqrt{y} = \sqrt{10 - 2\sqrt{21}}$.
By multiplying,
$x - y = \sqrt{100 - 84}$.
$\therefore x - y = 4$.
But $x + y = 10$.
$\therefore x = 7$,
and $y = 3$.
$\therefore \sqrt{x} + \sqrt{y} = \sqrt{7} + \sqrt{3}$.
$\therefore \sqrt{10 + 2\sqrt{21}} = \sqrt{7} + \sqrt{3}$.

4.

Let $\sqrt{x} + \sqrt{y} = \sqrt{16 + 2\sqrt{55}}$.
Then $\sqrt{x} - \sqrt{y} = \sqrt{16 - 2\sqrt{55}}$.
By multiplying,
$x - y = \sqrt{256 - 220}$.
$\therefore x - y = 6$.
But $x + y = 16$.
$\therefore x = 11$,
and $y = 5$.
$\therefore \sqrt{x} + \sqrt{y} = \sqrt{11} + \sqrt{5}$.

5.

Let $\sqrt{x}-\sqrt{y}=\sqrt{9-2\sqrt{14}}$.

Then $\sqrt{x}+\sqrt{y}=\sqrt{9+2\sqrt{14}}$.

By multiplying,

$x-y=\sqrt{25}$.

$\therefore x-y=5$.

But $x+y=9$.

$\therefore x=7$,

and $y=2$.

$\therefore \sqrt{x}-\sqrt{y}=\sqrt{7}-\sqrt{2}$.

6.

Let $\sqrt{x}-\sqrt{y}=\sqrt{20-8\sqrt{6}}$.

Then $\sqrt{x}+\sqrt{y}=\sqrt{20+8\sqrt{6}}$.

By multiplying,

$x-y=\sqrt{400-384}$.

$\therefore x-y=4$.

But $x+y=20$.

$\therefore x=12$,

and $y=8$.

$\therefore \sqrt{x}-\sqrt{y}=\sqrt{12}-\sqrt{8}$

$=2(\sqrt{3}-\sqrt{2})$.

7.

Let $\sqrt{x}-\sqrt{y}=\sqrt{9-6\sqrt{2}}$.

Then $\sqrt{x}+\sqrt{y}=\sqrt{9+6\sqrt{2}}$.

By multiplying,

$x-y=\sqrt{81-72}$.

$\therefore x-y=3$.

But $x+y=9$.

$\therefore x=6$,

and $y=3$.

$\therefore \sqrt{x}-\sqrt{y}=\sqrt{6}-\sqrt{3}$.

8.

Let $\sqrt{x}-\sqrt{y}=\sqrt{94-42\sqrt{5}}$.

Then $\sqrt{x}+\sqrt{y}=\sqrt{94+42\sqrt{5}}$.

By multiplying,

$x-y=\sqrt{8836-8820}$.

$\therefore x-y=4$.

But $x+y=94$.

$\therefore x=49$,

and $y=45$.

$\therefore \sqrt{x}-\sqrt{y}=7-3\sqrt{5}$.

9.

Let $\sqrt{x}-\sqrt{y}=\sqrt{13-2\sqrt{30}}$.

Then $\sqrt{x}+\sqrt{y}=\sqrt{13+2\sqrt{30}}$.

By multiplying,

$x-y=\sqrt{169-120}$.

$\therefore x-y=7$.

But $x+y=13$.

$\therefore x=10$,

and $y=3$.

$\therefore \sqrt{x}-\sqrt{y}=\sqrt{10}-\sqrt{3}$.

10.

Let $\sqrt{x}-\sqrt{y}=\sqrt{11-6\sqrt{2}}$.

Then $\sqrt{x}+\sqrt{y}=\sqrt{11+6\sqrt{2}}$.

By multiplying,

$x-y=\sqrt{121-72}$.

$\therefore x-y=7$.

But $x+y=11$.

$\therefore x=9$,

and $y=2$.

$\therefore \sqrt{x}-\sqrt{y}=3-\sqrt{2}$.

Exercise 85.

1. $\sqrt[4]{3} = 3^{\frac{1}{4}} = 3^{\frac{3}{12}} = \sqrt[12]{3^3} = \sqrt[12]{27}.$
   $\sqrt[6]{2} = 2^{\frac{1}{6}} = 2^{\frac{2}{12}} = \sqrt[12]{2^2} = \sqrt[12]{4}.$

2. $\sqrt[3]{7} = 7^{\frac{1}{3}} = 7^{\frac{2}{6}} = \sqrt[6]{7^2} = \sqrt[6]{49}.$
   $\sqrt{6} = 6^{\frac{1}{2}} = 6^{\frac{3}{6}} = \sqrt[6]{6^3} = \sqrt[6]{216}.$

3. $\sqrt{3} = 3^{\frac{1}{2}} = 3^{\frac{3}{6}} = \sqrt[6]{3^3} = \sqrt[6]{27}.$
   $\sqrt[3]{4} = 4^{\frac{1}{3}} = 4^{\frac{2}{6}} = \sqrt[6]{4^2} = \sqrt[6]{16}.$

4. $\sqrt[4]{a} = a^{\frac{1}{4}} = a^{\frac{3}{12}} = \sqrt[12]{a^3}.$
   $\sqrt[3]{b^2} = b^{\frac{2}{3}} = b^{\frac{8}{12}} = \sqrt[12]{b^8}.$

5. $\sqrt{5} = 5^{\frac{1}{2}} = 5^{\frac{3}{6}} = \sqrt[6]{125}.$
   $\sqrt[6]{25} = \sqrt[6]{25}.$

6. $3^{\frac{1}{2}} = 3^{\frac{6}{12}} = \sqrt[12]{3^6} = \sqrt[12]{729}.$
   $3^{\frac{2}{3}} = 3^{\frac{8}{12}} = \sqrt[12]{3^8} = \sqrt[12]{6561}.$
   $3^{\frac{3}{4}} = 3^{\frac{9}{12}} = \sqrt[12]{3^9} = \sqrt[12]{19683}.$

7. $\sqrt[3]{2} = 2^{\frac{1}{3}} = 2^{\frac{4}{12}} = \sqrt[12]{2^4} = \sqrt[12]{16}.$
   $\sqrt[4]{3} = 3^{\frac{1}{4}} = 3^{\frac{3}{12}} = \sqrt[12]{3^3} = \sqrt[12]{27}.$
   $\sqrt[6]{5} = 5^{\frac{1}{6}} = 5^{\frac{2}{12}} = \sqrt[12]{5^2} = \sqrt[12]{25}.$

8. $\sqrt[6]{a^2} = a^{\frac{2}{6}} = a^{\frac{1}{3}} = a^{\frac{7}{21}} = \sqrt[21]{a^7}.$
   $\sqrt[3]{b} = b^{\frac{1}{3}} = b^{\frac{7}{21}} = \sqrt[21]{b^7}.$
   $\sqrt[7]{c} = c^{\frac{1}{7}} = c^{\frac{3}{21}} = \sqrt[21]{c^3}.$

9. $\sqrt[5]{a^4} = a^{\frac{4}{5}} = a^{\frac{16}{20}} = \sqrt[20]{a^{16}}.$
   $\sqrt[10]{c^3} = c^{\frac{3}{10}} = c^{\frac{6}{20}} = \sqrt[20]{c^6}.$
   $\sqrt[4]{x^3} = x^{\frac{3}{4}} = x^{\frac{15}{20}} = \sqrt[20]{x^{15}}.$

10. $\sqrt[4]{x^2y} = (x^2y)^{\frac{1}{4}} = (x^2y)^{\frac{3}{12}} = \sqrt[12]{x^6y^3}.$
    $\sqrt[3]{abc} = (abc)^{\frac{1}{3}} = (abc)^{\frac{4}{12}} = \sqrt[12]{a^4b^4c^4}.$
    $\sqrt{2z} = (2z)^{\frac{1}{2}} = (2z)^{\frac{6}{12}} = \sqrt[12]{64z^6}.$

11. $\sqrt[5]{x-y} = (x-y)^{\frac{1}{5}} = (x-y)^{\frac{3}{15}} = \sqrt[15]{(x-y)^3}.$

$\sqrt[3]{x+y} = (x+y)^{\frac{1}{3}} = (x+y)^{\frac{5}{15}} = \sqrt[15]{(x+y)^5}.$

12. $\sqrt[3]{a+b} = (a+b)^{\frac{1}{3}} = (a+b)^{\frac{4}{12}} = \sqrt[12]{(a+b)^4}.$

$\sqrt[4]{a-b} = (a-b)^{\frac{1}{4}} = (a-b)^{\frac{3}{12}} = \sqrt[12]{(a-b)^3}.$

13. $2\sqrt[3]{3} = \sqrt[3]{24} = 24^{\frac{1}{3}} = 24^{\frac{2}{6}} = \sqrt[6]{24^2} = \sqrt[6]{576}.$

$3\sqrt{2} = \sqrt{18} = 18^{\frac{1}{2}} = 18^{\frac{3}{6}} = \sqrt[6]{18^3} = \sqrt[6]{5832}.$

$\frac{5}{2}\sqrt[4]{4} = \frac{5}{2}\sqrt{2} = \sqrt{\frac{25}{4}} = (\frac{25}{4})^{\frac{1}{2}} = (\frac{25}{4})^{\frac{3}{6}} = \sqrt[6]{(\frac{25}{4})^3} = \sqrt[6]{1953\frac{1}{8}}.$

Therefore the order of descending magnitude is $3\sqrt{2}$, $\frac{5}{2}\sqrt[4]{4}$, $2\sqrt[3]{3}$.

14. $\sqrt{\frac{3}{5}} = (\frac{3}{5})^{\frac{1}{2}} = (\frac{3}{5})^{\frac{3}{6}} = \sqrt[6]{(\frac{3}{5})^3} = \sqrt[6]{\frac{27}{125}}.$

$\sqrt[3]{\frac{14}{15}} = (\frac{14}{15})^{\frac{1}{3}} = (\frac{14}{15})^{\frac{2}{6}} = \sqrt[6]{(\frac{14}{15})^2} = \sqrt[6]{\frac{196}{225}}.$

As $\frac{196}{225}$ is greater than $\frac{27}{125}$, the order of magnitude is $\sqrt[3]{\frac{14}{15}}$, $\sqrt{\frac{3}{5}}$.

15. $2\sqrt[3]{22} = \sqrt[3]{176} = 176^{\frac{1}{3}} = 176^{\frac{2}{6}} = \sqrt[6]{176^2} = \sqrt[6]{30976}.$

$3\sqrt[3]{7} = \sqrt[3]{189} = 189^{\frac{1}{3}} = 189^{\frac{2}{6}} = \sqrt[6]{189^2} = \sqrt[6]{35721}.$

$4\sqrt{2} = \sqrt{32} = 32^{\frac{1}{2}} = 32^{\frac{3}{6}} = \sqrt[6]{32^3} = \sqrt[6]{32768}.$

Therefore the order of magnitude is $3\sqrt[3]{7}$, $4\sqrt{2}$, $2\sqrt[3]{22}$.

16. $3\sqrt{19} = \sqrt{171} = 171^{\frac{1}{2}} = 171^{\frac{3}{6}} = \sqrt[6]{171^3} = \sqrt[6]{5000211}.$

$5\sqrt[3]{2} = \sqrt[3]{250} = 250^{\frac{1}{3}} = 250^{\frac{2}{6}} = \sqrt[6]{250^2} = \sqrt[6]{62500}.$

$3\sqrt[3]{3} = \sqrt[3]{81} = 81^{\frac{1}{3}} = 81^{\frac{2}{6}} = \sqrt[6]{81^2} = \sqrt[6]{6561}.$

Therefore the order of magnitude is $3\sqrt{19}$, $5\sqrt[3]{2}$, $3\sqrt[3]{3}$.

Exercise 86.

1. $8\sqrt{11} + 7\sqrt{11} - 10\sqrt{11} = (8 + 7 - 10)\sqrt{11} = 5\sqrt{11}.$

2. $3\sqrt{5} - 5\sqrt{5} + 7\sqrt{5} = (3 - 5 + 7)\sqrt{5} = 5\sqrt{5}.$

3. $\sqrt{27} + 2\sqrt{48} + 3\sqrt{108} = 3\sqrt{3} + 8\sqrt{3} + 18\sqrt{3}$

$= (3 + 8 + 18)\sqrt{3} = 29\sqrt{3}.$

4. $\sqrt[3]{128} + \sqrt[3]{686} + \sqrt[3]{16} = 4\sqrt[3]{2} + 7\sqrt[3]{2} + 2\sqrt[3]{2}$
$= (4 + 7 + 2)\sqrt[3]{2} = 13\sqrt[3]{2}.$

5. $12\sqrt{72} - 3\sqrt{128} = 72\sqrt{2} - 24\sqrt{2} = 48\sqrt{2}.$

6. $2\sqrt{3} + 3\sqrt{1\tfrac{1}{3}} - \sqrt{5\tfrac{1}{3}} = 2\sqrt{3} + 3\sqrt{\tfrac{4}{3} \times 3} - \sqrt{\tfrac{16}{3} \times 3}$
$= 2\sqrt{3} + 2\sqrt{3} - \tfrac{4}{3}\sqrt{3} = 2\tfrac{2}{3}\sqrt{3}.$

7. $\sqrt{1000} + \sqrt{50} + \sqrt{288} = 10\sqrt{10} + 5\sqrt{2} + 12\sqrt{2} = 10\sqrt{10} + 17\sqrt{2}.$

8. $\sqrt[3]{54} + 3\sqrt[3]{16} + \sqrt[3]{432} = 3\sqrt[3]{2} + 6\sqrt[3]{2} + 6\sqrt[3]{2} = 15\sqrt[3]{2}.$

9. $7\sqrt[3]{81} - 3\sqrt[3]{1029} = 21\sqrt[3]{3} - 21\sqrt[3]{3} = 0.$

10. $\sqrt{\tfrac{5}{3}} + \sqrt{60} - \sqrt{15} - \sqrt{\tfrac{3}{5}} = \tfrac{1}{3}\sqrt{15} + 2\sqrt{15} - 1\sqrt{15} - \tfrac{1}{5}\sqrt{15}$
$= 1\tfrac{2}{15}\sqrt{15}.$

11. $\sqrt{\dfrac{a^4c}{b^3}} - \sqrt{\dfrac{a^2c^3}{bd^2}} - \sqrt{\dfrac{a^3cd^2}{bm^2}} = \dfrac{a^2}{b^2}\sqrt{bc} - \dfrac{ac}{bd}\sqrt{bc} - \dfrac{ad}{bm}\sqrt{bc}$
$= \left(\dfrac{a^2}{b^2} - \dfrac{ac}{bd} - \dfrac{ad}{bm}\right)\sqrt{bc}$
$= \dfrac{a}{b}\left(\dfrac{a}{b} - \dfrac{c}{d} - \dfrac{d}{m}\right)\sqrt{bc}.$

12. $\sqrt{\tfrac{2}{5}} + \sqrt{\tfrac{1}{10}} - \sqrt{\tfrac{1}{40}} = \tfrac{1}{5}\sqrt{10} + \tfrac{1}{10}\sqrt{10} - \tfrac{1}{20}\sqrt{10} = \tfrac{1}{4}\sqrt{10}.$

13. $\sqrt{4a^3b} + \sqrt{25ab^3} - (a-5b)\sqrt{ab} = 2a\sqrt{ab} + 5b\sqrt{ab} - (a-5b)\sqrt{ab}$
$= (a + 10b)\sqrt{ab}.$

14. $c\sqrt[5]{a^6b^7c^3} - a\sqrt[5]{ab^7c^8} + b\sqrt[5]{a^6b^2c^8}$
$= abc\sqrt[5]{ab^2c^3} - abc\sqrt[5]{ab^2c^3} + abc\sqrt[5]{ab^2c^3} = abc\sqrt[5]{ab^2c^3}.$

15. $2\sqrt[3]{40} + 3\sqrt[3]{108} + \sqrt[3]{500} - \sqrt[3]{320} - 2\sqrt[3]{1372}$
$= 4\sqrt[3]{5} + 9\sqrt[3]{4} + 5\sqrt[3]{4} - 4\sqrt[3]{5} - 14\sqrt[3]{4} = 0.$

16. $\sqrt{363} - 2\sqrt{243} + \sqrt{108} - 2\sqrt{147}$
$= 11\sqrt{3} - 18\sqrt{3} + 6\sqrt{3} - 14\sqrt{3} = -15\sqrt{3}.$

17. $\sqrt[3]{189} - 2\sqrt[3]{448} + \sqrt[3]{875} + \sqrt[3]{1512}$
$= 3\sqrt[3]{7} - 8\sqrt[3]{7} + 5\sqrt[3]{7} + 6\sqrt[3]{7} = 6\sqrt[3]{7}.$

18. $\sqrt[4]{162} - \sqrt[4]{512} + 2\sqrt[4]{32} - \sqrt[4]{1250} = 3\sqrt[4]{2} - 4\sqrt[4]{2} + 4\sqrt[4]{2} - 5\sqrt[4]{2}$
$= -2\sqrt[4]{2}.$

19. $\sqrt[3]{-81} - 3\sqrt[3]{-24} + 2\sqrt[5]{192} = -3\sqrt[3]{3} + 6\sqrt[3]{3} + 8\sqrt[3]{3} = 11\sqrt[3]{3}.$

20. $\sqrt{20} + \sqrt{45} - \sqrt{\tfrac{4}{5}} = 2\sqrt{5} + 3\sqrt{5} - \tfrac{2}{5}\sqrt{5} = 4\tfrac{3}{5}\sqrt{5}.$

21. $2\sqrt[3]{a^3b^2} + \sqrt[3]{8b^5} - \frac{1}{2}\sqrt[3]{\frac{a^6}{b}} = 2a\sqrt[3]{b^2} + 2b\sqrt[3]{b^2} - \frac{a^2}{2b}\sqrt[3]{b^2}$
$= \left(2a + 2b - \frac{a^2}{2b}\right)\sqrt[3]{b^2}.$

22. $\sqrt{50} + \tfrac{5}{2}\sqrt{288} - \frac{1}{\sqrt{2}} - \frac{3}{\sqrt{450}} = 5\sqrt{2} + 30\sqrt{2} - \tfrac{1}{2}\sqrt{2} - \tfrac{1}{10}\sqrt{2}$
$= 34\tfrac{2}{5}\sqrt{2}.$

23. $\sqrt{1701} + \tfrac{1}{4}\sqrt{84} - \tfrac{1}{5}\sqrt{525} = 9\sqrt{21} + \tfrac{1}{2}\sqrt{21} - 1\sqrt{21} = 8\tfrac{1}{2}\sqrt{21}.$

Exercise 87.

1. $3\sqrt{2} \times 4\sqrt{6} = 12\sqrt{12} = 24\sqrt{3}.$

2. $2\sqrt{5} \times 3\sqrt{15} = 6\sqrt{75} = 30\sqrt{3}.$

3. $2\sqrt{10} \times 5\sqrt{14} = 10\sqrt{140} = 20\sqrt{35}.$

4. $3\sqrt{27} \times 7\sqrt{48} = 9\sqrt{3} \times 28\sqrt{3} = 9 \times 28 \times 3 = 756.$

5. $2\sqrt[3]{4} \times 5\sqrt[3]{32} = 2\sqrt[3]{4} \times 10\sqrt[3]{4} = 20\sqrt[3]{16} = 40\sqrt[3]{2}.$

6. $\tfrac{2}{7}\sqrt{10} \times \tfrac{7}{10}\sqrt{15} = \tfrac{1}{5}\sqrt{150} = \sqrt{6}.$

7. $5\sqrt{\tfrac{2}{7}} \times \tfrac{3}{7}\sqrt{162} = 5\sqrt{\tfrac{2}{7}} \times \tfrac{27}{7}\sqrt{2} = \tfrac{135}{7}\sqrt{\tfrac{4}{7}} = \tfrac{135}{49}\sqrt{28}.$

8. $\tfrac{3}{8}\sqrt{21} \times \tfrac{9}{10}\sqrt{\tfrac{7}{20}} = \tfrac{27}{80}\sqrt{\tfrac{147}{20}} = \tfrac{189}{800}\sqrt{\tfrac{3}{20}} = \tfrac{189}{8000}\sqrt{15}.$

9. $\sqrt[3]{108} \times 5\sqrt{32} = 3\sqrt[3]{4} \times 20\sqrt{2} = 3\sqrt[6]{16} \times 20\sqrt[6]{8} = 60\sqrt[6]{128}$
$= 60\sqrt[6]{2^7} = 120\sqrt[6]{2}.$

10. $5\sqrt[3]{54} \times 7\sqrt{48} = 15\sqrt[3]{2} \times 28\sqrt{3} = 15\sqrt[6]{4} \times 28\sqrt[6]{27} = 420\sqrt[6]{108}.$

Exercise 88.

1. $(2\sqrt{x}-7)\times 3\sqrt{x}$.

$$\begin{array}{r} 2\sqrt{x}-7 \\ 3\sqrt{x} \\ \hline 6x-21\sqrt{x} \end{array}$$

2. $(\sqrt{a}-\sqrt{b})^2$.

$$\begin{array}{r} a^{\frac{1}{2}}-b^{\frac{1}{2}} \\ a^{\frac{1}{2}}-b^{\frac{1}{2}} \\ \hline a- a^{\frac{1}{2}}b^{\frac{1}{2}} \\ \quad - a^{\frac{1}{2}}b^{\frac{1}{2}}+b \\ \hline a-2a^{\frac{1}{2}}b^{\frac{1}{2}}+b \end{array}$$

3. $(3\sqrt{5}-7\sqrt{2})^2$.

$$\begin{array}{r} 3\sqrt{5}-7\sqrt{2} \\ 3\sqrt{5}-7\sqrt{2} \\ \hline 45-21\sqrt{10} \\ \quad -21\sqrt{10}+98 \\ \hline 143-42\sqrt{10} \end{array}$$

4. $(\sqrt{7}+3\sqrt{3})(\sqrt{7}-2\sqrt{3})$.

$$\begin{array}{r} \sqrt{7}+3\sqrt{3} \\ \sqrt{7}-2\sqrt{3} \\ \hline 7+3\sqrt{21} \\ \quad -2\sqrt{21}-18 \\ \hline -11+\sqrt{21} \end{array}$$

5. $(3\sqrt{5}-\sqrt{2})(\sqrt{5}-3\sqrt{2})$.

$$\begin{array}{r} 3\sqrt{5}-\sqrt{2} \\ \sqrt{5}-3\sqrt{2} \\ \hline 15- 1\sqrt{10} \\ \quad -9\sqrt{10}+6 \\ \hline 21-10\sqrt{10} \end{array}$$

6. $(\sqrt{2}+\sqrt{3}-\sqrt{5})^2$.

$$\begin{array}{r} \sqrt{2}+\sqrt{3}-\sqrt{5} \\ \sqrt{2}+\sqrt{3}-\sqrt{5} \\ \hline 2+\sqrt{6}-\sqrt{10} \\ \quad +\sqrt{6} \qquad +3-\sqrt{15} \\ \qquad -\sqrt{10} \qquad -\sqrt{15}+5 \\ \hline 10+2\sqrt{6}-2\sqrt{10}-2\sqrt{15} \end{array}$$

7. $(\sqrt{5}+3\sqrt{2}+\sqrt{7})^2$.

$$\begin{array}{r} \sqrt{5}+3\sqrt{2}+\sqrt{7} \\ \sqrt{5}+3\sqrt{2}+\sqrt{7} \\ \hline 5+3\sqrt{10}+\sqrt{35} \\ \quad +3\sqrt{10} \qquad +18+3\sqrt{14} \\ \qquad +\sqrt{35} \qquad +3\sqrt{14}+7 \\ \hline 30+6\sqrt{10}+2\sqrt{35} \qquad +6\sqrt{14} \end{array}$$

8. $(2\sqrt{5}-\sqrt{2}-\sqrt{7})^2$.

$$\begin{array}{r} 2\sqrt{5}-\sqrt{2}-\sqrt{7} \\ 2\sqrt{5}-\sqrt{2}-\sqrt{7} \\ \hline 20-2\sqrt{10}-2\sqrt{35} \\ -2\sqrt{10}\qquad +2+\sqrt{14} \\ -2\sqrt{35}\qquad +\sqrt{14}+7 \\ \hline 29-4\sqrt{10}-4\sqrt{35}+2\sqrt{14} \end{array}$$

9. $(2\sqrt{x}+\sqrt{3-2x})^2$.

$$\begin{array}{r} 2\sqrt{x}+\sqrt{3-2x} \\ 2\sqrt{x}+\sqrt{3-2x} \\ \hline 4x+2\sqrt{3x-2x^2} \\ +2\sqrt{3x-2x^2}+3-2x \\ \hline 3+2x+4\sqrt{3x-2x^2} \end{array}$$

10. $(2\sqrt{a^2+b^2}-3\sqrt{a^2-b^2})^2$.

$$\begin{array}{r} 2\sqrt{a^2+b^2}-3\sqrt{a^2-b^2} \\ 2\sqrt{a^2+b^2}-3\sqrt{a^2-b^2} \\ \hline 4(a^2+b^2)-6\sqrt{a^4-b^4} \\ -6\sqrt{a^4-b^4}+9(a^2-b^2) \\ \hline 4a^2+4b^2-12\sqrt{a^4-b^4}+9a^2-9b^2 \\ =13a^2-5b^2-12\sqrt{a^4-b^4}. \end{array}$$

Exercise 89.

1. $\sqrt{162}+\sqrt{2}=\sqrt{81}=9$.
2. $\sqrt[3]{81}+\sqrt[3]{3}=\sqrt[3]{27}=3$.
3. $\sqrt{2a^{11}}+\sqrt{a^3}=\sqrt{2a^8}=a^4\sqrt{2}$.
4. $\sqrt{\frac{1}{3}}+\sqrt{\frac{3}{7}}=\sqrt{\frac{1}{3}}\times\sqrt{\frac{7}{3}}=\sqrt{\frac{7}{9}}=\frac{1}{3}\sqrt{7}$.
5. $\sqrt{\frac{5}{12}}+\sqrt{\frac{3}{5}}=\sqrt{\frac{5}{12}}\times\sqrt{\frac{5}{3}}=\sqrt{\frac{25}{36}}=\frac{5}{6}$.

6. $2\sqrt{\frac{1}{2}} + \frac{1}{2}\sqrt{\frac{1}{2}} = 2 \times \frac{1}{2}\sqrt{\frac{1}{2} \times \frac{1}{2}} = \frac{1}{2}\sqrt{\frac{1}{4}} = \frac{1}{4}\sqrt{3}.$

7. $\sqrt{5} + \sqrt[3]{4} = \sqrt[6]{125} + \sqrt[6]{16} = \sqrt[6]{\frac{125}{16}} = \sqrt[6]{\frac{500}{64}} = \frac{1}{2}\sqrt[6]{500}.$

8. $\sqrt{\frac{1}{8}} + \sqrt[3]{\frac{1}{2}} = \frac{1}{4}\sqrt{2} + \frac{1}{2}\sqrt[3]{4} = \frac{1}{4}\sqrt[6]{8} + \frac{1}{2}\sqrt[6]{16} = \frac{3}{4}\sqrt[6]{\frac{1}{2}} = \frac{1}{8}\sqrt[6]{32}.$

9. $\sqrt[3]{\frac{5}{8}} + \sqrt{\frac{3}{8}} = \sqrt[6]{\frac{25}{36}} + \sqrt[6]{\frac{27}{125}} = \sqrt[6]{\frac{125}{216} \times \frac{135}{27}} = \sqrt[6]{\frac{5^5}{3^5 \times 2^2}}$
$= \frac{1}{6}\sqrt[6]{5^5 \times 3 \times 2^4}.$

10. $\frac{3\sqrt{2} + \sqrt{72} - 3\sqrt{8}}{\sqrt{3}} = \sqrt{3} \times \sqrt{2} + \sqrt{24} - \sqrt{3} \times \sqrt{8}$
$= \sqrt{6} + 2\sqrt{6} - 2\sqrt{6} = \sqrt{6}.$

11. $\frac{9\sqrt[3]{2} - 6\sqrt[3]{6} - 3\sqrt[3]{8} + 12\sqrt[3]{32}}{3\sqrt[3]{2}} = 3 - 2\sqrt[3]{3} - \sqrt[3]{4} + 4\sqrt[3]{16}$
$= 3 - 2\sqrt[3]{3} - \sqrt[3]{4} + 8\sqrt[3]{2}.$

12. $\frac{\sqrt[3]{2} - \sqrt[3]{6} + \sqrt[3]{10} - \sqrt[3]{12}}{\sqrt[3]{2}} = 1 - \sqrt[3]{3} + \sqrt[3]{5} - \sqrt[3]{6}.$

Exercise 90.

1. $\frac{2}{\sqrt{3}} = \frac{2}{3}\sqrt{3} = \frac{2}{3}$ of $1.732+ = 1.155+.$

2. $\frac{1}{\sqrt{5}} = \frac{1}{5}\sqrt{5} = \frac{1}{5}$ of $2.236+ = 0.447+.$

3. $\frac{7\sqrt{2}}{\sqrt{3}} = \frac{7}{3}\sqrt{6} = \frac{7}{3}$ of $2.4494+ = 5.715+.$

4. $\frac{2\sqrt{5}}{3\sqrt{2}} = \frac{1}{3}\sqrt{10} = \frac{1}{3}$ of $3.162+ = 1.054+.$

5. $\frac{3}{\sqrt{7} + \sqrt{5}} = \frac{3(\sqrt{7} - \sqrt{5})}{7 - 5} = \frac{3}{2}(\sqrt{7} - \sqrt{5}).$

6. $\frac{7}{2\sqrt{5} - \sqrt{6}} = \frac{7(2\sqrt{5} + \sqrt{6})}{20 - 6} = \frac{1}{2}(2\sqrt{5} + \sqrt{6}) = \sqrt{5} + \frac{1}{2}\sqrt{6}.$

7. $\frac{6}{5 - 2\sqrt{6}} = \frac{6(5 + 2\sqrt{6})}{25 - 24} = 30 + 12\sqrt{6}.$

8. $\dfrac{4-\sqrt{2}}{1+\sqrt{2}} = \dfrac{(4-\sqrt{2})(1-\sqrt{2})}{1-2} = \dfrac{6-5\sqrt{2}}{-1} = 5\sqrt{2}-6.$

9. $\dfrac{\sqrt{5}+\sqrt{2}}{\sqrt{5}-\sqrt{2}} = \dfrac{(\sqrt{5}+\sqrt{2})^2}{5-2} = \dfrac{9+2\sqrt{10}}{3} = 3+\tfrac{2}{3}\sqrt{10}.$

10. $\dfrac{7+2\sqrt{10}}{7-2\sqrt{10}} = \dfrac{(7+2\sqrt{10})^2}{49-40} = \dfrac{89+28\sqrt{10}}{9}.$

11. $\dfrac{\sqrt{5}-\sqrt{6}}{2\sqrt{5}-\sqrt{6}} = \dfrac{(\sqrt{5}-\sqrt{6})(2\sqrt{5}+\sqrt{6})}{20-6} = \dfrac{4-\sqrt{30}}{14}.$

12. $\dfrac{a+b}{a-\sqrt{b}} = \dfrac{(a+b)(a+\sqrt{b})}{a^2-b} = \dfrac{a^2+ab+(a+b)\sqrt{b}}{a^2-b}.$

13. $\dfrac{1}{\sqrt{5}+\sqrt{3}+\sqrt{7}} = \dfrac{\sqrt{5}-\sqrt{3}+\sqrt{7}}{9+2\sqrt{35}} = \dfrac{(\sqrt{5}-\sqrt{3}+\sqrt{7})(9-2\sqrt{35})}{81-140}$

$$= \frac{5\sqrt{5}+9\sqrt{3}+\sqrt{7}-2\sqrt{105}}{59}.$$

14. $\dfrac{2}{\sqrt{5}-3\sqrt{2}+\sqrt{7}} = \dfrac{2(\sqrt{5}+3\sqrt{2}+\sqrt{7})}{12+2\sqrt{35}} = \dfrac{\sqrt{5}+3\sqrt{2}+\sqrt{7}}{6+\sqrt{35}}$

$$= \frac{(\sqrt{5}+3\sqrt{2}+\sqrt{7})(6-\sqrt{35})}{1}$$

$$= 18\sqrt{2}-\sqrt{5}+\sqrt{7}-3\sqrt{70}.$$

Exercise 91.

1. $(\sqrt[3]{8})^4 = (\sqrt[3]{2^3})^4 = (2^{\frac{1}{3}})^4 = 2^{\frac{4}{3}} = 2\sqrt[3]{2}.$

2. $(\sqrt[3]{64})^3 = (\sqrt[3]{2^6})^3 = (2^{\frac{2}{3}})^3 = 2^{\frac{6}{3}} = 4\sqrt[4]{2}.$

3. $(\sqrt[3]{4})^2 = (\sqrt[3]{2^2})^2 = (2^{\frac{2}{3}})^2 = 2^{\frac{4}{3}} = 2\sqrt[3]{2}.$

4. $(a\sqrt[3]{a})^3 = (a^{\frac{4}{3}})^3 = a^4.$

5. $(x\sqrt[3]{x})^2 = (x^{\frac{4}{3}})^2 = x^{\frac{8}{3}} = x^2\sqrt[3]{x^2}.$

6. $(3\sqrt[6]{3})^2 = (3^{\frac{7}{6}})^2 = 3^{\frac{7}{3}} = 9\sqrt[3]{3}$.

7. $(\sqrt[3]{256})^{\frac{1}{4}} = (\sqrt[3]{2^8})^{\frac{1}{4}} = 2^{\frac{2}{3}} = \sqrt[3]{4}$.

8. $\left(\frac{a}{3}\sqrt{\frac{a}{3}}\right)^{\frac{1}{2}} = \left(\frac{a^{\frac{3}{2}}}{3^{\frac{3}{2}}}\right)^{\frac{1}{2}} = \frac{a^{\frac{1}{2}}}{3^{\frac{1}{2}}} = \sqrt{\frac{a}{3}}$.

9. $(2\sqrt[6]{4a^4b})^{\frac{1}{3}} = (2\sqrt[6]{2^2a^4b})^{\frac{1}{3}} = \sqrt[6]{2^6a^4b} = (\sqrt[6]{2^6a^4b})^{\frac{1}{3}} = (2^{\frac{4}{3}}a^{\frac{2}{3}}b^{\frac{1}{6}})^{\frac{1}{3}}$
$= 2^{\frac{4}{9}}a^{\frac{2}{9}}b^{\frac{1}{18}} = 2^{\frac{8}{18}}a^{\frac{4}{18}}b^{\frac{1}{18}} = \sqrt[18]{256a^4b}$.

Exercise 92.

1.

Let $\sqrt{x} + \sqrt{y} = \sqrt{14 + 6\sqrt{5}}$.
Then $\sqrt{x} - \sqrt{y} = \sqrt{14 - 6\sqrt{5}}$.
By multiplying,
$x - y = \sqrt{196 - 180}$.
$\therefore x - y = 4$.
But $x + y = 14$.
$\therefore x = 9$,
and $y = 5$.
$\therefore \sqrt{x} + \sqrt{y} = 3 + \sqrt{5}$.
$\therefore \sqrt{14 + 6\sqrt{5}} = 3 + \sqrt{5}$.

2.

Let $\sqrt{x} + \sqrt{y} = \sqrt{17 + 4\sqrt{15}}$.
Then $\sqrt{x} - \sqrt{y} = \sqrt{17 - 4\sqrt{15}}$.
By multiplying,
$x - y = \sqrt{289 - 240}$.
$\therefore x - y = 7$.
But $x + y = 17$.
$\therefore x = 12$,
and $y = 5$.
$\therefore \sqrt{x} + \sqrt{y} = \sqrt{12} + \sqrt{5}$
$= 2\sqrt{3} + \sqrt{5}$.

3.

Let $\sqrt{x} + \sqrt{y} = \sqrt{10 + 2\sqrt{21}}$.
Then $\sqrt{x} - \sqrt{y} = \sqrt{10 - 2\sqrt{21}}$.
By multiplying,
$x - y = \sqrt{100 - 84}$.
$\therefore x - y = 4$.
But $x + y = 10$.
$\therefore x = 7$,
and $y = 3$.
$\therefore \sqrt{x} + \sqrt{y} = \sqrt{7} + \sqrt{3}$.
$\therefore \sqrt{10 + 2\sqrt{21}} = \sqrt{7} + \sqrt{3}$.

4.

Let $\sqrt{x} + \sqrt{y} = \sqrt{16 + 2\sqrt{55}}$.
Then $\sqrt{x} - \sqrt{y} = \sqrt{16 - 2\sqrt{55}}$.
By multiplying,
$x - y = \sqrt{256 - 220}$.
$\therefore x - y = 6$.
But $x + y = 16$.
$\therefore x = 11$,
and $y = 5$.
$\therefore \sqrt{x} + \sqrt{y} = \sqrt{11} + \sqrt{5}$.

5.

Let $\sqrt{x}-\sqrt{y}=\sqrt{9-2\sqrt{14}}$.

Then $\sqrt{x}+\sqrt{y}=\sqrt{9+2\sqrt{14}}$.

By multiplying,

$x-y=\sqrt{25}$.

$\therefore x-y=5$.

But $x+y=9$.

$\therefore x=7$,

and $y=2$.

$\therefore \sqrt{x}-\sqrt{y}=\sqrt{7}-\sqrt{2}$.

6.

Let $\sqrt{x}-\sqrt{y}=\sqrt{20-8\sqrt{6}}$.

Then $\sqrt{x}+\sqrt{y}=\sqrt{20+8\sqrt{6}}$.

By multiplying,

$x-y=\sqrt{400-384}$.

$\therefore x-y=4$.

But $x+y=20$.

$\therefore x=12$,

and $y=8$.

$\therefore \sqrt{x}-\sqrt{y}=\sqrt{12}-\sqrt{8}$

$=2(\sqrt{3}-\sqrt{2})$.

7.

Let $\sqrt{x}-\sqrt{y}=\sqrt{9-6\sqrt{2}}$.

Then $\sqrt{x}+\sqrt{y}=\sqrt{9+6\sqrt{2}}$.

By multiplying,

$x-y=\sqrt{81-72}$.

$\therefore x-y=3$.

But $x+y=9$.

$\therefore x=6$,

and $y=3$.

$\therefore \sqrt{x}-\sqrt{y}=\sqrt{6}-\sqrt{3}$.

8.

Let $\sqrt{x}-\sqrt{y}=\sqrt{94-42\sqrt{5}}$.

Then $\sqrt{x}+\sqrt{y}=\sqrt{94+42\sqrt{5}}$.

By multiplying,

$x-y=\sqrt{8836-8820}$.

$\therefore x-y=4$.

But $x+y=94$.

$\therefore x=49$,

and $y=45$.

$\therefore \sqrt{x}-\sqrt{y}=7-3\sqrt{5}$.

9.

Let $\sqrt{x}-\sqrt{y}=\sqrt{13-2\sqrt{30}}$.

Then $\sqrt{x}+\sqrt{y}=\sqrt{13+2\sqrt{30}}$.

By multiplying,

$x-y=\sqrt{169-120}$.

$\therefore x-y=7$.

But $x+y=13$.

$\therefore x=10$,

and $y=3$.

$\therefore \sqrt{x}-\sqrt{y}=\sqrt{10}-\sqrt{3}$.

10.

Let $\sqrt{x}-\sqrt{y}=\sqrt{11-6\sqrt{2}}$.

Then $\sqrt{x}+\sqrt{y}=\sqrt{11+6\sqrt{2}}$.

By multiplying,

$x-y=\sqrt{121-72}$.

$\therefore x-y=7$.

But $x+y=11$.

$\therefore x=9$,

and $y=2$.

$\therefore \sqrt{x}-\sqrt{y}=3-\sqrt{2}$.

11.

Let $\sqrt{x}-\sqrt{y}=\sqrt{14-4\sqrt{6}}$.

Then $\sqrt{x}+\sqrt{y}=\sqrt{14+4\sqrt{6}}$.

By multiplying,

$x-y=\sqrt{196-96}$.

$\therefore x-y=10$.

But $x+y=14$.

$\therefore x=12$,

and $y=2$.

$\therefore \sqrt{x}-\sqrt{y}=2\sqrt{3}-\sqrt{2}$.

12.

Let $\sqrt{x}-\sqrt{y}=\sqrt{38-12\sqrt{10}}$.

Then $\sqrt{x}+\sqrt{y}=\sqrt{38+12\sqrt{10}}$.

By multiplying,

$x-y=\sqrt{1444-1440}$.

$\therefore x-y=2$.

But $x+y=38$.

$\therefore x=20$,

and $y=18$.

$\therefore \sqrt{x}-\sqrt{y}=2\sqrt{5}-3\sqrt{2}$.

13.

Let $\sqrt{x}-\sqrt{y}=\sqrt{103-12\sqrt{11}}$.

Then $\sqrt{x}+\sqrt{y}=\sqrt{103+12\sqrt{11}}$.

By multiplying,

$x-y=\sqrt{10609-1584}$.

$\therefore x-y=95$.

But $x+y=103$.

$\therefore x=99$,

and $y=4$.

$\therefore \sqrt{x}-\sqrt{y}=3\sqrt{11}-2$.

14.

Let $\sqrt{x}-\sqrt{y}=\sqrt{57-12\sqrt{15}}$.

Then $\sqrt{x}+\sqrt{y}=\sqrt{57+12\sqrt{15}}$.

By multiplying,

$x-y=\sqrt{3249-2160}$.

$\therefore x-y=33$.

But $x+y=57$.

$\therefore x=45$,

and $y=12$.

$\therefore \sqrt{x}-\sqrt{y}=3\sqrt{5}-2\sqrt{3}$.

15.

Let $\sqrt{x}-\sqrt{y}=\sqrt{\frac{7}{2}-\sqrt{10}}$.

Then $\sqrt{x}+\sqrt{y}=\sqrt{\frac{7}{2}+\sqrt{10}}$.

By multiplying,

$x-y=\sqrt{\frac{49}{4}-10}$.

$\therefore x-y=\frac{3}{2}$.

But $x+y=\frac{7}{2}$.

$\therefore x=\frac{5}{2}$,

and $y=1$.

$\therefore \sqrt{x}-\sqrt{y}=\frac{1}{2}\sqrt{10}-1$.

16.

Let $\sqrt{x}+\sqrt{y}=\sqrt{2a+2\sqrt{a^2-b^2}}$.

Then $\sqrt{x}-\sqrt{y}=\sqrt{2a-2\sqrt{a^2-b^2}}$.

By multiplying,

$x-y=\sqrt{4a^2-4a^2+4b^2}$.

$\therefore x-y=2b$.

But $x+y=2a$.

$\therefore x=a+b$,

and $y=a-b$.

$\therefore \sqrt{x}+\sqrt{y}=\sqrt{a+b}+\sqrt{a-b}$.

17.

Let $\sqrt{x}-\sqrt{y}=\sqrt{a^2-2b\sqrt{a^2-b^2}}$.

Then $\sqrt{x}+\sqrt{y}=\sqrt{a^2+2b\sqrt{a^2-b^2}}$.

By multiplying,

$$x-y=\sqrt{a^4-4a^2b^2+4b^4}.$$

$$\therefore x-y=a^2-2b^2.$$

But $x+y=a^2$.

$$\therefore x=a^2-b^2,$$

and $y=b^2$.

$$\therefore \sqrt{x}-\sqrt{y}=\sqrt{a^2-b^2}-b.$$

18.

Let $\sqrt{x}-\sqrt{y}=\sqrt{87-12\sqrt{42}}$.

Then $x-y=\sqrt{7569-6048}$.

$$\therefore x-y=39.$$

But $x+y=87$.

$$\therefore x=63,$$

and $y=24$.

$$\therefore \sqrt{x}-\sqrt{y}=\sqrt{63}-\sqrt{24}$$
$$=3\sqrt{7}-2\sqrt{6}.$$

19.

Let $\sqrt{x}-\sqrt{y}=\sqrt{(a+b)^2-4(a-b)\sqrt{ab}}$.

Then $\sqrt{x}+\sqrt{y}=\sqrt{(a+b)^2+4(a-b)\sqrt{ab}}$.

$$\therefore x-y=\sqrt{a^4-12a^3b+38a^2b^2-12ab^3+b^4}$$
$$=a^2-6ab+b^2.$$

But $x+y=a^2+2ab+b^2$.

$$\therefore x=(a-b)^2,$$

and $y=4ab$.

$$\therefore \sqrt{x}-\sqrt{y}=a-b-2\sqrt{ab}.$$

Exercise 93.

1. $\sqrt{-4} + \sqrt{-25} = 2\sqrt{-1} + 5\sqrt{-1} = 7\sqrt{-1}$.

2. $\sqrt{-81} - \sqrt{-36} = 9\sqrt{-1} - 6\sqrt{-1} = 3\sqrt{-1}$.

3. $\sqrt{-144} + \sqrt{-100} = 12\sqrt{-1} + 10\sqrt{-1} = 22\sqrt{-1}$.

4. $\sqrt{-256} - \sqrt{-16} = 16\sqrt{-1} - 4\sqrt{-1} = 12\sqrt{-1}$.

5. $\sqrt{-121} - \sqrt{-49} = 11\sqrt{-1} - 7\sqrt{-1} = 4\sqrt{-1}$.

6. $\sqrt{-a^4} + \sqrt{-4a^2} - \sqrt{-16a^4} = a^2\sqrt{-1} + 2a\sqrt{-1} - 4a^2\sqrt{-1}$
$= (2a - 3a^2)\sqrt{-1}$.

7. $\sqrt{-16a^6} + \sqrt{-49a^2} + \sqrt{-4a^4} = 4a^3\sqrt{-1} + 7a\sqrt{-1} + 2a^2\sqrt{-1}$
$= (4a^3 + 7a + 2a^2)\sqrt{-1}$.

8. $\sqrt{-m} + \sqrt{-n} - \sqrt{-4} = m^{\frac{1}{2}}\sqrt{-1} + n^{\frac{1}{2}}\sqrt{-1} - 2\sqrt{-1}$
$= (m^{\frac{1}{2}} + n^{\frac{1}{2}} - 2)\sqrt{-1}$.

9. $3a\sqrt{-4a^2} + 2a^2\sqrt{-49} = 6a^2\sqrt{-1} + 14a^2\sqrt{-1}$
$= 20a^2\sqrt{-1}$.

10. $\sqrt{18} + \sqrt{-18} - \sqrt{-8} = 3\sqrt{2} + 3\sqrt{-2} - 2\sqrt{-2}$
$= 3\sqrt{2} - \sqrt{-2} = 3\sqrt{2} - 2^{\frac{1}{2}}\sqrt{-1}$.

11. $(1 + \sqrt{-4})(1 - \sqrt{-4}) = (1 + 2\sqrt{-1})(1 - 2\sqrt{-1})$
$= 1 - 2(-1) = 1 + 2 = 3$.

12. $(4 + \sqrt{-3})(4 - \sqrt{-3}) = (4 + 3^{\frac{1}{2}}\sqrt{-1})(4 - 3^{\frac{1}{2}}\sqrt{-1})$
$= 16 - 3(-1) = 16 + 3 = 19$.

13. $(\sqrt{3} - 2\sqrt{-2})(\sqrt{3} + 2\sqrt{-2})$
$= (\sqrt{3} - 2 \times 2^{\frac{1}{2}}\sqrt{-1})(\sqrt{3} + 2 \times 2^{\frac{1}{2}}\sqrt{-1}) = 3 - 4 \times 2 \times (-1)$
$= 3 + 8 = 11$.

14. $(\sqrt{54}-\sqrt{-2})(\sqrt{54}+\sqrt{-2})$
$=(3\sqrt{6}-2^{\frac{1}{2}}\sqrt{-1})(3\sqrt{6}+2^{\frac{1}{2}}\sqrt{-1})=54-2(-1)=54+2=56.$

15. $(\sqrt{-a}+\sqrt{-b})(\sqrt{-a}-\sqrt{-b})$
$=(a^{\frac{1}{2}}\sqrt{-1}+b^{\frac{1}{2}}\sqrt{-1})(a^{\frac{1}{2}}\sqrt{-1}-b^{\frac{1}{2}}\sqrt{-1})=a(-1)-b(-1)$
$=-a+b=b-a.$

16. $(a\sqrt{-a^2b^4})(a\sqrt{-a^4b^5})=(a^2b^2\sqrt{-1})(a^3b^{\frac{5}{2}}\sqrt{-1})=a^5b^{\frac{9}{2}}(-1)$
$=-a^5b^{\frac{9}{2}}=-a^5b^4\sqrt{b}.$

17. $(2\sqrt{3}-\sqrt{-5})(2\sqrt{3}+\sqrt{-5})=(2\sqrt{3}-5^{\frac{1}{2}}\sqrt{-1})(2\sqrt{3}+5^{\frac{1}{2}}\sqrt{-1})$
$=12-5(-1)=12+5=17.$

18. $(\sqrt{-10})(\sqrt{-2})=(10^{\frac{1}{2}}\sqrt{-1})(2^{\frac{1}{2}}\sqrt{-1})=(20)^{\frac{1}{2}}(-1)$
$=4^{\frac{1}{2}}\times5^{\frac{1}{2}}\times(-1)=2\times5^{\frac{1}{2}}\times(-1)=-2\sqrt{5}.$

19. $\dfrac{\sqrt{-12}}{\sqrt{-3}}=\dfrac{12^{\frac{1}{2}}\sqrt{-1}}{3^{\frac{1}{2}}\sqrt{-1}}=4^{\frac{1}{2}}=2.$

20 $\dfrac{\sqrt{15}}{\sqrt{-5}}=\dfrac{5^{\frac{1}{2}}\times3^{\frac{1}{2}}}{5^{\frac{1}{2}}\sqrt{-1}}=\dfrac{3^{\frac{1}{2}}}{\sqrt{-1}}=\dfrac{3^{\frac{1}{2}}\sqrt{-1}}{-1}=-\sqrt{-3}.$

21. $\dfrac{\sqrt{-5}}{\sqrt{-20}}=\dfrac{5^{\frac{1}{2}}\sqrt{-1}}{4^{\frac{1}{2}}\times5^{\frac{1}{2}}\sqrt{-1}}=\dfrac{1}{4^{\frac{1}{2}}}=\dfrac{1}{2}.$

22. $\dfrac{a}{\sqrt{-a}}=\dfrac{a}{a^{\frac{1}{2}}\sqrt{-1}}=\dfrac{a\sqrt{-1}}{-a^{\frac{1}{2}}}=-a^{\frac{1}{2}}\sqrt{-1}=-\sqrt{-a}.$

23. $\dfrac{-\sqrt{25}}{\sqrt{-5}}=\dfrac{-5}{5^{\frac{1}{2}}\sqrt{-1}}=\dfrac{-5\sqrt{-1}}{-5^{\frac{1}{2}}}=5^{\frac{1}{2}}\sqrt{-1}=\sqrt{-5}.$

24. $\dfrac{-\sqrt{-25}}{-\sqrt{-5}}=\dfrac{5\sqrt{-1}}{5^{\frac{1}{2}}\sqrt{-1}}=5^{\frac{1}{2}}=\sqrt{5}.$

25. $\dfrac{4\sqrt{-20}}{-2\sqrt{-25}}=\dfrac{8\sqrt{-5}}{-10\sqrt{-1}}=\dfrac{8\times5^{\frac{1}{2}}\sqrt{-1}}{-10\sqrt{-1}}=\dfrac{8\sqrt{5}}{10}=\frac{4}{5}\sqrt{5}.$

26. $\dfrac{4+\sqrt{-2}}{2-\sqrt{-2}}=\dfrac{(4+\sqrt{-2})(2+\sqrt{-2})}{(2-\sqrt{-2})(2+\sqrt{-2})}=\dfrac{6+6\sqrt{-2}}{6}=1+\sqrt{-2}.$

4. $\sqrt[3]{128} + \sqrt[3]{686} + \sqrt[3]{16} = 4\sqrt[3]{2} + 7\sqrt[3]{2} + 2\sqrt[3]{2}$
$= (4 + 7 + 2)\sqrt[3]{2} = 13\sqrt[3]{2}.$

5. $12\sqrt{72} - 3\sqrt{128} = 72\sqrt{2} - 24\sqrt{2} = 48\sqrt{2}.$

6. $2\sqrt{3} + 3\sqrt{1\frac{1}{3}} - \sqrt{5\frac{1}{3}} = 2\sqrt{3} + 3\sqrt{\frac{4}{9} \times 3} - \sqrt{\frac{16}{9} \times 3}$
$= 2\sqrt{3} + 2\sqrt{3} - \frac{4}{3}\sqrt{3} = 2\frac{2}{3}\sqrt{3}.$

7. $\sqrt{1000} + \sqrt{50} + \sqrt{288} = 10\sqrt{10} + 5\sqrt{2} + 12\sqrt{2} = 10\sqrt{10} + 17\sqrt{2}.$

8. $\sqrt[3]{54} + 3\sqrt[3]{16} + \sqrt[3]{432} = 3\sqrt[3]{2} + 6\sqrt[3]{2} + 6\sqrt[3]{2} = 15\sqrt[3]{2}.$

9. $7\sqrt[3]{81} - 3\sqrt[3]{1029} = 21\sqrt[3]{3} - 21\sqrt[3]{3} = 0.$

10. $\sqrt{\frac{1}{3}} + \sqrt{60} - \sqrt{15} - \sqrt{\frac{4}{3}} = \frac{1}{3}\sqrt{15} + 2\sqrt{15} - 1\sqrt{15} - \frac{1}{3}\sqrt{15}$
$= 1\frac{2}{15}\sqrt{15}.$

11. $\sqrt{\frac{a^4c}{b^3}} - \sqrt{\frac{a^2c^3}{bd^2}} - \sqrt{\frac{a^2cd^2}{bm^2}} = \frac{a^2}{b^2}\sqrt{bc} - \frac{ac}{bd}\sqrt{bc} - \frac{ad}{bm}\sqrt{bc}$
$= \left(\frac{a^2}{b^2} - \frac{ac}{bd} - \frac{ad}{bm}\right)\sqrt{bc}$
$= \frac{a}{b}\left(\frac{a}{b} - \frac{c}{d} - \frac{d}{m}\right)\sqrt{bc}.$

12. $\sqrt{\frac{2}{5}} + \sqrt{\frac{1}{10}} - \sqrt{\frac{1}{40}} = \frac{1}{5}\sqrt{10} + \frac{1}{10}\sqrt{10} - \frac{1}{20}\sqrt{10} = \frac{1}{4}\sqrt{10}.$

13. $\sqrt{4a^3b} + \sqrt{25ab^3} - (a - 5b)\sqrt{ab} = 2a\sqrt{ab} + 5b\sqrt{ab} - (a - 5b)\sqrt{ab}$
$= (a + 10b)\sqrt{ab}.$

14. $c\sqrt[5]{a^6b^7c^3} - a\sqrt[5]{ab^7c^8} + b\sqrt[5]{a^6b^2c^8}$
$= abc\sqrt[5]{ab^2c^3} - abc\sqrt[5]{ab^2c^3} + abc\sqrt[5]{ab^2c^3} = abc\sqrt[5]{ab^2c^3}.$

15. $2\sqrt[3]{40} + 3\sqrt[3]{108} + \sqrt[3]{500} - \sqrt[3]{320} - 2\sqrt[3]{1372}$
$= 4\sqrt[3]{5} + 9\sqrt[3]{4} + 5\sqrt[3]{4} - 4\sqrt[3]{5} - 14\sqrt[3]{4} = 0.$

16. $\sqrt{363} - 2\sqrt{243} + \sqrt{108} - 2\sqrt{147}$
$= 11\sqrt{3} - 18\sqrt{3} + 6\sqrt{3} - 14\sqrt{3} = -15\sqrt{3}.$

17. $\sqrt[3]{189} - 2\sqrt[3]{448} + \sqrt[3]{875} + \sqrt[3]{1512}$
$= 3\sqrt[3]{7} - 8\sqrt[3]{7} + 5\sqrt[3]{7} + 6\sqrt[3]{7} = 6\sqrt[3]{7}.$

18. $\sqrt[4]{162} - \sqrt[4]{512} + 2\sqrt[4]{32} - \sqrt[4]{1250} = 3\sqrt[4]{2} - 4\sqrt[4]{2} + 4\sqrt[4]{2} - 5\sqrt[4]{2}$
$= -2\sqrt[4]{2}.$

19. $\sqrt[3]{-81} - 3\sqrt[3]{-24} + 2\sqrt[3]{192} = -3\sqrt[3]{3} + 6\sqrt[3]{3} + 8\sqrt[3]{3} = 11\sqrt[3]{3}.$

20. $\sqrt{20} + \sqrt{45} - \sqrt{\tfrac{1}{5}} = 2\sqrt{5} + 3\sqrt{5} - \tfrac{2}{5}\sqrt{5} = 4\tfrac{3}{5}\sqrt{5}.$

21. $2\sqrt[3]{a^3b^2} + \sqrt[3]{8b^5} - \frac{1}{2}\sqrt[3]{\frac{a^6}{b}} = 2a\sqrt[3]{b^2} + 2b\sqrt[3]{b^2} - \frac{a^2}{2b}\sqrt[3]{b^2}$
$= \left(2a + 2b - \frac{a^2}{2b}\right)\sqrt[3]{b^2}.$

22. $\sqrt{50} + \tfrac{3}{2}\sqrt{288} - \frac{1}{\sqrt{2}} - \frac{3}{\sqrt{450}} = 5\sqrt{2} + 30\sqrt{2} - \tfrac{1}{2}\sqrt{2} - \tfrac{1}{10}\sqrt{2}$
$= 34\tfrac{2}{5}\sqrt{2}.$

23. $\sqrt{1701} + \tfrac{1}{4}\sqrt{84} - \tfrac{1}{5}\sqrt{525} = 9\sqrt{21} + \tfrac{1}{2}\sqrt{21} - 1\sqrt{21} = 8\tfrac{1}{2}\sqrt{21}.$

Exercise 87.

1. $3\sqrt{2} \times 4\sqrt{6} = 12\sqrt{12} = 24\sqrt{3}.$

2. $2\sqrt{5} \times 3\sqrt{15} = 6\sqrt{75} = 30\sqrt{3}.$

3. $2\sqrt{10} \times 5\sqrt{14} = 10\sqrt{140} = 20\sqrt{35}.$

4. $3\sqrt{27} \times 7\sqrt{48} = 9\sqrt{3} \times 28\sqrt{3} = 9 \times 28 \times 3 = 756.$

5. $2\sqrt[3]{4} \times 5\sqrt[3]{32} = 2\sqrt[3]{4} \times 10\sqrt[3]{4} = 20\sqrt[3]{16} = 40\sqrt[3]{2}.$

6. $\tfrac{2}{7}\sqrt{10} \times \tfrac{7}{10}\sqrt{15} = \tfrac{1}{5}\sqrt{150} = \sqrt{6}.$

7. $5\sqrt{\tfrac{2}{7}} \times \tfrac{3}{7}\sqrt{162} = 5\sqrt{\tfrac{2}{7}} \times \tfrac{27}{7}\sqrt{2} = \tfrac{135}{49}\sqrt{\tfrac{4}{7}} = \tfrac{135}{49}\sqrt{28}.$

8. $\tfrac{3}{8}\sqrt{21} \times \tfrac{9}{10}\sqrt{\tfrac{7}{20}} = \tfrac{27}{80}\sqrt{\tfrac{147}{20}} = \tfrac{189}{800}\sqrt{\tfrac{3}{20}} = \tfrac{189}{800}\sqrt{15}.$

9. $\sqrt[3]{108} \times 5\sqrt{32} = 3\sqrt[3]{4} \times 20\sqrt{2} = 3\sqrt[6]{16} \times 20\sqrt[6]{8} = 60\sqrt[6]{128}$
$= 60\sqrt[6]{2^7} = 120\sqrt[6]{2}.$

10. $5\sqrt[3]{54} \times 7\sqrt{48} = 15\sqrt[3]{2} \times 28\sqrt{3} = 15\sqrt[6]{4} \times 28\sqrt[6]{27} = 420\sqrt[6]{108}.$

Exercise 88.

1. $(2\sqrt{x}-7)\times 3\sqrt{x}$.

$$\begin{array}{r} 2\sqrt{x}-7 \\ 3\sqrt{x} \\ \hline 6x-21\sqrt{x} \end{array}$$

2. $(\sqrt{a}-\sqrt{b})^2$.

$$\begin{array}{r} a^{\frac{1}{2}}-b^{\frac{1}{2}} \\ a^{\frac{1}{2}}-b^{\frac{1}{2}} \\ \hline a- a^{\frac{1}{2}}b^{\frac{1}{2}} \\ \quad - a^{\frac{1}{2}}b^{\frac{1}{2}}+b \\ \hline a-2a^{\frac{1}{2}}b^{\frac{1}{2}}+b \end{array}$$

3. $(3\sqrt{5}-7\sqrt{2})^2$.

$$\begin{array}{r} 3\sqrt{5}-7\sqrt{2} \\ 3\sqrt{5}-7\sqrt{2} \\ \hline 45-21\sqrt{10} \\ \quad -21\sqrt{10}+98 \\ \hline 143-42\sqrt{10} \end{array}$$

4. $(\sqrt{7}+3\sqrt{3})(\sqrt{7}-2\sqrt{3})$.

$$\begin{array}{r} \sqrt{7}+3\sqrt{3} \\ \sqrt{7}-2\sqrt{3} \\ \hline 7+3\sqrt{21} \\ \quad -2\sqrt{21}-18 \\ \hline -11+\sqrt{21} \end{array}$$

5. $(3\sqrt{5}-\sqrt{2})(\sqrt{5}-3\sqrt{2})$.

$$\begin{array}{r} 3\sqrt{5}-\sqrt{2} \\ \sqrt{5}-3\sqrt{2} \\ \hline 15- 1\sqrt{10} \\ \quad -9\sqrt{10}+6 \\ \hline 21-10\sqrt{10} \end{array}$$

6. $(\sqrt{2}+\sqrt{3}-\sqrt{5})^2$.

$$\begin{array}{r} \sqrt{2}+\sqrt{3}-\sqrt{5} \\ \sqrt{2}+\sqrt{3}-\sqrt{5} \\ \hline 2+\sqrt{6}-\sqrt{10} \\ \quad +\sqrt{6} \qquad +3-\sqrt{15} \\ \qquad -\sqrt{10} \qquad -\sqrt{15}+5 \\ \hline 10+2\sqrt{6}-2\sqrt{10}-2\sqrt{15} \end{array}$$

7. $(\sqrt{5}+3\sqrt{2}+\sqrt{7})^2$.

$$\begin{array}{r} \sqrt{5}+3\sqrt{2}+\sqrt{7} \\ \sqrt{5}+3\sqrt{2}+\sqrt{7} \\ \hline 5+3\sqrt{10}+\sqrt{35} \\ \quad +3\sqrt{10} \qquad +18+3\sqrt{14} \\ \qquad +\sqrt{35} \qquad +3\sqrt{14}+7 \\ \hline 30+6\sqrt{10}+2\sqrt{35} \qquad +6\sqrt{14} \end{array}$$

8. $(2\sqrt{5}-\sqrt{2}-\sqrt{7})^2$.

$$\begin{array}{r} 2\sqrt{5}-\sqrt{2}-\sqrt{7} \\ 2\sqrt{5}-\sqrt{2}-\sqrt{7} \\ \hline 20-2\sqrt{10}-2\sqrt{35} \\ -2\sqrt{10}\qquad +2+\sqrt{14} \\ \qquad -2\sqrt{35}\quad +\sqrt{14}+7 \\ \hline 29-4\sqrt{10}-4\sqrt{35}+2\sqrt{14} \end{array}$$

9. $(2\sqrt{x}+\sqrt{3-2x})^2$.

$$\begin{array}{r} 2\sqrt{x}+\sqrt{3-2x} \\ 2\sqrt{x}+\sqrt{3-2x} \\ \hline 4x+2\sqrt{3x-2x^2} \\ \quad +2\sqrt{3x-2x^2}+3-2x \\ \hline 3+2x+4\sqrt{3x-2x^2} \end{array}$$

10. $(2\sqrt{a^2+b^2}-3\sqrt{a^2-b^2})^2$.

$$\begin{array}{r} 2\sqrt{a^2+b^2}-3\sqrt{a^2-b^2} \\ 2\sqrt{a^2+b^2}-3\sqrt{a^2-b^2} \\ \hline 4(a^2+b^2)-6\sqrt{a^4-b^4} \\ \qquad -6\sqrt{a^4-b^4}+9(a^2-b^2) \\ \hline 4a^2+4b^2-12\sqrt{a^4-b^4}+9a^2-9b^2 \\ =13a^2-5b^2-12\sqrt{a^4-b^4}. \end{array}$$

Exercise 89.

1. $\sqrt{162}\div\sqrt{2}=\sqrt{81}=9$.
2. $\sqrt[3]{81}\div\sqrt[3]{3}=\sqrt[3]{27}=3$.
3. $\sqrt{2a^{11}}\div\sqrt{a^3}=\sqrt{2a^8}=a^4\sqrt{2}$.
4. $\sqrt{\frac{1}{3}}\div\sqrt{\frac{3}{7}}=\sqrt{\frac{1}{3}}\times\sqrt{\frac{7}{3}}=\sqrt{\frac{7}{9}}=\frac{1}{3}\sqrt{7}$.
5. $\sqrt{\frac{5}{12}}\div\sqrt{\frac{3}{5}}=\sqrt{\frac{5}{12}}\times\sqrt{\frac{5}{3}}=\sqrt{\frac{25}{36}}=\frac{5}{6}$.

6. $2\sqrt{\frac{1}{2}} + \frac{1}{4}\sqrt{\frac{1}{8}} = 2 \times \frac{1}{2}\sqrt{\frac{1}{2} \times \frac{1}{2}} = \frac{1}{2}\sqrt{\frac{1}{4}} = \frac{1}{4}\sqrt{3}.$

7. $\sqrt{5} + \sqrt[3]{4} = \sqrt[6]{125} + \sqrt[6]{16} = \sqrt[6]{\frac{125}{16}} = \sqrt[6]{\frac{500}{64}} = \frac{1}{2}\sqrt[6]{500}.$

8. $\sqrt{\frac{1}{8}} + \sqrt[3]{\frac{1}{2}} = \frac{1}{4}\sqrt{2} + \frac{1}{2}\sqrt[3]{4} = \frac{1}{4}\sqrt[6]{8} + \frac{1}{2}\sqrt[6]{16} = \frac{3}{4}\sqrt[6]{\frac{1}{2}} = \frac{1}{8}\sqrt[6]{32}.$

9. $\sqrt[3]{\frac{5}{8}} + \sqrt{\frac{3}{8}} = \sqrt[6]{\frac{25}{36}} + \sqrt[6]{\frac{27}{125}} = \sqrt[6]{\frac{25}{36} \times \frac{125}{27}} = \sqrt[6]{\frac{5^5}{3^5 \times 2^2}}$
$= \frac{1}{6}\sqrt[6]{5^5 \times 3 \times 2^4}.$

10. $\frac{3\sqrt{2} + \sqrt{72} - 3\sqrt{8}}{\sqrt{3}} = \sqrt{3} \times \sqrt{2} + \sqrt{24} - \sqrt{3} \times \sqrt{8}$
$= \sqrt{6} + 2\sqrt{6} - 2\sqrt{6} = \sqrt{6}.$

11. $\frac{9\sqrt[3]{2} - 6\sqrt[3]{6} - 3\sqrt[3]{8} + 12\sqrt[3]{32}}{3\sqrt[3]{2}} = 3 - 2\sqrt[3]{3} - \sqrt[3]{4} + 4\sqrt[3]{16}$
$= 3 - 2\sqrt[3]{3} - \sqrt[3]{4} + 8\sqrt[3]{2}.$

12. $\frac{\sqrt[3]{2} - \sqrt[3]{6} + \sqrt[3]{10} - \sqrt[3]{12}}{\sqrt[3]{2}} = 1 - \sqrt[3]{3} + \sqrt[3]{5} - \sqrt[3]{6}.$

EXERCISE 90.

1. $\frac{2}{\sqrt{3}} = \frac{2}{3}\sqrt{3} = \frac{2}{3}$ of $1.732+ = 1.155+.$

2. $\frac{1}{\sqrt{5}} = \frac{1}{5}\sqrt{5} = \frac{1}{5}$ of $2.236+ = 0.447+.$

3. $\frac{7\sqrt{2}}{\sqrt{3}} = \frac{7}{3}\sqrt{6} = \frac{7}{3}$ of $2.4494+ = 5.715+.$

4. $\frac{2\sqrt{5}}{3\sqrt{2}} = \frac{1}{3}\sqrt{10} = \frac{1}{3}$ of $3.162+ = 1.054+.$

5. $\frac{3}{\sqrt{7} + \sqrt{5}} = \frac{3(\sqrt{7} - \sqrt{5})}{7 - 5} = \frac{3}{2}(\sqrt{7} - \sqrt{5}).$

6. $\frac{7}{2\sqrt{5} - \sqrt{6}} = \frac{7(2\sqrt{5} + \sqrt{6})}{20 - 6} = \frac{1}{2}(2\sqrt{5} + \sqrt{6}) = \sqrt{5} + \frac{1}{2}\sqrt{6}.$

7. $\frac{6}{5 - 2\sqrt{6}} = \frac{6(5 + 2\sqrt{6})}{25 - 24} = 30 + 12\sqrt{6}.$

8. $\frac{4-\sqrt{2}}{1+\sqrt{2}} = \frac{(4-\sqrt{2})(1-\sqrt{2})}{1-2} = \frac{6-5\sqrt{2}}{-1} = 5\sqrt{2}-6.$

9. $\frac{\sqrt{5}+\sqrt{2}}{\sqrt{5}-\sqrt{2}} = \frac{(\sqrt{5}+\sqrt{2})^2}{5-2} = \frac{9+2\sqrt{10}}{3} = 3+\frac{2}{3}\sqrt{10}.$

10. $\frac{7+2\sqrt{10}}{7-2\sqrt{10}} = \frac{(7+2\sqrt{10})^2}{49-40} = \frac{89+28\sqrt{10}}{9}.$

11. $\frac{\sqrt{5}-\sqrt{6}}{2\sqrt{5}-\sqrt{6}} = \frac{(\sqrt{5}-\sqrt{6})(2\sqrt{5}+\sqrt{6})}{20-6} = \frac{4-\sqrt{30}}{14}.$

12. $\frac{a+b}{a-\sqrt{b}} = \frac{(a+b)(a+\sqrt{b})}{a^2-b} = \frac{a^2+ab+(a+b)\sqrt{b}}{a^2-b}.$

13. $\frac{1}{\sqrt{5}+\sqrt{3}+\sqrt{7}} = \frac{\sqrt{5}-\sqrt{3}+\sqrt{7}}{9+2\sqrt{35}} = \frac{(\sqrt{5}-\sqrt{3}+\sqrt{7})(9-2\sqrt{35})}{81-140}$

$= \frac{5\sqrt{5}+9\sqrt{3}+\sqrt{7}-2\sqrt{105}}{59}.$

14. $\frac{2}{\sqrt{5}-3\sqrt{2}+\sqrt{7}} = \frac{2(\sqrt{5}+3\sqrt{2}+\sqrt{7})}{12+2\sqrt{35}} = \frac{\sqrt{5}+3\sqrt{2}+\sqrt{7}}{6+\sqrt{35}}$

$= \frac{(\sqrt{5}+3\sqrt{2}+\sqrt{7})(6-\sqrt{35})}{1}$

$= 18\sqrt{2}-\sqrt{5}+\sqrt{7}-3\sqrt{70}.$

EXERCISE 91.

1. $(\sqrt[3]{8})^4 = (\sqrt[3]{2^3})^4 = (2^{\frac{1}{3}})^4 = 2^{\frac{4}{3}} = 2\sqrt[3]{2}.$

2. $(\sqrt[3]{64})^3 = (\sqrt[3]{2^6})^3 = (2^{\frac{2}{3}})^3 = 2^{\frac{2}{4}} = 4\sqrt[4]{2}.$

3. $(\sqrt[4]{4})^2 = (\sqrt[4]{2^2})^2 = (2^{\frac{2}{4}})^2 = 2^{\frac{4}{3}} = 2\sqrt[3]{2}.$

4. $(a\sqrt[3]{a})^3 = (a^{\frac{4}{3}})^3 = a^4.$

5. $(x\sqrt[3]{x})^2 = (x^{\frac{4}{3}})^2 = x^{\frac{8}{3}} = x^2\sqrt[3]{x^2}.$

6. $(3\sqrt[6]{3})^3 = (3^{\frac{7}{6}})^3 = 3^{\frac{7}{2}} = 9\sqrt{3}$.

7. $(\sqrt[3]{256})^{\frac{1}{4}} = (\sqrt[3]{2^8})^{\frac{1}{4}} = 2^{\frac{2}{3}} = \sqrt[3]{4}$.

8. $\left(\frac{a}{3}\sqrt{\frac{a}{3}}\right)^{\frac{1}{3}} = \left(\frac{a^{\frac{3}{2}}}{3^{\frac{3}{2}}}\right)^{\frac{1}{3}} = \frac{a^{\frac{1}{2}}}{3^{\frac{1}{2}}} = \sqrt{\frac{a}{3}}$.

9. $(2\sqrt[6]{4a^4b})^{\frac{1}{3}} = (2\sqrt[6]{2^2a^4b})^{\frac{1}{3}} = \sqrt[6]{2^8a^4b} = (\sqrt[6]{2^8a^4b})^{\frac{1}{3}} = (2^{\frac{4}{3}}a^{\frac{2}{3}}b^{\frac{1}{6}})^{\frac{1}{3}}$
$= 2^{\frac{4}{9}}a^{\frac{2}{9}}b^{\frac{1}{18}} = 2^{\frac{8}{18}}a^{\frac{4}{18}}b^{\frac{1}{18}} = \sqrt[18]{256a^4b}$.

Exercise 92.

1.

Let $\sqrt{x} + \sqrt{y} = \sqrt{14 + 6\sqrt{5}}$.
Then $\sqrt{x} - \sqrt{y} = \sqrt{14 - 6\sqrt{5}}$.
By multiplying,
$x - y = \sqrt{196 - 180}$.
$\therefore x - y = 4$.
But $x + y = 14$.
$\therefore x = 9$,
and $y = 5$.
$\therefore \sqrt{x} + \sqrt{y} = 3 + \sqrt{5}$.
$\therefore \sqrt{14 + 6\sqrt{5}} = 3 + \sqrt{5}$.

2.

Let $\sqrt{x} + \sqrt{y} = \sqrt{17 + 4\sqrt{15}}$.
Then $\sqrt{x} - \sqrt{y} = \sqrt{17 - 4\sqrt{15}}$.
By multiplying,
$x - y = \sqrt{289 - 240}$.
$\therefore x - y = 7$.
But $x + y = 17$.
$\therefore x = 12$,
and $y = 5$.
$\therefore \sqrt{x} + \sqrt{y} = \sqrt{12} + \sqrt{5}$
$= 2\sqrt{3} + \sqrt{5}$.

3.

Let $\sqrt{x} + \sqrt{y} = \sqrt{10 + 2\sqrt{21}}$.
Then $\sqrt{x} - \sqrt{y} = \sqrt{10 - 2\sqrt{21}}$.
By multiplying,
$x - y = \sqrt{100 - 84}$.
$\therefore x - y = 4$.
But $x + y = 10$.
$\therefore x = 7$,
and $y = 3$.
$\therefore \sqrt{x} + \sqrt{y} = \sqrt{7} + \sqrt{3}$.
$\therefore \sqrt{10 + 2\sqrt{21}} = \sqrt{7} + \sqrt{3}$.

4.

Let $\sqrt{x} + \sqrt{y} = \sqrt{16 + 2\sqrt{55}}$.
Then $\sqrt{x} - \sqrt{y} = \sqrt{16 - 2\sqrt{55}}$.
By multiplying,
$x - y = \sqrt{256 - 220}$.
$\therefore x - y = 6$.
But $x + y = 16$.
$\therefore x = 11$,
and $y = 5$.
$\therefore \sqrt{x} + \sqrt{y} = \sqrt{11} + \sqrt{5}$.

5.

Let $\sqrt{x}-\sqrt{y}=\sqrt{9-2\sqrt{14}}$.

Then $\sqrt{x}+\sqrt{y}=\sqrt{9+2\sqrt{14}}$.

By multiplying,

$x-y=\sqrt{25}$.

$\therefore x-y=5$.

But $x+y=9$.

$\therefore x=7$,

and $y=2$.

$\therefore \sqrt{x}-\sqrt{y}=\sqrt{7}-\sqrt{2}$.

6.

Let $\sqrt{x}-\sqrt{y}=\sqrt{20-8\sqrt{6}}$.

Then $\sqrt{x}+\sqrt{y}=\sqrt{20+8\sqrt{6}}$.

By multiplying,

$x-y=\sqrt{400-384}$.

$\therefore x-y=4$.

But $x+y=20$.

$\therefore x=12$,

and $y=8$.

$\therefore \sqrt{x}-\sqrt{y}=\sqrt{12}-\sqrt{8}$

$=2(\sqrt{3}-\sqrt{2})$.

7.

Let $\sqrt{x}-\sqrt{y}=\sqrt{9-6\sqrt{2}}$.

Then $\sqrt{x}+\sqrt{y}=\sqrt{9+6\sqrt{2}}$.

By multiplying,

$x-y=\sqrt{81-72}$.

$\therefore x-y=3$.

But $x+y=9$.

$\therefore x=6$,

and $y=3$.

$\therefore \sqrt{x}-\sqrt{y}=\sqrt{6}-\sqrt{3}$.

8.

Let $\sqrt{x}-\sqrt{y}=\sqrt{94-42\sqrt{5}}$.

Then $\sqrt{x}+\sqrt{y}=\sqrt{94+42\sqrt{5}}$.

By multiplying,

$x-y=\sqrt{8836-8820}$.

$\therefore x-y=4$.

But $x+y=94$.

$\therefore x=49$,

and $y=45$.

$\therefore \sqrt{x}-\sqrt{y}=7-3\sqrt{5}$.

9.

Let $\sqrt{x}-\sqrt{y}=\sqrt{13-2\sqrt{30}}$.

Then $\sqrt{x}+\sqrt{y}=\sqrt{13+2\sqrt{30}}$.

By multiplying,

$x-y=\sqrt{169-120}$.

$\therefore x-y=7$.

But $x+y=13$.

$\therefore x=10$,

and $y=3$.

$\therefore \sqrt{x}-\sqrt{y}=\sqrt{10}-\sqrt{3}$.

10.

Let $\sqrt{x}-\sqrt{y}=\sqrt{11-6\sqrt{2}}$.

Then $\sqrt{x}+\sqrt{y}=\sqrt{11+6\sqrt{2}}$.

By multiplying,

$x-y=\sqrt{121-72}$.

$\therefore x-y=7$.

But $x+y=11$.

$\therefore x=9$,

and $y=2$.

$\therefore \sqrt{x}-\sqrt{y}=3-\sqrt{2}$.

11.

Let $\sqrt{x}-\sqrt{y}=\sqrt{14-4\sqrt{6}}$.

Then $\sqrt{x}+\sqrt{y}=\sqrt{14+4\sqrt{6}}$.

By multiplying,

$x-y=\sqrt{196-96}$.

$\therefore x-y=10$.

But $x+y=14$.

$\therefore x=12$,

and $y=2$.

$\therefore \sqrt{x}-\sqrt{y}=2\sqrt{3}-\sqrt{2}$.

12.

Let $\sqrt{x}-\sqrt{y}=\sqrt{38-12\sqrt{10}}$.

Then $\sqrt{x}+\sqrt{y}=\sqrt{38+12\sqrt{10}}$.

By multiplying,

$x-y=\sqrt{1444-1440}$.

$\therefore x-y=2$.

But $x+y=38$.

$\therefore x=20$,

and $y=18$.

$\therefore \sqrt{x}-\sqrt{y}=2\sqrt{5}-3\sqrt{2}$.

13.

Let $\sqrt{x}-\sqrt{y}=\sqrt{103-12\sqrt{11}}$.

Then $\sqrt{x}+\sqrt{y}=\sqrt{103+12\sqrt{11}}$.

By multiplying,

$x-y=\sqrt{10609-1584}$.

$\therefore x-y=95$.

But $x+y=103$.

$\therefore x=99$,

and $y=4$.

$\therefore \sqrt{x}-\sqrt{y}=3\sqrt{11}-2$.

14.

Let $\sqrt{x}-\sqrt{y}=\sqrt{57-12\sqrt{15}}$.

Then $\sqrt{x}+\sqrt{y}=\sqrt{57+12\sqrt{15}}$.

By multiplying,

$x-y=\sqrt{3249-2160}$.

$\therefore x-y=33$.

But $x+y=57$.

$\therefore x=45$,

and $y=12$.

$\therefore \sqrt{x}-\sqrt{y}=3\sqrt{5}-2\sqrt{3}$.

15.

Let $\sqrt{x}-\sqrt{y}=\sqrt{\frac{7}{2}-\sqrt{10}}$.

Then $\sqrt{x}+\sqrt{y}=\sqrt{\frac{7}{2}+\sqrt{10}}$.

By multiplying,

$x-y=\sqrt{\frac{49}{4}-10}$.

$\therefore x-y=\frac{3}{2}$.

But $x+y=\frac{7}{2}$.

$\therefore x=\frac{5}{2}$,

and $y=1$.

$\therefore \sqrt{x}-\sqrt{y}=\frac{1}{2}\sqrt{10}-1$.

16.

Let $\sqrt{x}+\sqrt{y}=\sqrt{2a+2\sqrt{a^2-b^2}}$.

Then $\sqrt{x}-\sqrt{y}=\sqrt{2a-2\sqrt{a^2-b^2}}$.

By multiplying,

$x-y=\sqrt{4a^2-4a^2+4b^2}$.

$\therefore x-y=2b$.

But $x+y=2a$.

$\therefore x=a+b$,

and $y=a-b$.

$\therefore \sqrt{x}+\sqrt{y}=\sqrt{a+b}+\sqrt{a-b}$.

17.

Let $\sqrt{x}-\sqrt{y}=\sqrt{a^2-2b\sqrt{a^2-b^2}}$.

Then $\sqrt{x}+\sqrt{y}=\sqrt{a^2+2b\sqrt{a^2-b^2}}$.

By multiplying,

$$x-y=\sqrt{a^4-4a^2b^2+4b^4}.$$

$$\therefore x-y=a^2-2b^2.$$

But $x+y=a^2$.

$$\therefore x=a^2-b^2,$$

and $y=b^2$.

$$\therefore \sqrt{x}-\sqrt{y}=\sqrt{a^2-b^2}-b.$$

18.

Let $\sqrt{x}-\sqrt{y}=\sqrt{87-12\sqrt{42}}$.

Then $x-y=\sqrt{7569-6048}$.

$$\therefore x-y=39.$$

But $x+y=87$.

$$\therefore x=63,$$

and $y=24$.

$$\therefore \sqrt{x}-\sqrt{y}=\sqrt{63}-\sqrt{24}$$
$$=3\sqrt{7}-2\sqrt{6}.$$

19.

Let $\sqrt{x}-\sqrt{y}=\sqrt{(a+b)^2-4(a-b)\sqrt{ab}}$.

Then $\sqrt{x}+\sqrt{y}=\sqrt{(a+b)^2+4(a-b)\sqrt{ab}}$.

$$\therefore x-y=\sqrt{a^4-12a^3b+38a^2b^2-12ab^3+b^4}$$
$$=a^2-6ab+b^2.$$

But $x+y=a^2+2ab+b^2$.

$$\therefore x=(a-b)^2,$$

and $y=4ab$.

$$\therefore \sqrt{x}-\sqrt{y}=a-b-2\sqrt{ab}.$$

Exercise 93.

1. $\sqrt{-4} + \sqrt{-25} = 2\sqrt{-1} + 5\sqrt{-1} = 7\sqrt{-1}$.

2. $\sqrt{-81} - \sqrt{-36} = 9\sqrt{-1} - 6\sqrt{-1} = 3\sqrt{-1}$.

3. $\sqrt{-144} + \sqrt{-100} = 12\sqrt{-1} + 10\sqrt{-1} = 22\sqrt{-1}$.

4. $\sqrt{-256} - \sqrt{-16} = 16\sqrt{-1} - 4\sqrt{-1} = 12\sqrt{-1}$.

5. $\sqrt{-121} - \sqrt{-49} = 11\sqrt{-1} - 7\sqrt{-1} = 4\sqrt{-1}$.

6. $\sqrt{-a^4} + \sqrt{-4a^2} - \sqrt{-16a^4} = a^2\sqrt{-1} + 2a\sqrt{-1} - 4a^2\sqrt{-1}$
$= (2a - 3a^2)\sqrt{-1}$.

7. $\sqrt{-16a^6} + \sqrt{-49a^2} + \sqrt{-4a^4} = 4a^3\sqrt{-1} + 7a\sqrt{-1} + 2a^2\sqrt{-1}$
$= (4a^3 + 7a + 2a^2)\sqrt{-1}$.

8. $\sqrt{-m} + \sqrt{-n} - \sqrt{-4} = m^{\frac{1}{2}}\sqrt{-1} + n^{\frac{1}{2}}\sqrt{-1} - 2\sqrt{-1}$
$= (m^{\frac{1}{2}} + n^{\frac{1}{2}} - 2)\sqrt{-1}$.

9. $3a\sqrt{-4a^2} + 2a^2\sqrt{-49} = 6a^2\sqrt{-1} + 14a^2\sqrt{-1}$
$= 20a^2\sqrt{-1}$.

10. $\sqrt{18} + \sqrt{-18} - \sqrt{-8} = 3\sqrt{2} + 3\sqrt{-2} - 2\sqrt{-2}$
$= 3\sqrt{2} - \sqrt{-2} = 3\sqrt{2} - 2^{\frac{1}{2}}\sqrt{-1}$.

11. $(1 + \sqrt{-4})(1 - \sqrt{-4}) = (1 + 2\sqrt{-1})(1 - 2\sqrt{-1})$
$= 1 - 2(-1) = 1 + 2 = 3$.

12. $(4 + \sqrt{-3})(4 - \sqrt{-3}) = (4 + 3^{\frac{1}{2}}\sqrt{-1})(4 - 3^{\frac{1}{2}}\sqrt{-1})$
$= 16 - 3(-1) = 16 + 3 = 19$.

13. $(\sqrt{3} - 2\sqrt{-2})(\sqrt{3} + 2\sqrt{-2})$
$= (\sqrt{3} - 2 \times 2^{\frac{1}{2}}\sqrt{-1})(\sqrt{3} + 2 \times 2^{\frac{1}{2}}\sqrt{-1}) = 3 - 4 \times 2 \times (-1)$
$= 3 + 8 = 11$.

14. $(\sqrt{54}-\sqrt{-2})(\sqrt{54}+\sqrt{-2})$

$=(3\sqrt{6}-2^{\frac{1}{2}}\sqrt{-1})(3\sqrt{6}+2^{\frac{1}{2}}\sqrt{-1})=54-2(-1)=54+2=56.$

15. $(\sqrt{-a}+\sqrt{-b})(\sqrt{-a}-\sqrt{-b})$

$=(a^{\frac{1}{2}}\sqrt{-1}+b^{\frac{1}{2}}\sqrt{-1})(a^{\frac{1}{2}}\sqrt{-1}-b^{\frac{1}{2}}\sqrt{-1})=a(-1)-b(-1)$

$=-a+b=b-a.$

16. $(a\sqrt{-a^2b^4})(a\sqrt{-a^4b^5})=(a^2b^2\sqrt{-1})(a^3b^{\frac{5}{2}}\sqrt{-1})=a^5b^{\frac{9}{2}}(-1)$

$=-a^5b^{\frac{9}{2}}=-a^5b^4\sqrt{b}.$

17. $(2\sqrt{3}-\sqrt{-5})(2\sqrt{3}+\sqrt{-5})=(2\sqrt{3}-5^{\frac{1}{2}}\sqrt{-1})(2\sqrt{3}+5^{\frac{1}{2}}\sqrt{-1})$

$=12-5(-1)=12+5=17.$

18. $(\sqrt{-10})(\sqrt{-2})=(10^{\frac{1}{2}}\sqrt{-1})(2^{\frac{1}{2}}\sqrt{-1})=(20)^{\frac{1}{2}}(-1)$

$=4^{\frac{1}{2}}\times 5^{\frac{1}{2}}\times(-1)=2\times 5^{\frac{1}{2}}\times(-1)=-2\sqrt{5}.$

19. $\dfrac{\sqrt{-12}}{\sqrt{-3}}=\dfrac{12^{\frac{1}{2}}\sqrt{-1}}{3^{\frac{1}{2}}\sqrt{-1}}=4^{\frac{1}{2}}=2.$

20 $\dfrac{\sqrt{15}}{\sqrt{-5}}=\dfrac{5^{\frac{1}{2}}\times 3^{\frac{1}{2}}}{5^{\frac{1}{2}}\sqrt{-1}}=\dfrac{3^{\frac{1}{2}}}{\sqrt{-1}}=\dfrac{3^{\frac{1}{2}}\sqrt{-1}}{-1}=-\sqrt{-3}.$

21. $\dfrac{\sqrt{-5}}{\sqrt{-20}}=\dfrac{5^{\frac{1}{2}}\sqrt{-1}}{4^{\frac{1}{2}}\times 5^{\frac{1}{2}}\sqrt{-1}}=\dfrac{1}{4^{\frac{1}{2}}}=\dfrac{1}{2}.$

22. $\dfrac{a}{\sqrt{-a}}=\dfrac{a}{a^{\frac{1}{2}}\sqrt{-1}}=\dfrac{a\sqrt{-1}}{-a^{\frac{1}{2}}}=-a^{\frac{1}{2}}\sqrt{-1}=-\sqrt{-a}.$

23. $\dfrac{-\sqrt{25}}{\sqrt{-5}}=\dfrac{-5}{5^{\frac{1}{2}}\sqrt{-1}}=\dfrac{-5\sqrt{-1}}{-5^{\frac{1}{2}}}=5^{\frac{1}{2}}\sqrt{-1}=\sqrt{-5}.$

24. $\dfrac{-\sqrt{-25}}{-\sqrt{-5}}=\dfrac{5\sqrt{-1}}{5^{\frac{1}{2}}\sqrt{-1}}=5^{\frac{1}{2}}=\sqrt{5}.$

25. $\dfrac{4\sqrt{-20}}{-2\sqrt{-25}}=\dfrac{8\sqrt{-5}}{-10\sqrt{-1}}=\dfrac{8\times 5^{\frac{1}{2}}\sqrt{-1}}{-10\sqrt{-1}}=\dfrac{8\sqrt{5}}{10}=\dfrac{4}{5}\sqrt{5}.$

26. $\dfrac{4+\sqrt{-2}}{2-\sqrt{-2}}=\dfrac{(4+\sqrt{-2})(2+\sqrt{-2})}{(2-\sqrt{-2})(2+\sqrt{-2})}=\dfrac{6+6\sqrt{-2}}{6}=1+\sqrt{-2}.$

Exercise 94.

1. $x^2 - 3 = 46,$
$x^2 = 49.$
$\therefore x = \pm 7.$

2. $2(x^2-1)-3(x^2+1)+14 = 0.$
Simplify,
$2x^2-2-3x^2-3+14 = 0,$
$x^2 = 9.$
$\therefore x = \pm 3.$

3. $\frac{x^2-5}{3} + \frac{2x^2+1}{6} = \frac{1}{2}.$
Simplify,
$2x^2 - 10 + 2x^2 + 1 = 3,$
$4x^2 = 12,$
$x^2 = 3.$
$\therefore x = \pm\sqrt{3}.$

4. $\frac{3}{1+x} + \frac{3}{1-x} = 8.$
Simplify,
$3 - 3x + 3 + 3x = 8 - 8x^2,$
$8x^2 = 2,$
$x^2 = \frac{1}{4}.$
$\therefore x = \pm \frac{1}{2}.$

5. $\frac{3}{4x^2} - \frac{1}{6x^2} = \frac{7}{3}$
Simplify, $9 - 2 = 28x^2,$
$-28x^2 = -7,$
$x^2 = \frac{1}{4}.$
$\therefore x = \pm \frac{1}{2}.$

6. $5x^2 - 9 = 2x^2 + 24,$
$3x^2 = 33,$
$x^2 = 11.$
$\therefore x = \pm\sqrt{11}.$

7. $(x+2)^2 = 4x + 5.$
Simplify,
$x^2 + 4x + 4 = 4x + 5.$
Transpose and combine,
$x^2 = 1.$
$\therefore x = \pm 1.$

8. $\frac{x^2}{5} - \frac{x^2-10}{15} = 7 - \frac{50+x^2}{25}.$
Simplify,
$15x^2 - 5x^2 + 50 = 525 - 150 - 3x^2.$
Transpose and combine,
$13x^2 = 325,$
$x^2 = 25.$
$\therefore x = \pm 5.$

9. $\frac{3x^2-27}{x^2+3} + \frac{90+4x^2}{x^2+9} = 7.$
Simplify, $(3x^2-27)(x^2+9) + (90+4x^2)(x^2+3) = 7(x^2+3)(x^2+9).$
$3x^4 - 243 + 4x^4 + 102x^2 + 270 = 7x^4 + 84x^2 + 189,$
$18x^2 = 162,$
$x^2 = 9.$
$\therefore x = \pm 3.$

10. $8x + \frac{7}{x} = \frac{65x}{7}.$
Simplify, $56x^2 + 49 = 65x^2.$
Transpose and combine,
$-9x^2 = -49,$
$x^2 = \frac{49}{9}.$
$\therefore x = \pm \frac{7}{3}$
$= \pm 2\frac{1}{3}.$

11. $\frac{4x^2+5}{10} - \frac{2x^2-5}{15} = \frac{7x^2-25}{20}.$
Simplify,
$24x^2 + 30 - 8x^2 + 20 = 21x^2 - 75,$
$24x^2 - 8x^2 - 21x^2 = -75 - 30 - 20,$
$-5x^2 = -125,$
$x^2 = 25.$
$\therefore x = \pm 5.$

12.

$$\frac{10x^2+17}{18}-\frac{12x^2+2}{11x^2-8}=\frac{5x^2-4}{9}.$$

Simplify, $110x^4+107x^2-136-216x^2-36=110x^4-168x^2+64.$

Transpose and combine, $59x^2=236,$

$x^2=4.$

$\therefore x=\pm 2.$

13.

$$\frac{14x^2+16}{21}-\frac{2x^2+8}{8x^2-11}=\frac{2x^2}{3}.$$

Simplify, $112x^4-26x^2-176-42x^2-168=112x^4-154x^2.$

Transpose and combine, $86x^2=344,$

$x^2=4.$

$\therefore x=\pm 2.$

14. $x^2+bx+a=bx(1-bx),$

$x^2+bx+a=bx-b^2x^2,$

$x^2+b^2x^2=-a,$

$x^2=-\frac{a}{1+b^2}.$

$\therefore x=\pm\sqrt{-\frac{a}{1+b^2}}.$

15. $mx^2+n=q,$

$mx^2=q-n.$

$\therefore x=\pm\sqrt{\frac{q-n}{m}}.$

16. $x^2-ax+b=ax(x-1),$

$x^2-ax+b=ax^2-ax,$

$x^2-ax^2=-b,$

$x^2(1-a)=-b,$

$x^2=\frac{b}{a-1}.$

$\therefore x=\pm\sqrt{\frac{b}{a-1}}.$

Exercise 95.

1. $x^2+4x=12,$

Complete the square, $x^2+4x+4=16.$

Extract the root, $x+2=\pm 4.$

$\therefore x=2$ or $-6.$

2. $x^2-6x=16.$

Complete the square, $x^2-6x+9=25.$

Extract the root, $x-3=\pm 5.$

$\therefore x=8$ or $-2.$

3. $x^2 - 12x + 6 = \frac{1}{4}$.

$x^2 - 12x = -\frac{23}{4}$.

Complete the square,

$x^2 - 12x + 36 = 11\frac{1}{4}$.

Extract the root,

$x - 6 = \pm 11\frac{1}{2}$.

$\therefore x = 11\frac{1}{2}$ or $\frac{1}{2}$.

4. $x^2 - 7x = 8$.

Multiply by 4,

$4x^2 - 28x = 32$.

Complete the square,

$4x^2 - (\ ) + 49 = 81$.

Extract the root,

$2x - 7 = \pm 9$,

$2x = 7 \pm 9$.

$\therefore x = 8$ or -1.

5. $3x^2 - 4x = 7$.

Multiply by 3,

$9x^2 - 12x = 21$.

Complete the square,

$9x^2 - 12x + 4 = 25$.

Extract the root,

$3x - 2 = \pm 5$,

$3x = 7$ or -3.

$\therefore x = 2\frac{1}{3}$ or -1.

6. $12x^2 + x - 1 = 0$.

$12x^2 + x = 1$.

Multiply by 3,

$36x^2 + 3x = 3$.

Complete the square,

$36x^2 + (\ ) + \frac{1}{16} = \frac{49}{16}$.

Extract the root,

$6x + \frac{1}{4} = \pm \frac{7}{4}$,

$6x = \frac{6}{4}$ or -2.

$\therefore x = \frac{1}{4}$ or $-\frac{1}{3}$.

7. $x^2 - x = 6$.

Complete the square,

$x^2 - x + \frac{1}{4} = \frac{25}{4}$.

Extract the root,

$x - \frac{1}{2} = \pm \frac{5}{2}$,

$x = \frac{1 \pm 5}{2}$.

$\therefore x = 3$ or -2.

8. $5x^2 - 3x = 2$.

Multiply by 5,

$25x^2 - 15x = 10$.

Complete the square,

$25x^2 - (\ ) + \frac{9}{4} = \frac{49}{4}$.

Extract the root,

$5x - \frac{3}{2} = \pm \frac{7}{2}$,

$5x = \frac{3 \pm 7}{2}$.

$\therefore x = 1$ or $-\frac{2}{5}$.

9. $2x^2 - 27x = 14$.

Multiply by 8,

$16x^2 - 216x = 112$.

Complete the square,

$16x^2 - (\ ) + 729 = 841$.

Extract the root,

$4x - 27 = \pm 29$,

$4x = 56$ or -2.

$\therefore x = 14$ or $-\frac{1}{2}$.

10. $x^2 - \frac{2x}{3} + \frac{1}{12} = 0.$

$$x^2 - \frac{2x}{3} = -\frac{1}{12}.$$

Complete the square,

$$x^2 - \frac{2x}{3} + \frac{1}{9} = \frac{1}{36}.$$

Extract the root,

$$x - \frac{1}{3} = \pm\frac{1}{6},$$

$$x = \frac{1}{3} \pm \frac{1}{6}$$

$$\therefore x = \frac{1}{2} \text{ or } \frac{1}{6}.$$

11. $\frac{x^2}{2} - \frac{x}{3} = 2(x+2).$

Simplify, $3x^2 - 2x = 12x + 24,$

$$3x^2 - 14x = 24.$$

Multiply by 3,

$$9x^2 - 42x = 72.$$

Complete the square,

$$9x^2 - (\,) + 49 = 121.$$

Extract the root,

$$3x - 7 = \pm 11,$$

$$3x = 18 \text{ or } -4.$$

$$\therefore x = 6 \text{ or } -1\tfrac{1}{3}.$$

12. $\frac{3x}{4} + \frac{4}{3x} = \frac{13}{6}.$

Simplify,

$$9x^2 - 26x = -16.$$

Complete the square,

$$9x^2 - 26x + \frac{169}{9} = \frac{25}{9}.$$

Extract the root,

$$3x - \frac{13}{3} = \pm\frac{5}{3},$$

$$3x = 6 \text{ or } \frac{8}{3}.$$

$$\therefore x = 2 \text{ or } \frac{8}{9}.$$

13. $\frac{x+1}{x+4} = \frac{2x-1}{x+6}.$

Simplify,

$$(x+1)(x+6) = (2x-1)(x+4),$$

$$x^2 + 7x + 6 = 2x^2 + 7x - 4,$$

$$x^2 - 2x^2 + 7x - 7x = -4 - 6,$$

$$-x^2 = -10,$$

$$x^2 = 10.$$

$$\therefore x = \pm\sqrt{10}.$$

14. $\frac{x}{x+1} - \frac{x+3}{2(x+4)} = -\frac{1}{18}.$

Simplify, $18x^2 + 72x - 9x^2 - 36x - 27 = -x^2 - 5x - 4.$

Transpose and combine, $10x^2 + 41x = 23.$

Multiply by 10, $100x^2 + 410x = 230.$

Complete the square, $100x^2 + (\,) + \frac{1681}{4} = \frac{2601}{4}.$

Extract the root,

$$10x + \frac{41}{2} = \pm\frac{51}{2},$$

$$10x = -\frac{41}{2} \pm \frac{51}{2}$$

$$\therefore x = \tfrac{1}{2} \text{ or } -4\tfrac{1}{5}.$$

15. $$\frac{2}{x-1}=\frac{3}{x-2}+\frac{2}{x-4}.$$

Simplify, $2x^2-12x+16=3x^2-15x+12+2x^2-6x+4.$

Transpose and combine, $-3x^2+9x=0.$

Divide by -3, $x^2-3x=0,$

or $x(x-3)=0.$

$\therefore x=3$ or $0.$

16.

$$5x(x-3)-2(x^2-6)=(x+3)(x+4).$$

Simplify, $5x^2-15x-2x^2+12=x^2+7x+12.$

Transpose and combine, $2x^2-22x=0,$

$x^2-11x=0,$

or $x(x-11)=0.$

$\therefore x=11$ or $0.$

17.

$$\frac{3x}{2(x+1)}-\frac{5}{8}=\frac{3x^2}{x^2-1}-\frac{23}{4(x-1)}.$$

Simplify, $12x^2-12x-5x^2+5=24x^2-46x-46.$

Transpose and combine, $17x^2-34x=51,$

Divide by 17, $x^2-2x=3.$

Complete the square, $x^2-(\ )+1=4.$

Extract the root, $x-1=\pm 2.$

$\therefore x=3$ or $-1.$

18.

$$(x-2)(x-4)-2(x-1)(x-3)=0.$$

Simplify, $x^2-6x+8-2x^2+8x-6=0.$

Transpose and combine, $x^2-2x=2.$

Complete the square, $x^2-2x+1=3.$

Extract the root, $x-1=\pm\sqrt{3}.$

$\therefore x=1\pm\sqrt{3}.$

19.

$$\frac{1}{7}(x-4)-\frac{2}{5}(x-2)=\frac{1}{x}(2x+3).$$

Simplify, $5x^2-20x-14x^2+28x=70x+105.$

Transpose and combine, $9x^2+62x=-105.$

Complete the square, $324x^2+(\ )+(62)^2=64.$

Extract the root, $18x+62=\pm 8,$

$18x=-54$ or $-70.$

$\therefore x=-3$ or $-3\frac{7}{9}.$

20.

$$\frac{2}{5}(3x^2-x-5)-\frac{1}{3}(x^2-1)=2(x-2)^2.$$

Simplify, $18x^2-6x-30-5x^2+5=30x^2-120x+120,$

$$17x^2-114x=-145.$$

Multiply by 17, $$289x^2-1938x=-2465.$$

Complete the square, $289x^2-(\ )+3249=784.$

Extract the root, $$17x-57=\pm 28.$$

$$\therefore x=5 \text{ or } 1\tfrac{13}{17}.$$

21.

$$\frac{2x}{15}+\frac{3x-50}{3(10+x)}=\frac{12x+70}{190}.$$

Simplify, $760x+78x^2+510x-9500=38x^2+510x+2100,$

$$40x^2+760x=11600.$$

Divide by 10, $$4x^2+76x=1160.$$

Complete the square, $4x^2+(\ )+361=1521.$

Extract the root, $$2x+19=\pm 39.$$

$$\therefore x=10 \text{ or } -29.$$

22.

$$\frac{x}{x^2-1}=\frac{15-7x}{8(1-x)},$$

or $$\frac{x}{(x+1)(x-1)}=\frac{7x-15}{8(x-1)}.$$

Simplify, $$8x=7x^2-8x-15,$$

$$7x^2-16x=15.$$

Multiply by 7, $$49x^2-112x=105.$$

Complete the square, $49x^2-(\ )+64=169.$

Extract the root, $$7x-8=\pm 13.$$

$$\therefore x=3 \text{ or } -\tfrac{5}{7}.$$

23.

$$\frac{2x-1}{x-1}+\frac{1}{6}=\frac{2x-3}{x-2}.$$

Simplify, $12x^2-30x+12+x^2-3x+2=12x^2-30x+18.$

Transpose and combine, $$x^2-3x=4.$$

Complete the square, $4x^2-(\ )+9=25.$

Extract the root, $$2x-3=\pm 5.$$

$$\therefore x=4 \text{ or } -1.$$

24.

$$\frac{x+2}{x-1}-\frac{4-x}{2x}=\frac{7}{3}.$$

Simplify, $6x^2+12x+3x^2-15x+12=14x^2-14x.$

Transpose and combine, $5x^2-11x=12.$

Multiply by 5, $25x^2-55x=60.$

Complete the square, $25x^2-(\ )+\frac{121}{4}=\frac{361}{4}.$

Extract the root, $5x-\frac{11}{2}=\pm\frac{19}{2},$

$5x=15 \text{ or } -4.$

$\therefore x=3 \text{ or } -\frac{4}{5}.$

25.

$$x-\frac{14x-9}{8x-3}=\frac{x^2-3}{x+1}.$$

Simplify, $8x^3+5x^2-3x-14x^2-5x+9=8x^3-24x-3x^2+9.$

Transpose and combine, $-6x^2+16x=0.$

Divide by -2, $3x^2-8x=0,$

$x(3x-8)=0.$

$\therefore x=0 \text{ or } 2\frac{2}{3}.$

26.

$$1-\frac{x+5}{2x+1}=\frac{x-6}{x-2}.$$

Simplify, $2x^2-3x-2-x^2-3x+10=2x^2-11x-6.$

Transpose and combine, $x^2-5x=14.$

Complete the square, $x^2-(\ )+\frac{25}{4}=\frac{81}{4}.$

Extract the root, $x-\frac{5}{2}=\pm\frac{9}{2}$

$\therefore x=7 \text{ or } -2.$

27.

$$\frac{x}{7-x}+\frac{7-x}{x}=2\tfrac{9}{10}.$$

Simplify, $10x^2+490-140x+10x^2=203x-29x^2.$

Transpose and combine, $49x^2-343x=-490.$

Divide by 49, $x^2-7x=-10.$

Complete the square, $x^2-(\ )+\frac{49}{4}=\frac{9}{4}$

Extract the root, $x-\frac{7}{2}=\pm\frac{3}{2}$

$\therefore x=5 \text{ or } 2.$

28.

$$\frac{2x+3}{2(2x-1)} - \frac{7-x}{2(x+1)} = \frac{7-3x}{4-3x}.$$

Simplify, $-14x^2 - 12x^3 + 22x + 24 - 12x^3 + 106x^2 - 162x + 56$
$= 44x^2 - 40x - 24x^3 - 28.$

Transpose and combine, $48x^2 - 180x = -108.$

Divide by 12, $4x^2 - 15x = -9.$

Multiply by 16 and complete the square,
$64x^2 - (\ ) + 225 = 81.$

Extract the root, $8x - 15 = \pm 9,$
$8x = 24 \text{ or } 6.$
$\therefore\ x = 3, \text{ or } \tfrac{3}{4}.$

29.

$$\frac{12x^3 - 11x^2 + 10x - 78}{8x^2 - 7x + 6} = 1\tfrac{1}{2}x - \frac{1}{2}.$$

Simplify, $24x^3 - 22x^2 + 20x - 156 = 24x^3 - 21x^2 + 18x - 8x^2 + 7x - 6.$

Transpose and combine, $7x^2 - 5x = 150.$

Multiply by 28, $196x^2 - 140x = 4200.$

Complete the square, $196x^2 - (\ ) + 25 = 4225.$

Extract the root, $14x - 5 = \pm 65.$
$\therefore\ x = 5 \text{ or } -4\tfrac{2}{7}.$

30.

$$\frac{3x-1}{7-x} - \frac{5-4x}{2x+1} = 3.$$

Simplify,
$(2x+1)(3x-1) - (5-4x)(7-x) = 3(7-x)(2x+1).$
$6x^2 + x - 1 - (35 - 33x + 4x^2) = 39x + 21 - 6x^2.$
$6x^2 + x - 1 - 35 + 33x - 4x^2 = 39x + 21 - 6x^2.$

Transpose and combine, $8x^2 - 54 = 57.$

Multiply by 32 and complete the square,
$256x^2 - (\ ) + 25 = 1489.$

Extract the root, $16x - 5 = \pm 43.$
$\therefore\ 16x = 48,$
or $16x = -38,$
and $x = 3,$
or $x = -2\tfrac{3}{8}.$

Exercise 96.

1. $x^2 + 2ax = a^2$.

Complete the square,

$x^2 + 2ax + a^2 = 2a^2$.

Extract the root,

$x + a = \pm a\sqrt{2}$.

$\therefore x = -a \pm a\sqrt{2}$.

2. $x^2 = 4ax + 7a^2$.

Transpose,

$x^2 - 4ax = 7a^2$.

Complete the square,

$x^2 - 4ax + 4a^2 = 11a^2$.

Extract the root,

$x - 2a = \pm a\sqrt{11}$.

$\therefore x = 2a \pm a\sqrt{11}$.

3. $x^2 = \frac{7m^2}{4} - 3mx$.

$4x^2 = 7m^2 - 12mx$,

$4x^2 + 12mx = 7m^2$,

$4x^2 + (\ ) + (3m)^2 = 16m^2$,

$2x + 3m = \pm 4m$,

$2x = \pm 4m - 3m$.

$\therefore x = \frac{m}{2}$ or $-\frac{7m}{2}$.

4. $x^2 - \frac{5nx}{2} - \frac{3n^2}{2} = 0$.

$2x^2 - 5nx - 3n^2 = 0$,

$4x^2 - 10nx = 6n^2$,

$4x^2 - (\ ) + \frac{25n^2}{4} = \frac{49n^2}{4}$,

$2x - \frac{5n}{2} = \pm\frac{7n}{2}$,

$2x = 6n$ or $-n$.

$\therefore x = 3n$ or $-\frac{n}{2}$.

5. $\frac{a^2}{(x+a)^2} = \frac{b^2}{(x-a)^2}$.

$a^2(x-a)^2 = b^2(x+a)^2$,

$a(x-a) = \pm b(x+a)$,

$ax - a^2 = bx + ab$,

$x(a-b) = a^2 + ab$.

$\therefore x = \frac{a(a+b)}{a-b}$;

or $ax - a^2 = -bx - ab$,

$x(a+b) = a^2 - ab$.

$\therefore x = \frac{a(a-b)}{a+b}$

6. $cx = ax^2 + bx^2 - \frac{ac}{a+b}$.

$acx + bcx = a^2x^2 + 2abx^2 + b^2x^2 - ac$,

$a^2x^2 + 2abx^2 + b^2x^2 - acx - bcx = ac$,

$x^2(a^2 + 2ab + b^2) - x(ac + bc) = ac$,

$x^2(a^2 + 2ab + b^2) - (\ ) + \frac{c^2}{4} = \frac{4ac + c^2}{4}$,

$x(a+b) - \frac{c}{2} = \pm\frac{\sqrt{4ac + c^2}}{2}$,

$x(a+b) = \frac{c \pm \sqrt{4ac + c^2}}{2}$.

$\therefore x = \frac{c \pm \sqrt{4ac + c^2}}{2(a+b)}$.

7.

$$\frac{a^2x^2}{b^2}+\frac{b^2}{c^2}=\frac{2ax}{c}.$$

$$a^2c^2x^2+b^4=2ab^2cx,$$
$$a^2c^2x^2-2ab^2cx=-b^4,$$
$$a^2c^2x^2-(\ )+b^4=0,$$
$$acx-b^2=0,$$
$$acx=b^2,$$
$$\therefore x=\frac{b^2}{ac}.$$

8

$$(a^2+1)x=ax^2+a.$$
$$a^2x+x=ax^2+a,$$
$$ax^2-(a^2+1)x=-a,$$
$$4a^2x^2-(\ )+(a^2+1)^2=a^4-2a^2+1,$$
$$2ax-(a^2+1)=\pm(a^2-1),$$
$$2ax=(a^2+1)\pm(a^2-1).$$
$$\therefore x=a \text{ or } \frac{1}{a}.$$

9.

$$\frac{a}{x-a}+\frac{b}{x-b}=\frac{2c}{x-c}.$$

$$a(x-b)(x-c)+b(x-a)(x-c)=2c(x-a)(x-b),$$
$$ax^2-abx-acx+abc+bx^2-abx-bcx+abc=2cx^2-2acx-2bcx+2abc,$$
$$x^2(a+b-2c)+x(ac+bc-2ab)=0.$$
$$\therefore x=0 \text{ or } \frac{2ab-ac-bc}{a+b-2c}.$$

10.

$$\frac{1}{a+b+x}=\frac{1}{a}+\frac{1}{b}+\frac{1}{x}.$$

$$abx=abx+b^2x+bx^2+a^2x+abx+ax^2+a^2b+ab^2+abx,$$
$$x^2(a+b)+x(a+b)^2=-ab(a+b).$$

Divide by $(a+b)$, $x^2+(a+b)x=-ab,$

$$4x^2+(\ )+(a+b)^2=a^2-2ab+b^2,$$
$$2x+(a+b)=\pm(a-b),$$
$$2x=-2b \text{ or } -2a.$$
$$\therefore x=-b \text{ or } -a.$$

11.

$$\frac{1}{a-x}-\frac{1}{a+x}=\frac{3+x^2}{a^2-x^2}.$$

$$a+x-a+x=3+x^2,$$
$$x^2-2x=-3,$$
$$x^2-2x+1=-2,$$
$$x-1=\pm\sqrt{-2}.$$
$$\therefore x=1\pm\sqrt{-2}.$$

12.

$$\frac{x^2+2ab(a^2+b^2)}{a^2+b^2}=2x.$$

$$x^2+2ab(a^2+b^2)=2x(a^2+b^2),$$
$$x^2-2x(a^2+b^2)=-2a^2b-2ab^2,$$
$$x^2-(\ )+(a^2+b^2)^2=a^4-2a^3b+2a^2b^2-2ab^3+b^4,$$
$$x^2-(\ )+(a^2+b^2)^2=(a^2+b^2)(a-b)^2,$$
$$x-(a^2+b^2)=\pm(a-b)\sqrt{a^2+b^2}.$$
$$\therefore x=a^2+b^2\pm(a-b)\sqrt{a^2+b^2}.$$

13. $\dfrac{(2x-a)^2}{2x-a+2b}=b.$

$4x^2-4ax+a^2=2bx-ab+2b^2,$

$4x^2-2x(2a+b)=-a^2-ab+2b^2,$

$16x^2-(\ )+(2a+b)^2=9b^2,$

$4x-(2a+b)=\pm 3b,$

$4x=2a-2b,$

or $2a+4b.$

$\therefore x=\dfrac{a-b}{2}$ or $\dfrac{a+2b}{2}.$

14. $x^2+ax=a+x.$

$x^2+ax-x=a,$

$x^2+(a-1)x=a,$

$4x^2+(\ )+(a-1)^2=a^2+2a+1,$

$2x+(a-1)=\pm(a+1),$

$2x=-(a-1)\pm(a+1).$

$\therefore x=1$ or $-a.$

15. $x^2+ax=bx+ab.$

$x^2+(a-b)x=ab,$

$4x^2+(\ )+(a-b)^2=(a+b)^2,$

$2x+(a-b)=\pm(a+b),$

$2x=-2a$ or $2b.$

$\therefore x=-a$ or $b.$

16. $\dfrac{x}{a}+\dfrac{a}{x}=\dfrac{x}{b}+\dfrac{b}{x}.$

$x^2b+a^2b=ax^2+ab^2,$

$x^2b-x^2a=ab^2-a^2b,$

$x^2(b-a)=ab(b-a).$

Divide by $(b-a),$

$x^2=ab.$

$\therefore x=\pm\sqrt{ab}.$

17.

$$\frac{1}{x}+\frac{1}{x+b}=\frac{1}{a}+\frac{1}{a+b}.$$

$a^2x+a^2b+abx+ab^2+a^2x+abx=ax^2+abx+bx^2+b^2x+ax^2+abx,$

$2ax^2+bx^2-2a^2x+b^2x=a^2b+ab^2,$

$(2a+b)x^2-(2a^2-b^2)x=a^2b+ab^2,$

$4x^2(2a+b)^2-(\ )+(2a^2-b^2)^2=4a^4+8a^3b+8a^2b^2+4ab^3+b^4,$

$2x(2a+b)-(2a^2-b^2)=\pm(2a^2+2ab+b^2),$

$2x(2a+b)=(4a^2+2ab)$ or $-(2ab+2b^2).$

$\therefore x=a$ or $-\dfrac{b(a+b)}{2a+b}.$

18. $\dfrac{a}{3}+\dfrac{5x}{4}-\dfrac{x^2}{3a}=0.$

$4a^2+15ax-4x^2=0,$

$4x^2-15ax=4a^2,$

$64x^2-(\ )+225a^2=289a^2,$

$8x-15a=\pm 17a,$

$8x=32a$ or $-2a.$

$\therefore x=4a$ or $-\dfrac{a}{4}.$

19. $\dfrac{x+3}{x-3}=a+\dfrac{x-3}{x+3}.$

$\dfrac{x+3}{x-3}-\dfrac{x-3}{x+3}=a,$

$x^2+6x+9-x^2$

$+6x-9=ax^2-9a,$

$ax^2-12x=9a,$

$a^2x^2-12ax=9a^2,$

$a^2x^2-(\ )+36=9a^2+36,$

$ax-6=\pm\sqrt{9(a^2+4)},$

$ax=6\pm 3\sqrt{a^2+4}.$

$\therefore x=\dfrac{6\pm 3\sqrt{a^2+4}}{a}.$

20.

$$mx^2 - 1 = \frac{x(m^3 - n^2)}{mn}.$$

$$m^2nx^2 - mn = x(m^3 - n^2),$$

$$m^2nx^2 - (m^3 - n^2)x = mn,$$

$$4m^4n^2x^2 - (\ ) + (m^3 - n^2)^2 = m^6 + 2m^3n^2 + n^4,$$

$$2m^2nx - (m^3 - n^2) = \pm(m^3 + n^2),$$

$$2m^2nx = 2m^3 \text{ or } -2n^2.$$

$$\therefore x = \frac{m}{n} \text{ or } -\frac{n}{m^2}.$$

21.

$$(ax - b)(bx - a) = c^2,$$

$$abx^2 - b^2x - a^2x + ab = c^2,$$

$$abx^2 - (a^2 + b^2)x = c^2 - ab,$$

$$4a^2b^2x^2 - 4ab(a^2 + b^2)x = 4abc^2 - 4a^2b^2,$$

$$4a^2b^2x^2 - (\ ) + (a^2 + b^2)^2 = (a^2 - b^2)^2 + 4abc^2,$$

$$2abx - (a^2 + b^2) = \pm\sqrt{(a^2 - b^2)^2 + 4abc^2}.$$

$$\therefore x = \frac{a^2 + b^2 \pm \sqrt{(a^2 - b^2)^2 + 4abc^2}}{2ab}.$$

22. $\dfrac{ax + b}{bx + a} = \dfrac{mx + n}{nx + m}.$

$$anx^2 + bnx + amx + bm = bmx^2 + bnx + amx + an,$$

$$anx^2 - bmx^2 = an - bm,$$

$$x^2(an - bm) = an - bm,$$

$$x^2 = 1.$$

$$\therefore x = \pm 1.$$

23. $\dfrac{m}{m + x} + \dfrac{m}{m - x} = c.$

$$m^2 - mx + m^2 + mx = cm^2 - cx^2,$$

$$cx^2 = cm^2 - 2m^2,$$

$$x\sqrt{c} = \pm m\sqrt{c - 2}.$$

$$\therefore x = \pm m\sqrt{\frac{c-2}{c}}.$$

24.

$$\frac{(a-1)^2x^2 + 2(3a-1)x}{4a-1} = 1.$$

$$(a-1)^2x^2 + 2(3a-1)x = 4a - 1,$$

$$4(a-1)^4x^2 + (\ ) + (6a-2)^2 = 16a^3,$$

$$2(a-1)^2x + (6a-2) = \pm 4a\sqrt{a},$$

$$2(a-1)^2x = 2 - 6a \pm 4a\sqrt{a}.$$

$$\therefore x = \frac{1 - 3a \pm 2a\sqrt{a}}{(a-1)^2}.$$

25.

$$\frac{(a^2-b^2)(x^2+1)}{a^2+b^2} = 2x.$$

$$a^2x^2 - b^2x^2 + a^2 - b^2 = 2a^2x + 2b^2x,$$
$$a^2x^2 - b^2x^2 - 2a^2x - 2b^2x = b^2 - a^2,$$
$$x^2(a^2-b^2) - 2x(a^2+b^2) = b^2 - a^2,$$
$$x^2(a^2-b^2)^2 - 2x(a^4-b^4) = -a^4 + 2a^2b^2 - b^4,$$
$$x^2(a^2-b^2)^2 - (\ ) + (a^2+b^2)^2 = 4a^2b^2,$$
$$x(a^2-b^2) - (a^2+b^2) = \pm 2ab,$$
$$x(a^2-b^2) = a^2 + b^2 \pm 2ab$$
$$= (a \pm b)^2.$$
$$\therefore x = \frac{a+b}{a-b} \text{ or } \frac{a-b}{a+b}.$$

26.

$$\frac{x^2 - 4mnx}{(m+n)^2} = (m-n)^2.$$

$$x^2 - 4mnx = m^4 - 2m^2n^2 + n^4,$$
$$x^2 - (\ ) + 4m^2n^2 = m^4 + 2m^2n^2 + n^4,$$
$$x - 2mn = \pm (m^2+n^2),$$
$$x = 2mn \pm (m^2+n^2)$$
$$= (m+n)^2 \text{ or } -(m-n)^2.$$

27.

$$x^2 + \frac{a-b}{ab^2} = \frac{14a^2 - 5ab - 10b^2}{18a^2b^2} + \frac{(2a-3b)x}{2ab}$$

$$18a^2b^2x^2 - (18a^2b - 27ab^2)x = -4a^2 + 13ab - 10b^2,$$
$$144a^2b^2x^2 - (144a^2b - 216ab^2)x = -32a^2 + 104ab - 80b^2,$$
$$144a^2b^2x^2 - (\ ) + (6a - 9b)^2 = 4a^2 - 4ab + b^2,$$
$$12abx - (6a - 9b) = \pm (2a - b),$$
$$12abx = 8a - 10b \text{ or } 4a - 8b.$$
$$\therefore x = \frac{4a-5b}{6ab} \text{ or } \frac{a-2b}{3ab}.$$

28.

$$abx^2 + \frac{b^2x}{c} = \frac{6a^2 + ab - 2b^2}{c^2} - \frac{3a^2x}{c}.$$

$$abc^2x^2 + b^2cx = 6a^2 + ab - 2b^2 - 3a^2cx,$$
$$abc^2x^2 + (3a^2c + b^2c)x = 6a^2 + ab - 2b^2,$$
$$4a^2b^2c^2x^2 + 4abcx(3a^2 + b^2) = 24a^3b + 4a^2b^2 - 8ab^3,$$
$$4a^2b^2c^2x^2 + (\ ) + (3a^2 + b^2)^2 = 9a^4 + 24a^3b + 10a^2b^2 - 8ab^3 + b^4,$$
$$2abcx + 3a^2 + b^2 = \pm (3a^2 + 4ab - b^2).$$
$$\therefore x = \frac{2a-b}{ac} \text{ or } -\frac{3a+2b}{bc}.$$

29.

$$\frac{x^2}{3m-2a}-\frac{m^2-4a^2}{4a-6m}=\frac{x}{2}$$

$$\frac{2x^2}{3m-2a}-\frac{4a^2-m^2}{3m-2a}=x,$$

$$2x^2-4a^2+m^2=3mx-2ax,$$

$$2x^2+(2a-3m)x=4a^2-m^2,$$

$$16x^2+(\ )+(2a-3m)^2=(36a^2-12am+m^2),$$

$$4x+(2a-3m)=\pm(6a-m),$$

$$4x=-8a+4m \text{ or } 4a+2m.$$

$$\therefore\ x=m-2a \text{ or } a+\frac{m}{2}.$$

30.

$$6x+\frac{(a+b)^2}{x}=5(a-b)+\frac{25ab}{6x}$$

$$36x^2+6(a+b)^2=30x(a-b)+25ab,$$

$$36x^2-30x(a-b)=25ab-6(a+b)^2,$$

$$36x^2-(\ )+\frac{25}{4}(a-b)^2=\frac{a^2+2ab+b^2}{4},$$

$$6x-\frac{5}{2}(a-b)=\pm\frac{a+b}{2},$$

$$6x=\frac{6a-4b}{2} \text{ or } \frac{4a-6b}{2}.$$

$$\therefore\ x=\frac{3a-2b}{6} \text{ and } \frac{2a-3b}{6}.$$

31.

$$\tfrac{2}{3}(x^2+a^2+ab)=\tfrac{1}{3}x(20a+4b).$$

$$8x^2+8a^2+8ab=20ax+4bx,$$

$$8x^2-(20a+4b)x=-8a^2-8ab,$$

$$16x^2-2(20a+4b)x=-16a^2-16ab,$$

$$16x^2-(\ )+(5a+b)^2=9a^2-6ab+b^2,$$

$$4x-(5a+b)=\pm(3a-b),$$

$$4x=(5a+b)\pm(3a-b).$$

$$\therefore\ x=2a \text{ or } \frac{a+b}{2}.$$

32.

$$x^2-(b-a)c=ax-bx+cx.$$

$$x^2+bx-ax-cx=(b-a)c,$$

$$x^2+(b-a-c)x=(b-a)c,$$

$$4x^2+(\ )+(b-a-c)^2=a^2+b^2+c^2-2ab-2ac+2bc,$$

$$2x+(b-a-c)=\pm(a-b-c),$$

$$2x=2a-2b \text{ or } 2c.$$

$$\therefore\ x=a-b \text{ or } c.$$

33.

$$x^2 - 2mx = (n-p+m)(n-p-m).$$
$$x^2 - 2mx = n^2 - 2np + p^2 - m^2,$$
$$x^2 - (\ ) + m^2 = n^2 - 2np + p^2,$$
$$x - m = \pm(n-p).$$
$$\therefore x = m \pm (n-p).$$

34.

$$x^2 - (m+n)x = \tfrac{1}{4}(p+q+m+n)(p+q-m-n).$$
$$4x^2 - 4(m+n)x = (p+q+m+n)(p+q-m-n),$$
$$4x^2 - (\ ) + (m+n)^2 = p^2 + 2pq + q^2,$$
$$2x - (m+n) = \pm(p+q),$$
$$2x = m + n \pm (p+q).$$
$$\therefore x = \frac{m+n \pm (p+q)}{2}.$$

35.

$$mnx^2 - (m+n)(mn+1)x + (m+n)^2 = 0.$$
$$mnx^2 - (m^2n + mn^2 + m + n)x = -m^2 - 2mn - n^2,$$
$$4m^2n^2x^2 - 4mn(m^2n + mn^2 + m + n)x = -4m^3n - 8m^2n^2 - 4mn^3,$$
$$4m^2n^2x^2 - (\ ) + (m^2n + mn^2 + m + n)^2 = m^4n^2 + 2m^3n^3 - 2m^3n - 4m^2n^2 + m^2n^4 - 2mn^3 + m^2 + 2mn + n^2,$$
$$2mnx - (m^2n + mn^2 + m + n) = \pm(m^2n + mn^2 - m - n),$$
$$2mnx = 2m^2n + 2mn^2 \text{ or } 2m + 2n.$$
$$\therefore x = m + n \text{ or } \frac{m+n}{mn}.$$

36.

$$\frac{2b - x - 2a}{bx} + \frac{4b - 7a}{ax - bx} = \frac{x - 4a}{ab - b^2}.$$
$$4ab - ax - 2a^2 - 2b^2 + bx + 4b^2 - 7ab = x^2 - 4ax,$$
$$x^2 - 3ax - bx = 2b^2 - 3ab - 2a^2,$$
$$x^2 - (3a+b)x = 2b^2 - 3ab - 2a^2,$$
$$4x^2 - 4(3a+b)x = 8b^2 - 12ab - 8a^2,$$
$$4x^2 - (\ ) + (3a+b)^2 = a^2 - 6ab + 9b^2,$$
$$2x - (3a+b) = \pm(a - 3b),$$
$$2x = 4a - 2b \text{ or } 2a + 4b.$$
$$\therefore x = 2a - b \text{ or } a + 2b.$$

37.

$$2x^2(a^2-b^2)-(3a^2+b^2)(x-1)=(3b^2+a^2)(x+1).$$

$$2x^2(a^2-b^2)-3a^2x-b^2x+3a^2+b^2=3b^2x+a^2x+3b^2+a^2,$$

$$2x^2(a^2-b^2)-4a^2x-4b^2x=2b^2-2a^2.$$

Divide by 2, $x^2(a^2-b^2)-2(a^2+b^2)x=b^2-a^2,$

$$x^2(a^2-b^2)^2-2(a^4-b^4)x=(b^2-a^2)(a^2-b^2),$$

$$x^2(a^2-b^2)^2-(\ )+(a^2+b^2)^2=4a^2b^2,$$

$$x(a^2-b^2)-(a^2+b^2)=\pm 2ab,$$

$$x(a^2-b^2)=(a+b)^2 \text{ or } (a-b)^2.$$

$$\therefore x=\frac{a+b}{a-b} \text{ or } \frac{a-b}{a+b}.$$

38.

$$\frac{a-2b-x}{a^2-4b^2}-\frac{5b-x}{ax+2bx}+\frac{2a-x-19b}{2bx-ax}=0.$$

$$\frac{a-2b-x}{(a-2b)(a+2b)}-\frac{5b-x}{(a+2b)x}-\frac{2a-x-19b}{(a-2b)x}=0,$$

$$ax-2bx-x^2-5ab+ax+10b^2-2bx-2a^2$$
$$+ax+15ab+2bx+38b^2=0,$$

$$3ax-2bx-x^2+10ab+48b^2-2a^2=0.$$

$$x^2-(3a-2b)x=-2a^2+10ab+48b^2,$$

$$4x^2-(\ )+(3a-2b)^2=a^2+28ab+196b^2,$$

$$2x-(3a-2b)=\pm(a+14b),$$

$$2x=4a+12b \text{ or } 2a-16b.$$

$$\therefore x=2a+6b \text{ or } a-8b.$$

39.

$$\frac{x+13a+3b}{5a-3b-x}-1=\frac{a-2b}{x+2b}$$

$$x^2+13ax+5bx+26ab+6b^2$$
$$-5ax+5bx+x^2+6b^2-10ab=5a^2-13ab-ax+6b^2+2bx,$$

$$2x^2+(9a+8b)x=5a^2-29ab-6b^2,$$

$$16x^2+8(9a+8b)x=40a^2-232ab-48b^2,$$

$$16x^2+(\ )+(9a+8b)^2=121a^2-88ab+16b^2,$$

$$4x+(9a+8b)=\pm(11a-4b),$$

$$4x=2a-12b \text{ or } -(20a+4b).$$

$$\therefore x=\frac{a}{2}-3b \text{ or } -(5a+b).$$

40.

$$\frac{x+3b}{8a^2-12ab}-\frac{3b}{9b^2-4a^2}-\frac{a+3b}{(2a+3b)(x-3b)}=0.$$

$$\frac{x+3b}{4a(2a-3b)}+\frac{3b}{(2a-3b)(2a+3b)}-\frac{a+3b}{(2a+3b)(x-3b)}=0,$$

$$(x^2-9b^2)(2a+3b)+12abx-36ab^2-4a(2a^2+3ab-9b^2)=0.$$

$$(2a+3b)^2x^2+12abx=8a^3+12a^2b+18ab^2+27b^3,$$

$$4(2a+3b)^2x^2+(\ )+(12ab)^2=64a^4+192a^3b+432a^2b^2+432ab^3+324b^4,$$

$$2(2a+3b)x+12ab=\pm(8a^2+12ab+18b^2),$$

$$(2a+3b)x=4a^2+9b^2 \text{ or } -(4a^2+12ab+9b^2)$$

$$\therefore x=\frac{4a^2+9b^2}{2a+3b} \text{ or } -(2a+3b).$$

41.

$$nx^2+px-px^2-mx+m-n=0.$$

$$nx^2-px^2+px-mx=n-m,$$

$$x^2(n-p)+x(p-m)=n-m,$$

$$4x^2(n-p)^2+(\ )+(p-m)^2=4n^2-4mn-4pn+4pm+p^2-2pm+m^2,$$

$$2x(n-p)+(p-m)=\pm(2n-p-m),$$

$$2x(n-p)=m-p+2n-p-m,$$

$$\text{or } m-p-2n+p+m.$$

$$\therefore x=1 \text{ or } \frac{m-n}{n-p}.$$

42.

$$(a+b+c)x^2-(2a+b+c)x+a=0.$$

$$(a+b+c)x^2-(2a+b+c)x=-a,$$

$$4x^2(a+b+c)^2-(\ )+(2a+b+c)^2=b^2+2bc+c^2,$$

$$2x(a+b+c)-(2a+b+c)=\pm(b+c),$$

$$2x(a+b+c)=(2a+b+c)\pm(b+c),$$

$$2x(a+b+c)=2a+2b+2c \text{ or } 2a.$$

$$\therefore x=1 \text{ or } \frac{a}{a+b+c}.$$

43.

$$(ax-b)(c-d)=(a-b)(cx-d)x.$$

$$acx-bc-adx+bd=acx^2-adx-bcx^2+bdx,$$

$$bcx^2-acx^2+acx-bdx=bc-bd,$$

$$(bc-ac)x^2+(ac-bd)x=bc-bd,$$

$$4(bc-ac)^2x^2+(\ )+(ac-bd)^2=4b^2c^2-4abc^2-4b^2cd+2abcd+a^2c^2+b^2d^2,$$

$$2(bc-ac)x+(ac-bd)=\pm(2bc-ac-bd),$$

$$2(bc-ac)x=-(ac-bd)\pm(2bc-ac-bd),$$

$$x=\frac{-ac+bd+2bc-ac-bd}{2(bc-ac)}$$

$$\text{or}\quad\frac{-ac+bd-2bc+ac+bd}{2(bc-ac)},$$

$$\therefore\ x=1\text{ or }\frac{b(c-d)}{c(a-b)}.$$

44.

$$\frac{2x+1}{b}-\frac{1}{x}\left(\frac{1}{b}-\frac{2}{a}\right)=\frac{3x+1}{a}.$$

$$\frac{2x+1}{b}-\frac{a-2b}{abx}=\frac{3x+1}{a},$$

$$2ax^2+ax-a+2b=3bx^2+bx,$$

$$2ax^2-3bx^2+ax-bx=a-2b,$$

$$x^2(2a-3b)+x(a-b)=a-2b,$$

$$4x^2(2a-3b)^2+4x(a-b)(2a+3b)=(4a-8b)(2a-3b),$$

$$4x^2(2a-3b)^2+(\ )+(a-b)^2=9a^2-30ab+25b^2,$$

$$2x(2a-3b)+(a-b)=\pm(3a-5b),$$

$$2x(2a-3b)=-a+b\pm(3a-5b),$$

$$2x(2a-3b)=2a-4b\text{ or }-4a+6b.$$

$$\therefore\ x=\frac{a-2b}{2a-3b}\text{ or }-1.$$

Exercise 96.

1. $x^2 + 2ax = a^2$.

Complete the square,

$x^2 + 2ax + a^2 = 2a^2$.

Extract the root,

$x + a = \pm a\sqrt{2}$.

$\therefore x = -a \pm a\sqrt{2}$.

2. $x^2 = 4ax + 7a^2$.

Transpose,

$x^2 - 4ax = 7a^2$.

Complete the square,

$x^2 - 4ax + 4a^2 = 11a^2$.

Extract the root,

$x - 2a = \pm a\sqrt{11}$.

$\therefore x = 2a \pm a\sqrt{11}$.

3. $x^2 = \frac{7m^2}{4} - 3mx$.

$4x^2 = 7m^2 - 12mx$,

$4x^2 + 12mx = 7m^2$,

$4x^2 + (\ ) + (3m)^2 = 16m^2$,

$2x + 3m = \pm 4m$,

$2x = \pm 4m - 3m$.

$\therefore x = \frac{m}{2}$ or $-\frac{7m}{2}$.

4. $x^2 - \frac{5nx}{2} - \frac{3n^2}{2} = 0$.

$2x^2 - 5nx - 3n^2 = 0$,

$4x^2 - 10nx = 6n^2$,

$4x^2 - (\ ) + \frac{25n^2}{4} = \frac{49n^2}{4}$,

$2x - \frac{5n}{2} = \pm\frac{7n}{2}$,

$2x = 6n$ or $-n$.

$\therefore x = 3n$ or $-\frac{n}{2}$.

5. $\frac{a^2}{(x+a)^2} = \frac{b^2}{(x-a)^2}$.

$a^2(x-a)^2 = b^2(x+a)^2$,

$a(x-a) = \pm b(x+a)$,

$ax - a^2 = bx + ab$,

$x(a-b) = a^2 + ab$.

$\therefore x = \frac{a(a+b)}{a-b}$;

or $ax - a^2 = -bx - ab$,

$x(a+b) = a^2 - ab$.

$\therefore x = \frac{a(a-b)}{a+b}$.

6. $cx = ax^2 + bx^2 - \frac{ac}{a+b}$.

$acx + bcx = a^2x^2 + 2abx^2 + b^2x^2 - ac$,

$a^2x^2 + 2abx^2 + b^2x^2 - acx - bcx = ac$,

$x^2(a^2 + 2ab + b^2) - x(ac + bc) = ac$,

$x^2(a^2 + 2ab + b^2) - (\ ) + \frac{c^2}{4} = \frac{4ac + c^2}{4}$,

$x(a+b) - \frac{c}{2} = \pm\frac{\sqrt{4ac + c^2}}{2}$,

$x(a+b) = \frac{c \pm \sqrt{4ac + c^2}}{2}$.

$\therefore x = \frac{c \pm \sqrt{4ac + c^2}}{2(a+b)}$.

7.

$$\frac{a^2x^2}{b^2}+\frac{b^2}{c^2}=\frac{2ax}{c}.$$

$$a^2c^2x^2+b^4=2ab^2cx,$$
$$a^2c^2x^2-2ab^2cx=-b^4,$$
$$a^2c^2x^2-(\ )+b^4=0,$$
$$acx-b^2=0,$$
$$acx=b^2,$$
$$\therefore x=\frac{b^2}{ac}.$$

8

$$(a^2+1)x=ax^2+a.$$
$$a^2x+x=ax^2+a,$$
$$ax^2-(a^2+1)x=-a,$$
$$4a^2x^2-(\ )+(a^2+1)^2=a^4-2a^2+1,$$
$$2ax-(a^2+1)=\pm(a^2-1),$$
$$2ax=(a^2+1)\pm(a^2-1).$$
$$\therefore x=a \text{ or } \frac{1}{a}.$$

9.

$$\frac{a}{x-a}+\frac{b}{x-b}=\frac{2c}{x-c}.$$

$$a(x-b)(x-c)+b(x-a)(x-c)=2c(x-a)(x-b),$$
$$ax^2-abx-acx+abc+bx^2-abx-bcx+abc=2cx^2-2acx-2bcx+2abc,$$
$$x^2(a+b-2c)+x(ac+bc-2ab)=0.$$
$$\therefore x=0 \text{ or } \frac{2ab-ac-bc}{a+b-2c}.$$

10.

$$\frac{1}{a+b+x}=\frac{1}{a}+\frac{1}{b}+\frac{1}{x}.$$

$$abx=abx+b^2x+bx^2+a^2x+abx+ax^2+a^2b+ab^2+abx,$$
$$x^2(a+b)+x(a+b)^2=-ab(a+b).$$

Divide by $(a+b)$,

$$x^2+(a+b)x=-ab,$$
$$4x^2+(\ )+(a+b)^2=a^2-2ab+b^2,$$
$$2x+(a+b)=\pm(a-b),$$
$$2x=-2b \text{ or } -2a.$$
$$\therefore x=-b \text{ or } -a.$$

11.

$$\frac{1}{a-x}-\frac{1}{a+x}=\frac{3+x^2}{a^2-x^2}.$$

$$a+x-a+x=3+x^2,$$
$$x^2-2x=-3,$$
$$x^2-2x+1=-2,$$
$$x-1=\pm\sqrt{-2}.$$
$$\therefore x=1\pm\sqrt{-2}.$$

12.

$$\frac{x^2+2ab(a^2+b^2)}{a^2+b^2}=2x.$$

$$x^2+2ab(a^2+b^2)=2x(a^2+b^2),$$
$$x^2-2x(a^2+b^2)=-2a^3b-2ab^3,$$
$$x^2-(\ )+(a^2+b^2)^2=a^4-2a^3b+2a^2b^2-2ab^3+b^4,$$
$$x^2-(\ )+(a^2+b^2)^2=(a^2+b^2)(a-b)^2,$$
$$x-(a^2+b^2)=\pm(a-b)\sqrt{a^2+b^2}.$$
$$\therefore x=a^2+b^2\pm(a-b)\sqrt{a^2+b^2}.$$

13. $\dfrac{(2x-a)^2}{2x-a+2b}=b.$

$4x^2-4ax+a^2=2bx-ab+2b^2,$

$4x^2-2x(2a+b)=-a^2-ab+2b^2,$

$16x^2-(\ )+(2a+b)^2=9b^2,$

$4x-(2a+b)=\pm 3b,$

$4x=2a-2b,$

or $2a+4b.$

$\therefore x=\dfrac{a-b}{2}$ or $\dfrac{a+2b}{2}.$

14. $x^2+ax=a+x.$

$x^2+ax-x=a,$

$x^2+(a-1)x=a,$

$4x^2+(\ )+(a-1)^2=a^2+2a+1,$

$2x+(a-1)=\pm(a+1),$

$2x=-(a-1)\pm(a+1).$

$\therefore x=1$ or $-a.$

15. $x^2+ax=bx+ab.$

$x^2+(a-b)x=ab,$

$4x^2+(\ )+(a-b)^2=(a+b)^2,$

$2x+(a-b)=\pm(a+b),$

$2x=-2a$ or $2b.$

$\therefore x=-a$ or $b.$

16. $\dfrac{x}{a}+\dfrac{a}{x}=\dfrac{x}{b}+\dfrac{b}{x}.$

$x^2b+a^2b=ax^2+ab^2,$

$x^2b-x^2a=ab^2-a^2b,$

$x^2(b-a)=ab(b-a).$

Divide by $(b-a),$

$x^2=ab.$

$\therefore x=\pm\sqrt{ab}.$

17.

$$\frac{1}{x}+\frac{1}{x+b}=\frac{1}{a}+\frac{1}{a+b}.$$

$a^2x+a^2b+abx+ab^2+a^2x+abx=ax^2+abx+bx^2+b^2x+ax^2+abx,$

$2ax^2+bx^2-2a^2x+b^2x=a^2b+ab^2,$

$(2a+b)x^2-(2a^2-b^2)x=a^2b+ab^2,$

$4x^2(2a+b)^2-(\ )+(2a^2-b^2)^2=4a^4+8a^3b+8a^2b^2+4ab^3+b^4,$

$2x(2a+b)-(2a^2-b^2)=\pm(2a^2+2ab+b^2),$

$2x(2a+b)=(4a^2+2ab)$ or $-(2ab+2b^2).$

$\therefore x=a$ or $-\dfrac{b(a+b)}{2a+b}$

18. $\dfrac{a}{3}+\dfrac{5x}{4}-\dfrac{x^2}{3a}=0.$

$4a^2+15ax-4x^2=0,$

$4x^2-15ax=4a^2,$

$64x^2-(\ )+225a^2=289a^2,$

$8x-15a=\pm 17a,$

$8x=32a$ or $-2a.$

$\therefore x=4a$ or $-\dfrac{a}{4}.$

19. $\dfrac{x+3}{x-3}=a+\dfrac{x-3}{x+3}.$

$\dfrac{x+3}{x-3}-\dfrac{x-3}{x+3}=a,$

$x^2+6x+9-x^2$

$+6x-9=ax^2-9a,$

$ax^2-12x=9a,$

$a^2x^2-12ax=9a^2,$

$a^2x^2-(\ )+36=9a^2+36,$

$ax-6=\pm\sqrt{9(a^2+4)},$

$ax=6\pm 3\sqrt{a^2+4}.$

$\therefore x=\dfrac{6\pm 3\sqrt{a^2+4}}{a}.$

20.

$$mx^2 - 1 = \frac{x(m^3 - n^2)}{mn}.$$

$$m^2nx^2 - mn = x(m^3 - n^2),$$

$$m^2nx^2 - (m^3 - n^2)x = mn,$$

$$4m^4n^2x^2 - (\ ) + (m^3 - n^2)^2 = m^6 + 2m^3n^2 + n^4,$$

$$2m^2nx - (m^3 - n^2) = \pm(m^3 + n^2),$$

$$2m^2nx = 2m^3 \text{ or } -2n^2.$$

$$\therefore x = \frac{m}{n} \text{ or } -\frac{n}{m^2}.$$

21.

$$(ax - b)(bx - a) = c^2,$$

$$abx^2 - b^2x - a^2x + ab = c^2,$$

$$abx^2 - (a^2 + b^2)x = c^2 - ab,$$

$$4a^2b^2x^2 - 4ab(a^2 + b^2)x = 4abc^2 - 4a^2b^2,$$

$$4a^2b^2x^2 - (\ ) + (a^2 + b^2)^2 = (a^2 - b^2)^2 + 4abc^2,$$

$$2abx - (a^2 + b^2) = \pm\sqrt{(a^2 - b^2)^2 + 4abc^2}.$$

$$\therefore x = \frac{a^2 + b^2 \pm \sqrt{(a^2 - b^2)^2 + 4abc^2}}{2ab}.$$

22. $\dfrac{ax + b}{bx + a} = \dfrac{mx + n}{nx + m}.$

$$anx^2 + bnx + amx + bm = bmx^2 + bnx + amx + an,$$

$$anx^2 - bmx^2 = an - bm,$$

$$x^2(an - bm) = an - bm,$$

$$x^2 = 1.$$

$$\therefore x = \pm 1.$$

23. $\dfrac{m}{m + x} + \dfrac{m}{m - x} = c.$

$$m^2 - mx + m^2 + mx = cm^2 - cx^2,$$

$$cx^2 = cm^2 - 2m^2,$$

$$x\sqrt{c} = \pm m\sqrt{c - 2}.$$

$$\therefore x = \pm m\sqrt{\frac{c-2}{c}}.$$

24.

$$\frac{(a - 1)^2x^2 + 2(3a - 1)x}{4a - 1} = 1.$$

$$(a - 1)^2x^2 + 2(3a - 1)x = 4a - 1,$$

$$4(a - 1)^4x^2 + (\ ) + (6a - 2)^2 = 16a^3,$$

$$2(a - 1)^2x + (6a - 2) = \pm 4a\sqrt{a},$$

$$2(a - 1)^2x = 2 - 6a \pm 4a\sqrt{a}.$$

$$\therefore x = \frac{1 - 3a \pm 2a\sqrt{a}}{(a - 1)^2}.$$

25.

$$\frac{(a^2-b^2)(x^2+1)}{a^2+b^2} = 2x.$$

$$a^2x^2 - b^2x^2 + a^2 - b^2 = 2a^2x + 2b^2x,$$
$$a^2x^2 - b^2x^2 - 2a^2x - 2b^2x = b^2 - a^2,$$
$$x^2(a^2-b^2) - 2x(a^2+b^2) = b^2 - a^2,$$
$$x^2(a^2-b^2)^2 - 2x(a^4-b^4) = -a^4 + 2a^2b^2 - b^4,$$
$$x^2(a^2-b^2)^2 - (\ ) + (a^2+b^2)^2 = 4a^2b^2,$$
$$x(a^2-b^2) - (a^2+b^2) = \pm 2ab,$$
$$x(a^2-b^2) = a^2 + b^2 \pm 2ab$$
$$= (a \pm b)^2.$$
$$\therefore x = \frac{a+b}{a-b} \text{ or } \frac{a-b}{a+b}.$$

26.

$$\frac{x^2 - 4mnx}{(m+n)^2} = (m-n)^2.$$

$$x^2 - 4mnx = m^4 - 2m^2n^2 + n^4,$$
$$x^2 - (\ ) + 4m^2n^2 = m^4 + 2m^2n^2 + n^4,$$
$$x - 2mn = \pm(m^2+n^2),$$
$$x = 2mn \pm (m^2+n^2)$$
$$= (m+n)^2 \text{ or } -(m-n)^2.$$

27.

$$x^2 + \frac{a-b}{ab^2} = \frac{14a^2 - 5ab - 10b^2}{18a^2b^2} + \frac{(2a-3b)x}{2ab}$$

$$18a^2b^2x^2 - (18a^2b - 27ab^2)x = -4a^2 + 13ab - 10b^2,$$
$$144a^2b^2x^2 - (144a^2b - 216ab^2)x = -32a^2 + 104ab - 80b^2,$$
$$144a^2b^2x^2 - (\ ) + (6a - 9b)^2 = 4a^2 - 4ab + b^2,$$
$$12abx - (6a - 9b) = \pm(2a - b),$$
$$12abx = 8a - 10b \text{ or } 4a - 8b.$$
$$\therefore x = \frac{4a-5b}{6ab} \text{ or } \frac{a-2b}{3ab}.$$

28.

$$abx^2 + \frac{b^2x}{c} = \frac{6a^2 + ab - 2b^2}{c^2} - \frac{3a^2x}{c}.$$

$$abc^2x^2 + b^2cx = 6a^2 + ab - 2b^2 - 3a^2cx,$$
$$abc^2x^2 + (3a^2c + b^2c)x = 6a^2 + ab - 2b^2,$$
$$4a^2b^2c^2x^2 + 4abcx(3a^2 + b^2) = 24a^3b + 4a^2b^2 - 8ab^3,$$
$$4a^2b^2c^2x^2 + (\ ) + (3a^2 + b^2)^2 = 9a^4 + 24a^3b + 10a^2b^2 - 8ab^3 + b^4,$$
$$2abcx + 3a^2 + b^2 = \pm(3a^2 + 4ab - b^2).$$
$$\therefore x = \frac{2a-b}{ac} \text{ or } -\frac{3a+2b}{bc}.$$

29.

$$\frac{x^2}{3m-2a}-\frac{m^2-4a^2}{4a-6m}=\frac{x}{2}.$$

$$\frac{2x^2}{3m-2a}-\frac{4a^2-m^2}{3m-2a}=x,$$

$$2x^2-4a^2+m^2=3mx-2ax,$$

$$2x^2+(2a-3m)x=4a^2-m^2,$$

$$16x^2+(\ )+(2a-3m)^2=(36a^2-12am+m^2),$$

$$4x+(2a-3m)=\pm(6a-m),$$

$$4x=-8a+4m \text{ or } 4a+2m.$$

$$\therefore x=m-2a \text{ or } a+\frac{m}{2}.$$

30.

$$6x+\frac{(a+b)^2}{x}=5(a-b)+\frac{25ab}{6x}$$

$$36x^2+6(a+b)^2=30x(a-b)+25ab,$$

$$36x^2-30x(a-b)=25ab-6(a+b)^2,$$

$$36x^2-(\ )+\frac{25}{4}(a-b)^2=\frac{a^2+2ab+b^2}{4},$$

$$6x-\frac{5}{2}(a-b)=\pm\frac{a+b}{2},$$

$$6x=\frac{6a-4b}{2} \text{ or } \frac{4a-6b}{2}.$$

$$\therefore x=\frac{3a-2b}{6} \text{ and } \frac{2a-3b}{6}.$$

31.

$$\tfrac{2}{3}(x^2+a^2+ab)=\tfrac{1}{2}x(20a+4b).$$

$$8x^2+8a^2+8ab=20ax+4bx,$$

$$8x^2-(20a+4b)x=-8a^2-8ab,$$

$$16x^2-2(20a+4b)x=-16a^2-16ab,$$

$$16x^2-(\ )+(5a+b)^2=9a^2-6ab+b^2,$$

$$4x-(5a+b)=\pm(3a-b),$$

$$4x=(5a+b)\pm(3a-b).$$

$$\therefore x=2a \text{ or } \frac{a+b}{2}.$$

32.

$$x^2-(b-a)c=ax-bx+cx.$$

$$x^2+bx-ax-cx=(b-a)c,$$

$$x^2+(b-a-c)x=(b-a)c,$$

$$4x^2+(\ )+(b-a-c)^2=a^2+b^2+c^2-2ab-2ac+2bc,$$

$$2x+(b-a-c)=\pm(a-b-c),$$

$$2x=2a-2b \text{ or } 2c.$$

$$\therefore x=a-b \text{ or } c.$$

33.

$$x^2 - 2mx = (n-p+m)(n-p-m).$$
$$x^2 - 2mx = n^2 - 2np + p^2 - m^2,$$
$$x^2 - (\ ) + m^2 = n^2 - 2np + p^2,$$
$$x - m = \pm(n-p).$$
$$\therefore x = m \pm (n-p).$$

34.

$$x^2 - (m+n)x = \tfrac{1}{4}(p+q+m+n)(p+q-m-n).$$
$$4x^2 - 4(m+n)x = (p+q+m+n)(p+q-m-n),$$
$$4x^2 - (\ ) + (m+n)^2 = p^2 + 2pq + q^2,$$
$$2x - (m+n) = \pm(p+q),$$
$$2x = m+n \pm (p+q).$$
$$\therefore x = \frac{m+n \pm (p+q)}{2}.$$

35.

$$mnx^2 - (m+n)(mn+1)x + (m+n)^2 = 0.$$
$$mnx^2 - (m^2n + mn^2 + m + n)x = -m^2 - 2mn - n^2,$$
$$4m^2n^2x^2 - 4mn(m^2n + mn^2 + m + n)x = -4m^3n - 8m^2n^2 - 4mn^3,$$
$$4m^2n^2x^2 - (\ ) + (m^2n + mn^2 + m + n)^2 = m^4n^2 + 2m^3n^3 - 2m^3n - 4m^2n^2 + m^2n^4 - 2mn^3 + m^2 + 2mn + n^2,$$
$$2mnx - (m^2n + mn^2 + m + n) = \pm(m^2n + mn^2 - m - n),$$
$$2mnx = 2m^2n + 2mn^2 \text{ or } 2m + 2n.$$
$$\therefore x = m + n \text{ or } \frac{m+n}{mn}.$$

36.

$$\frac{2b - x - 2a}{bx} + \frac{4b - 7a}{ax - bx} = \frac{x - 4a}{ab - b^2}.$$
$$4ab - ax - 2a^2 - 2b^2 + bx + 4b^2 - 7ab = x^2 - 4ax,$$
$$x^2 - 3ax - bx = 2b^2 - 3ab - 2a^2,$$
$$x^2 - (3a+b)x = 2b^2 - 3ab - 2a^2,$$
$$4x^2 - 4(3a+b)x = 8b^2 - 12ab - 8a^2,$$
$$4x^2 - (\ ) + (3a+b)^2 = a^2 - 6ab + 9b^2,$$
$$2x - (3a+b) = \pm(a - 3b),$$
$$2x = 4a - 2b \text{ or } 2a + 4b.$$
$$\therefore x = 2a - b \text{ or } a + 2b.$$

37.

$$2x^2(a^2-b^2)-(3a^2+b^2)(x-1)=(3b^2+a^2)(x+1).$$
$$2x^2(a^2-b^2)-3a^2x-b^2x+3a^2+b^2=3b^2x+a^2x+3b^2+a^2,$$
$$2x^2(a^2-b^2)-4a^2x-4b^2x=2b^2-2a^2.$$
Divide by 2, $x^2(a^2-b^2)-2(a^2+b^2)x=b^2-a^2,$
$$x^2(a^2-b^2)^2-2(a^4-b^4)x=(b^2-a^2)(a^2-b^2),$$
$$x^2(a^2-b^2)^2-(\ )+(a^2+b^2)^2=4a^2b^2,$$
$$x(a^2-b^2)-(a^2+b^2)=\pm 2ab,$$
$$x(a^2-b^2)=(a+b)^2 \text{ or } (a-b)^2.$$
$$\therefore x=\frac{a+b}{a-b} \text{ or } \frac{a-b}{a+b}.$$

38.

$$\frac{a-2b-x}{a^2-4b^2}-\frac{5b-x}{ax+2bx}+\frac{2a-x-19b}{2bx-ax}=0.$$
$$\frac{a-2b-x}{(a-2b)(a+2b)}-\frac{5b-x}{(a+2b)x}-\frac{2a-x-19b}{(a-2b)x}=0,$$
$$ax-2bx-x^2-5ab+ax+10b^2-2bx-2a^2$$
$$+ax+15ab+2bx+38b^2=0,$$
$$3ax-2bx-x^2+10ab+48b^2-2a^2=0.$$
$$x^2-(3a-2b)x=-2a^2+10ab+48b^2,$$
$$4x^2-(\ )+(3a-2b)^2=a^2+28ab+196b^2,$$
$$2x-(3a-2b)=\pm(a+14b),$$
$$2x=4a+12b \text{ or } 2a-16b.$$
$$\therefore x=2a+6b \text{ or } a-8b.$$

39.

$$\frac{x+13a+3b}{5a-3b-x}-1=\frac{a-2b}{x+2b}$$
$$x^2+13ax+5bx+26ab+6b^2$$
$$-5ax+5bx+x^2+6b^2-10ab=5a^2-13ab-ax+6b^2+2bx,$$
$$2x^2+(9a+8b)x=5a^2-29ab-6b^2,$$
$$16x^2+8(9a+8b)x=40a^2-232ab-48b^2,$$
$$16x^2+(\ )+(9a+8b)^2=121a^2-88ab+16b^2,$$
$$4x+(9a+8b)=\pm(11a-4b),$$
$$4x=2a-12b \text{ or } -(20a+4b).$$
$$\therefore x=\frac{a}{2}-3b \text{ or } -(5a+b).$$

40.

$$\frac{x+3b}{8a^2-12ab}-\frac{3b}{9b^2-4a^2}-\frac{a+3b}{(2a+3b)(x-3b)}=0.$$

$$\frac{x+3b}{4a(2a-3b)}+\frac{3b}{(2a-3b)(2a+3b)}-\frac{a+3b}{(2a+3b)(x-3b)}=0,$$

$$(x^2-9b^2)(2a+3b)+12abx-36ab^2-4a(2a^2+3ab-9b^2)=0.$$

$$(2a+3b)^2x^2+12abx=8a^3+12a^2b+18ab^2+27b^3,$$

$$4(2a+3b)^2x^2+(\ )+(12ab)^2=64a^4+192a^3b+432a^2b^2+432ab^3+324b^4,$$

$$2(2a+3b)x+12ab=\pm(8a^2+12ab+18b^2),$$

$$(2a+3b)x=4a^2+9b^2 \text{ or } -(4a^2+12ab+9b^2)$$

$$\therefore x=\frac{4a^2+9b^2}{2a+3b} \text{ or } -(2a+3b).$$

41.

$$nx^2+px-px^2-mx+m-n=0.$$

$$nx^2-px^2+px-mx=n-m,$$

$$x^2(n-p)+x(p-m)=n-m,$$

$$4x^2(n-p)^2+(\ )+(p-m)^2=4n^2-4mn-4pn+4pm+p^2-2pm+m^2,$$

$$2x(n-p)+(p-m)=\pm(2n-p-m),$$

$$2x(n-p)=m-p+2n-p-m,$$

$$\text{or } m-p-2n+p+m.$$

$$\therefore x=1 \text{ or } \frac{m-n}{n-p}.$$

42.

$$(a+b+c)x^2-(2a+b+c)x+a=0.$$

$$(a+b+c)x^2-(2a+b+c)x=-a,$$

$$4x^2(a+b+c)^2-(\ )+(2a+b+c)^2=b^2+2bc+c^2,$$

$$2x(a+b+c)-(2a+b+c)=\pm(b+c),$$

$$2x(a+b+c)=(2a+b+c)\pm(b+c),$$

$$2x(a+b+c)=2a+2b+2c \text{ or } 2a.$$

$$\therefore x=1 \text{ or } \frac{a}{a+b+c}.$$

43.

$$(ax-b)(c-d)=(a-b)(cx-d)x.$$

$$acx-bc-adx+bd=acx^2-adx-bcx^2+bdx,$$

$$bcx^2-acx^2+acx-bdx=bc-bd,$$

$$(bc-ac)x^2+(ac-bd)x=bc-bd,$$

$$4(bc-ac)^2x^2+(\ )+(ac-bd)^2=4b^2c^2-4abc^2-4b^2cd+2abcd+a^2c^2+b^2d^2,$$

$$2(bc-ac)x+(ac-bd)=\pm(2bc-ac-bd),$$

$$2(bc-ac)x=-(ac-bd)\pm(2bc-ac-bd),$$

$$x=\frac{-ac+bd+2bc-ac-bd}{2(bc-ac)}$$

$$\text{or}\quad\frac{-ac+bd-2bc+ac+bd}{2(bc-ac)}.$$

$$\therefore\ x=1\text{ or }\frac{b(c-d)}{c(a-b)}.$$

44.

$$\frac{2x+1}{b}-\frac{1}{x}\left(\frac{1}{b}-\frac{2}{a}\right)=\frac{3x+1}{a}.$$

$$\frac{2x+1}{b}-\frac{a-2b}{abx}=\frac{3x+1}{a},$$

$$2ax^2+ax-a+2b=3bx^2+bx,$$

$$2ax^2-3bx^2+ax-bx=a-2b,$$

$$x^2(2a-3b)+x(a-b)=a-2b,$$

$$4x^2(2a-3b)^2+4x(a-b)(2a+3b)=(4a-8b)(2a-3b),$$

$$4x^2(2a-3b)^2+(\ )+(a-b)^2=9a^2-30ab+25b^2,$$

$$2x(2a-3b)+(a-b)=\pm(3a-5b),$$

$$2x(2a-3b)=-a+b\pm(3a-5b),$$

$$2x(2a-3b)=2a-4b\text{ or }-4a+6b.$$

$$\therefore\ x=\frac{a-2b}{2a-3b}\text{ or }-1.$$

45.

$$\frac{1}{2x^2+x-1}+\frac{1}{2x^2-3x+1}=\frac{a}{2bx-b}-\frac{2bx+b}{ax^2-a}.$$

$$\frac{1}{(2x-1)(x+1)}+\frac{1}{(2x-1)(x-1)}=\frac{a}{b(2x-1)}-\frac{2bx+b}{a(x-1)(x+1)}.$$

$$\text{L.C.D.} = ab(x-1)(x+1)(2x-1).$$

Simplify, $abx-ab+abx+ab=a^2x^2-a^2-4b^2x^2+b^2,$

$$2abx=a^2x^2-a^2-4b^2x^2+b^2,$$

$$4b^2x^2-a^2x^2+2abx=b^2-a^2,$$

$$x^2(4b^2-a^2)+x(2ab)=b^2-a^2,$$

$$4x^2(4b^2-a^2)^2+4x(2ab)(4b^2-a^2)=16b^4-20b^2a^2+4a^4,$$

$$4x^2(4b^2-a^2)^2+(\ )+(2ab)^2=16b^4-16b^2a^2+4a^4,$$

$$2x(4b^2-a^2)+2ab=\pm(4b^2-2a^2),$$

$$2x(4b^2-a^2)=4b^2-2ab-2a^2$$

or $2a^2-2ab-4b^2,$

$$x=\frac{2b^2-ab-a^2}{4b^2-a^2} \text{ or } \frac{a^2-ab-2b^2}{4b^2-a^2}.$$

$$\therefore x=\frac{b-a}{2b-a} \text{ or } -\frac{b+a}{2b+a}.$$

Exercise 97.

1. $(x+1)(x-2)(x^2+x-2)=0.$

$(x+1)(x-2)(x-1)(x+2)=0.$

$\therefore x=-1, 2, 1, -2.$

2. $(x^2-3x+2)(x^2-x-12)=0.$

$(x-2)(x-1)(x-4)(x+3)=0.$

$\therefore x=2, 1, 4, -3.$

3. $(x+1)(x-2)(x+3)=-6.$

$x^3+2x^2-5x-6=-6,$

$x^3+2x^2-5x=0.$

$x(x^2+2x-5)=0;$

which is satisfied if $x=0,$

or if $x^2+2x-5=0.$

By solving $x^2+2x-5=0,$

$x=-1\pm\sqrt{6}.$

$\therefore x=0, -1\pm\sqrt{6}.$

4. $2x^3+4x^2-70x=0.$

$2x(x^2+2x-35)=0,$

$2x(x+7)(x-5)=0;$

which is satisfied if $x=0,$

$x+7=0,$

or if $x-5=0.$

$\therefore x=0, -7, 5.$

5. $(x^2-x-6)(x^2-x-20)=0.$

$(x-3)(x+2)(x-5)(x+4)=0.$

$\therefore x=3, -2, 5, -4.$

6.

$$x(x+1)(x+2) = a(a+1)(a+2).$$
$$x^3 + 3x^2 + 2x = a^3 + 3a^2 + 2a,$$
$$x^3 + 3x^2 + 2x - a^3 - 3a^2 - 2a = 0,$$
$$(x^3 - a^3) + (3x^2 - 3a^2) + (2x - 2a) = 0,$$
$$(x^2 + ax + a^2)(x-a) + (3x+3a)(x-a) + 2(x-a) = 0,$$
$$(x^2 + ax + a^2 + 3x + 3a + 2)(x-a) = 0.$$
$$\therefore x - a = 0,$$
and $x = a$.

Or, $x^2 + ax + a^2 + 3x + 3a + 2 = 0.$
$$x^2 + ax + 3x = -a^2 - 3a - 2,$$
$$x^2 + x(a+3) = -a^2 - 3a - 2,$$
$$4x^2 + (\ ) + (a+3)^2 = 1 - 6a - 3a^2,$$
$$2x + (a+3) = \pm\sqrt{1 - 6a - 3a^2}.$$
$$\therefore x = -\frac{a+3}{2} \pm \tfrac{1}{2}\sqrt{1 - 6a - 3a^2}.$$

7. $x^3 - x^2 - x + 1 = 0.$
$(x^2 - 1)(x - 1) = 0,$
$(x+1)(x-1)(x-1) = 0.$
$\therefore x = 1,\ 1,\ -1.$

8. $8x^3 - 1 = 0.$
$(2x-1)(4x^2+2x+1) = 0.$
From the first factor,
$x = \frac{1}{2},$
or $4x^2 + 2x = -1.$
$16x^2 + (\ ) + 1 = -3,$
$4x + 1 = \pm\sqrt{-3}.$
$\therefore x = \frac{1}{4}(-1 \pm \sqrt{-3}).$

9. $8x^3 + 1 = 0.$
$(2x+1)(4x^2-2x+1) = 0.$
From the first factor,
$x = -\frac{1}{2},$
or $4x^2 - 2x = -1.$
$4x^2 - 2x = -1,$
$16x^2 - (\ ) + 1 = -3,$
$4x - 1 = \pm\sqrt{-3}.$
$\therefore x = \frac{1}{4}(1 \pm \sqrt{-3}).$

10. $x^6 - 1 = 0.$
$(x^3 + 1)(x^3 - 1) = 0,$
$(x+1)(x^2 - x + 1)$
$(x-1)(x^2 + x + 1) = 0,$
and $x = -1,\ 1.$
From $x^2 - x + 1 = 0,$
$x^2 - x = -1,$
$4x^2 - (\ ) + 1 = -3,$
$2x - 1 = \pm\sqrt{-3},$
and $x = \dfrac{1 \pm \sqrt{-3}}{2}.$
From $x^2 + x + 1 = 0,$
$x^2 + x = -1,$
$4x^2 + (\ ) + 1 = -3,$
$2x + 1 = \pm\sqrt{-3},$
and $x = \dfrac{-1 \pm \sqrt{-3}}{2}.$
$\therefore x = 1,\ -1,\ \dfrac{1 \pm \sqrt{-3}}{2},$
and $\dfrac{-1 \pm \sqrt{-3}}{2}.$

11. $x(x-a)(x^2-b^2)=0.$

$x(x-a)(x+b)(x-b)=0.$

$\therefore\ x=0,\ a,\ \pm b.$

12. $n(x^3+1)+(x+1)=0.$

$(x+1)(nx^2-nx+n+1)=0.$

$(n+1)(x+1)(x^2-x+1)=0.$

If $x+1=0,$

$x=-1;$

or if $nx^2-nx+n+1=0,$

by solving, $x=\frac{1}{2}\pm\frac{1}{2n}\sqrt{-3n^2-4n}.$

Exercise 98.

1. $x^6+7x^3=8.$

$4x^6+(\ )+49=81,$

$2x^3+7=\pm 9,$

$2x^3=-7\pm 9,$

$x^3=-8 \text{ or } 1.$

Since $x^3=-8,$

$x^3+8=0,$

or $(x+2)(x^2-2x+4)=0.$

Whence $x+2=0,$

and $x=-2,$

or $x^2-2x+4=0.$

$x^2-2x=-4,$

$x^2-(\ )+1=-3,$

$x-1=\pm\sqrt{-3}.$

$\therefore\ x=1\pm\sqrt{-3}.$

Since $x^3=1,$

$x^3-1=0,$

or $(x-1)(x^2+x+1)=0.$

Whence $x-1=0,$

and $x=1,$

or $x^2+x+1=0,$

$x^2+x=-1,$

$4x^2+(\ )+1=-3,$

$2x+1=\pm\sqrt{-3}.$

$\therefore\ x=\frac{1}{2}(-1\pm\sqrt{-3}).$

$\therefore\ x=-2,\ 1,\ 1\pm\sqrt{-3},$

and $\frac{1}{2}(-1\pm\sqrt{-3}).$

2. $x^4-5x^2+4=0.$

$x^4-5x^2=-4,$

$4x^4-(\ )+25=9,$

$2x^2-5=\pm 3,$

$2x^2=5\pm 3,$

$x^2=4 \text{ or } 1.$

$\therefore\ x=\pm 2,\ \pm 1.$

3. $37x^2-9=4x^4.$

$4x^4-37x^2=-9,$

$64x^4-(\ )+(37)^2=1225,$

$8x^2-37=\pm 35,$

$8x^2=72 \text{ or } 2,$

$x^2=9 \text{ or } \frac{1}{4}.$

$\therefore\ x=\pm 3 \text{ or } \pm\frac{1}{2}.$

4. $16x^8=17x^4-1.$

$16x^8-17x^4=1,$

$1024x^8-(\ )+(17)^2=225,$

$32x^4-17=\pm 15,$

$32x^4=32 \text{ or } 2,$

$x^4=1 \text{ or } \frac{1}{16}.$

Since $x^4=1,$

$x^4-1=0,$

or $(x^2+1)(x+1)(x-1)=0.$

$\therefore\ x=\pm\sqrt{-1},\ -1,\ \text{or } 1.$

Since $x^4=\frac{1}{16},$

$x^4-\frac{1}{16}=0,$

or $(x^2+\frac{1}{4})(x+\frac{1}{2})(x-\frac{1}{2})=0.$

$\therefore\ x=\pm\sqrt{-\frac{1}{4}},\ -\frac{1}{2},\ \text{or } \frac{1}{2}.$

$\therefore$ the roots are

$\pm 1,\ \pm\sqrt{-1},\ \pm\frac{1}{2},\ \pm\sqrt{-\frac{1}{4}}.$

5. $32x^{10}-33x^5+1=0.$

$32x^{10}-33x^5=-1,$

$4096x^{10}-(\ )+(33)^2=961,$

$64x^5-33=\pm 31,$

$64x^5=64 \text{ or } 2,$

$x^5=1 \text{ or } \frac{1}{32}.$

$\therefore x=1 \text{ or } \frac{1}{2}.$

Other roots may be found by methods given later.

6. $(x^2-2)^2=\frac{1}{4}(x^2+12).$

$x^4-4x^2+4=\frac{x^2+12}{4},$

$4x^4-16x^2+16=x^2+12,$

$4x^4-17x^2=-4,$

$64x^4-(\ )+(17)^2=225,$

$8x^2-17=\pm 15,$

$8x^2=2 \text{ or } 32,$

$x^2=\frac{1}{4} \text{ or } 4.$

$\therefore x=\pm\frac{1}{2} \text{ or } \pm 2.$

7. $x^{4n}-\frac{5x^{2n}}{3}-\frac{25}{12}=0.$

$12x^{4n}-20x^{2n}-25=0,$

$12x^{4n}-20x^{2n}=25,$

$36x^{4n}-(\ )+25=100,$

$6x^{2n}-5=\pm 10,$

$6x^{2n}=15 \text{ or } -5,$

$x^{2n}=\frac{5}{2} \text{ or } -\frac{5}{6}.$

$\therefore x=\sqrt[2n]{\frac{5}{2}} \text{ or } \sqrt[2n]{-\frac{5}{6}}.$

8. $(x^2-9)^2=3+11(x^2-2).$

$x^4-18x^2+81=11x^2-19,$

$x^4-29x^2=-100,$

$4x^4-(\ )+(29)^2=441,$

$2x^2-29=\pm 21,$

$x^2=25 \text{ or } 4.$

$\therefore x=\pm 5 \text{ or } \pm 2.$

9. $x^6+14x^3+24=0.$

$x^6+14x^3=-24,$

$x^6+(\ )+49=25,$

$x^3+7=\pm 5,$

$x^3=-2 \text{ or } -12.$

$\therefore x=\sqrt[3]{-2} \text{ or } \sqrt[3]{-12}.$

10. $19x^4+216x^7=x.$

$216x^7+19x^4-x=0,$

$x(216x^6+19x^3-1)=0,$

$x(27x^3-1)(8x^3+1)=0,$

$x(3x-1)(9x^2+3x+1)$

$(2x+1)(4x^2-2x+1)=0.$

$\therefore x=0, \frac{1}{3}, -\frac{1}{2}.$

From

$9x^2+3x+1=0,$

$9x^2+3x=-1,$

$9x^2+(\ )+\frac{1}{4}=-\frac{3}{4},$

$3x+\frac{1}{2}=\pm\frac{1}{2}\sqrt{-3},$

$3x=-\frac{1}{2}\pm\frac{1}{2}\sqrt{-3}.$

$\therefore x=\frac{1}{6}(-1\pm\sqrt{-3}).$

From

$4x^2-2x+1=0,$

$4x^2-2x=-1,$

$4x^2-2x+\frac{1}{4}=-\frac{3}{4},$

$2x-\frac{1}{2}=\pm\frac{1}{2}\sqrt{-3},$

$2x=\frac{1}{2}\pm\frac{1}{2}\sqrt{-3}.$

$\therefore x=\frac{1}{4}(1\pm\sqrt{-3}).$

$\therefore$ roots are $0, \frac{1}{3}, -\frac{1}{2},$

$\frac{1}{6}(-1\pm\sqrt{-3}), \frac{1}{4}(1\pm\sqrt{-3}).$

11. $x^8+22x^4+21=0.$

$x^8+22x^4=-21,$

$x^8+(\ )+121=100,$

$x^4+11=\pm 10,$

$x^4=-1 \text{ or } -21.$

$\therefore x=\pm\sqrt[4]{-1}$

$\text{or } \pm\sqrt[4]{-21}.$

That is, the roots are imaginary.

12. $x^{2m}+3x^m-4=0.$

$4x^{2m}+12x^m-16=0,$

$4x^{2m}+(\ )+(3)^2=25,$

$2x^m+3=\pm 5,$

$2x^m=2 \text{ or } -8.$

$\therefore x=1 \text{ or } \sqrt[m]{-4}.$

13.

$$4x^4 - 20x^3 + 23x^2 + 5x = 6.$$

$$4x^4 - 20x^3 + 23x^2 + 5x - 6 = 0.$$

$$4x^4 - 20x^3 + 23x^2 + 5x - 6 \,\big|\, 2x^2 - 5x - \tfrac{1}{2}$$

$$4x^4$$

$$4x^2 - 5x \,\big|\, -20x^3 + 23x^2$$
$$\qquad\quad -20x^3 + 25x^2$$

$$4x^2 - 10x - \tfrac{1}{2} \,\big|\, -2x^2 + 5x - 6$$
$$\qquad\qquad\qquad\quad -2x^2 + 5x + \tfrac{1}{4}$$
$$\qquad\qquad\qquad\qquad\quad -\tfrac{25}{4}$$

If $\frac{25}{4}$ were added to both members the square would be complete, and the equation would read

$$4x^4 - 20x^3 + 23x^2 + 5x + \tfrac{1}{4} = \tfrac{25}{4}.$$

Extract the root, $2x^2 - 5x - \frac{1}{2} = \pm\frac{5}{2}$,

$$2x^2 - 5x = 3 \text{ or } -2,$$
$$16x^2 - (\,) + 25 = 49 \text{ or } 9,$$
$$4x - 5 = \pm 7 \text{ or } \pm 3,$$
$$4x = 12, \text{ or } -2, \text{ or } 8, \text{ or } 2.$$
$$\therefore\ x = 3, -\tfrac{1}{2}, 2, \tfrac{1}{2}.$$

14.

$$\frac{1}{x^{2n}} + \frac{3}{x^n} - 20 = 0.$$

$$1 + 3x^n - 20x^{2n} = 0,$$
$$20x^{2n} - 3x^n = 1,$$
$$1600x^{2n} - (\,) + 9 = 89,$$
$$40x^n - 3 = \pm\sqrt{89}.$$
$$\therefore\ x = \sqrt[n]{\tfrac{3}{40} \pm \tfrac{1}{40}\sqrt{89}}.$$

15.

$$x^4 - 4x^3 - 10x^2 + 28x - 15 = 0.$$

Extract root of left side,

$$x^4 - 4x^3 - 10x^2 + 28x - 15 \,\big|\, x^2 - 2x - 7$$

$$x^4$$

$$2x^2 - 2x \,\big|\, -4x^3 - 10x^2$$
$$\qquad\quad -4x^3 + 10x^2$$

$$2x^2 - 4x - 7 \,\big|\, -14x^2 + 28x - 15$$
$$\qquad\qquad\quad -14x^2 + 28x + 49$$
$$\qquad\qquad\qquad\quad -64$$

Add 64 to both sides to complete the square,

$$x^4 - 4x^3 - 10x^2 + 28x + 49 = 64.$$

Extract the root, $x^2 - 2x - 7 = \pm 8$,

$$x^2 - 2x = 15 \text{ or } -1,$$
$$4x^2 - (\,) + 4 = 64 \text{ or } 0,$$
$$2x - 2 = \pm 8 \text{ or } \pm 0,$$
$$2x = 10, -6, 2, 2.$$
$$\therefore\ x = 5, -3, 1, 1.$$

16.

$$x^4 - 2x^3 - 13x^2 + 14x = -24.$$

Extract root of left side,

$$x^4 - 2x^3 - 13x^2 + 14x + 24 \,|\, \underline{x^2 - x - 7}$$

$$\begin{array}{r|l} x^4 & \\ \hline 2x^2 - 4 & -2x^3 - 13x^2 \\ & -2x^3 + \quad x^2 \\ \hline & -14x^2 + 14x + 24 \\ & -14x^2 + 14x + 49 \\ \hline & \qquad -25 \end{array}$$

Add 25 to both sides to complete the square,

$$x^4 - 2x^3 - 13x^2 + 14x + 49 = 25.$$

Extract the root,

$$x^2 - x - 7 = \pm 5,$$
$$x^2 - x = 12 \text{ or } 2,$$
$$4x^2 - (\,) + 1 = 49 \text{ or } 9,$$
$$2x - 1 = \pm 7 \text{ or } \pm 3.$$
$$\therefore x = 4, -3, 2, -1.$$

17.

$$108x^4 = 20x(9x^2 - 1) - 51x^2 + 7.$$

$$108x^4 - 108x^3 + 51x^2 + 20x = 7.$$

Multiply by 12, and add 16 to both sides,

$$1296x^4 - 2160x^3 + 612x^2 + 240x + 16 = 100.$$

$$1296x^4 - 2160x^3 + 612x^2 + 240x + 16 \,|\, \underline{36x^2 - 30x - 4}$$

$$\begin{array}{r|l} 1296x^4 & \\ \hline 72x^2 - 30x & -2160x^3 + 612x^2 \\ & -2160x^3 + 900x^2 \\ \hline 72x^2 - 60x - 4 & -288x^2 + 240x + 16 \\ & -288x^2 + 240x + 16 \\ \hline \end{array}$$

$$36x^2 - 30x - 4 = \pm 10,$$
$$36x^2 - 30x = 14 \text{ or } -6,$$
$$144x^2 - (\,) + 25 = 81 \text{ or } 1,$$
$$12x - 5 = \pm 9 \text{ or } \pm 1,$$
$$12x = 14, -4, 6, 4.$$
$$\therefore x = 1\tfrac{1}{6}, -\tfrac{1}{3}, \tfrac{1}{2}, \tfrac{1}{3}.$$

18.

$$(x^2 - 1)(x^2 - 2) + (x^2 - 3)(x^2 - 4) = x^4 + 5.$$

Simplify, $x^4 - 3x^2 + 2 + x^4 - 7x^2 + 12 = x^4 + 5.$

Transpose and combine, $x^4 - 10x^2 = -9.$

Complete the square, $x^4 - (\,) + 25 = 16.$

Extract the root,

$$x^2 - 5 = \pm 4,$$
$$x^2 = 9 \text{ or } 1.$$
$$\therefore x = \pm 3 \text{ or } \pm 1.$$

Exercise 99.

1.

$$x^2 - 3x - 6\sqrt{x^2 - 3x - 3} + 2 = 0.$$

Add -3 to both sides,

$$(x^2 - 3x - 3) - 6(x^2 - 3x - 3)^{\frac{1}{2}} = -5,$$

$$(x^2 - 3x - 3) - (\ ) + 9 = 4,$$

$$(x^2 - 3x - 3)^{\frac{1}{2}} - 3 = \pm 2,$$

$$(x^2 - 3x - 3)^{\frac{1}{2}} = 5 \text{ or } 1,$$

$$x^2 - 3x - 3 = 25 \text{ or } 1,$$

$$x^2 - 3x = 28 \text{ or } 4,$$

$$4x^2 - (\ ) + 9 = 121 \text{ or } 25,$$

$$2x - 3 = \pm 11 \text{ or } \pm 5,$$

$$2x = 14, -8, 8, -2.$$

$$\therefore x = 7, -4, 4, -1.$$

2.

$$x^2+3x-\frac{3}{x}+\frac{1}{x^2}=\frac{7}{36},$$

$$\left(x^2+\frac{1}{x^2}\right)+\left(3x-\frac{3}{x}\right)=\frac{7}{36}.$$

Subtract 2 from $\left(x^2+\frac{1}{x^2}\right)$, and from $\frac{7}{36}$.

Since $$\left(x^2-2+\frac{1}{x^2}\right)=\left(x-\frac{1}{x}\right)^2,$$

$$\left(x-\frac{1}{x}\right)^2+3\left(x-\frac{1}{x}\right)=-\frac{65}{36},$$

$$4\left(x-\frac{1}{x}\right)^2+(\ )+9=\frac{16}{9},$$

$$2\left(x-\frac{1}{x}\right)+3=\pm\frac{4}{3},$$

$$2x-\frac{2}{x}=-\frac{5}{3}\text{ or }-\frac{13}{3},$$

$$6x^2-6=-5x\text{ or }-13x,$$

$$6x^2+5x=6,$$

$$144x^2+(\ )+25=169,$$

$$12x+5=\pm 13.$$

$$\therefore x=\tfrac{2}{3}\text{ or }-1\tfrac{1}{2}.$$

From $$6x^2-6=-13x,$$

$$6x^2+13x=6,$$

$$144x^2+(\ )+169=313,$$

$$12x+13=\pm\sqrt{313}.$$

$$\therefore x=\tfrac{1}{12}(-13\pm\sqrt{313}).$$

3.

$$(2x^2-3x)^2-2(2x^2-3x)=15.$$

$$(2x^2-3x)^2-(\ )+1=16,$$

$$(2x^2-3x)-1=\pm 4,$$

$$2x^2-3x=5\text{ or }-3,$$

$$16x^2-(\ )+9=49\text{ or }-15,$$

$$4x-3=\pm 7\text{ or }\pm\sqrt{-15},$$

$$4x=10,\ -4,\ 3\pm\sqrt{-15}.$$

$$\therefore x=2\tfrac{1}{2},\ -1,\ \tfrac{1}{4}(3\pm\sqrt{-15}).$$

4.

$$(ax-b)^2+4a(ax-b)=\frac{9a^2}{4}$$

$$4(ax-b)^2+16a(ax-b)=9a^2,$$
$$4(ax-b)^2+(\ )+16a^2=25a^2,$$
$$2(ax-b)+4a=\pm 5a,$$
$$2(ax-b)=a \text{ or } -9a,$$
$$2ax=a+2b \text{ or } 2b-9a.$$
$$\therefore x=\frac{a+2b}{2a} \text{ or } \frac{2b-9a}{2a}$$

5.

$$3(2x^2-x)-(2x^2-x)^{\frac{1}{2}}=2.$$

$$36(2x^2-x)-(\ )+1=25,$$
$$6(2x^2-x)^{\frac{1}{2}}-1=\pm 5,$$
$$6(2x^2-x)^{\frac{1}{2}}=6 \text{ or } -4,$$
$$(2x^2-x)^{\frac{1}{2}}=1 \text{ or } -\tfrac{2}{3},$$
$$2x^2-x=1 \text{ or } \tfrac{4}{9},$$
$$16x^2-8x=8 \text{ or } \tfrac{32}{9},$$
$$16x^2-(\ )+1=9 \text{ or } \tfrac{41}{9},$$
$$4x-1=\pm 3 \text{ or } \pm\tfrac{1}{3}\sqrt{41}.$$
$$\therefore x=1, -\tfrac{1}{2}, \tfrac{1}{4}(1\pm\tfrac{1}{3}\sqrt{41}).$$

6.

$$15x-3x^2+4(x^2-5x+5)^{\frac{1}{2}}=16.$$

Change signs and add 15 to both sides,

$$(3x^2-15x+15)-4(x^2-5x+5)^{\frac{1}{2}}=-1,$$
$$3(x^2-5x+5)-4(x^2-5x+5)^{\frac{1}{2}}=-1,$$
$$36(x^2-5x+5)-(\ )+16=4,$$
$$6(x^2-5x+5)^{\frac{1}{2}}=6 \text{ or } 2,$$
$$(x^2-5x+5)^{\frac{1}{2}}=1 \text{ or } \tfrac{1}{3},$$
$$x^2-5x+5=1 \text{ or } \tfrac{1}{9},$$
$$x^2-5x=-4 \text{ or } -4\tfrac{8}{9},$$
$$4x^2-(\ )+25=9 \text{ or } \tfrac{49}{9},$$
$$2x-5=\pm 3 \text{ or } \pm\tfrac{7}{3}.$$
$$\therefore x=4,\ 1,\ 3\tfrac{2}{3},\ 1\tfrac{1}{3}.$$

7.

$$x^2 + x^{-2} + x + x^{-1} = 4.$$

$$\left(x^2 + \frac{1}{x^2}\right) + \left(x + \frac{1}{x}\right) = 4,$$

$$\left(x + \frac{1}{x}\right)^2 + \left(x + \frac{1}{x}\right) = 6,$$

$$4\left(x + \frac{1}{x}\right)^2 + 4\left(x + \frac{1}{x}\right) = 24,$$

$$4\left(x + \frac{1}{x}\right)^2 + (\,) + 1 = 25.$$

Extract the root, $2\left(x + \frac{1}{x}\right) = 4 \text{ or } -6,$

$$x + \frac{1}{x} = 2 \text{ or } -3,$$

$$x^2 + 1 = 2x \text{ or } -3x.$$

For first value, $x^2 + 1 = 2x,$

$$x^2 - 2x = -1,$$

$$x^2 - 2x + 1 = 0,$$

$$x - 1 = 0.$$

$$\therefore x = 1.$$

For second value, $x^2 + 1 = -3x,$

$$x^2 + 3x = -1,$$

$$4x^2 + (\,) + 9 = 5,$$

$$2x + 3 = \pm\sqrt{5}.$$

$$\therefore x = \tfrac{1}{2}(-3 \pm \sqrt{5}).$$

8.

$$x^2 + \sqrt{x^2 - 7} = 19.$$

Subtract 7 from each side,

$$(x^2 - 7) + (x^2 - 7)^{\frac{1}{2}} = 12,$$

$$4(x^2 - 7) + (\,) + 1 = 49,$$

$$2(x^2 - 7)^{\frac{1}{2}} + 1 = \pm 7,$$

$$2(x^2 - 7)^{\frac{1}{2}} = 6 \text{ or } -8,$$

$$(x^2 - 7)^{\frac{1}{2}} = 3 \text{ or } -4,$$

$$x^2 - 7 = 9 \text{ or } 16,$$

$$x^2 = 16 \text{ or } 23.$$

$$\therefore x = \pm 4 \text{ or } \pm\sqrt{23}.$$

9.

$$x^2+x+\tfrac{1}{6}(x^2+x)^{\frac{1}{2}}=\tfrac{7}{6}.$$
$$6(x^2+x)+(x^2+x)^{\frac{1}{2}}=7,$$
$$144(x^2+x)+(\ )+1=169,$$
$$12(x^2+x)^{\frac{1}{2}}+1=\pm 13,$$
$$(x^2+x)^{\frac{1}{2}}=1 \text{ or } -\tfrac{7}{6},$$
$$(x^2+x)=1 \text{ or } \tfrac{49}{36},$$
$$4x^2+4x+1=5 \text{ or } \tfrac{253}{36},$$
$$2x+1=\pm\sqrt{5} \text{ or } \pm\tfrac{1}{6}\sqrt{58}.$$
$$\therefore x=\tfrac{1}{2}(-1\pm\sqrt{5}) \text{ or } \tfrac{1}{12}(-1\pm\tfrac{1}{6}\sqrt{58}).$$

10.

$$(x+1)^{\frac{1}{2}}+(x-1)^{\frac{1}{2}}=5.$$

Squaring,
$$x+1+2(x^2-1)^{\frac{1}{2}}+x-1=25,$$
$$2(x^2-1)^{\frac{1}{2}}=25-2x,$$
$$4x^2-4=625-100x+4x^2,$$
$$100x=629.$$
$$\therefore x=6\tfrac{29}{100}.$$

11.

$$x-1=2+2x^{-\frac{1}{2}}.$$
$$x-1=2+\frac{2}{x^{\frac{1}{2}}},$$
$$x-\frac{2}{x^{\frac{1}{2}}}=3,$$
$$x^{\frac{3}{2}}-2=3x^{\frac{1}{2}},$$
$$x^{\frac{3}{2}}-3x^{\frac{1}{2}}=2.$$

Squaring,
$$x^3-6x^2+9x=4,$$
$$x^3-6x^2+9x-4=0,$$
$$(x-1)(x^2-5x+4)=0.$$
$$\therefore (x-1) \text{ or } (x^2-5x+4)=0.$$

If
$$(x-1)=0,$$
$$x=1.$$

If
$$x^2-5x+4=0,$$
$$x^2-5x=-4,$$
$$4x^2-20x=-16,$$
$$4x^2-20x+25=9,$$
$$2x-5=\pm 3,$$
$$2x=8 \text{ or } 2.$$
$$\therefore x=4 \text{ or } 1.$$

12.

$$\sqrt{3x+5}-\sqrt{3x-5}=4.$$

$$\sqrt{3x+5}=\sqrt{3x-5}+4,$$

$$(3x+5)=(3x-5)+8\sqrt{3x-5}+16,$$

$$6=8\sqrt{3x-5},$$

$$36=192x-320,$$

$$-192x=-356.$$

$$\therefore x=1\tfrac{4}{48}.$$

13.

$$(x^4+1)-x(x^2+1)=-2x^2.$$

Transpose,
$$x^4+2x^2+1-x(x^2+1)=0,$$

$$(x^2+1)^2-x(x^2+1)=0.$$

Multiply by 4, and complete the square,

$$(x^2+1)^2-(\ )+x^2=x^2.$$

Extract the root,
$$2(x^2+1)-x=\pm x,$$

$$2x^2+2=2x \text{ or } 0.$$

For first value,
$$2x^2-2x=-2.$$

Multiply by 2, and complete the square,

$$4x^2-(\ )+1=-3.$$

Extract the root,
$$2x-1=\pm\sqrt{-3}.$$

$$\therefore x=\tfrac{1}{2}(1\pm\sqrt{-3}).$$

For second value,
$$2x^2=-2,$$

$$x^2=-1.$$

$$\therefore x=\pm\sqrt{-1}.$$

14.

$$2x^2-2\sqrt{2x^2-5x}=5(x+3).$$

$$2x^2-5x-2\sqrt{2x^2-5x}=15,$$

$$(2x^2-5x)-2(2x^2-5x)^{\frac{1}{2}}+1=16,$$

$$(2x^2-5x)^{\frac{1}{2}}-1=\pm 4,$$

$$(2x^2-5x)^{\frac{1}{2}}=5 \text{ or } -3,$$

$$2x^2-5x=25 \text{ or } 9,$$

$$16x^2-(\ )+25=225 \text{ or } 97,$$

$$4x-5=\pm 15 \text{ or } \pm\sqrt{97},$$

$$4x=20,\ -10,\ (5+\sqrt{97}),\ (5-\sqrt{97}).$$

$$\therefore x=5,\ -2\tfrac{1}{2},\ \tfrac{1}{4}(5+\sqrt{97}),\ \tfrac{1}{4}(5-\sqrt{97}).$$

15.

$$x + 2 - 4x\sqrt{x+2} = 12x^2.$$

Complete the square,

$$(x+2) - 4x\sqrt{x+2} + 4x^2 = 16x^2,$$
$$\sqrt{x+2} - 2x = \pm 4x,$$
$$\sqrt{x+2} = 6x \text{ or } -2x,$$
$$x + 2 = 36x^2 \text{ or } 4x^2,$$
$$36x^2 - x = 2,$$
$$5184x^2 - 144x = 288,$$
$$5184x^2 - ( ) + 1 = 289,$$
$$72x - 1 = \pm 17,$$
$$72x = 18 \text{ or } -16.$$
$$\therefore x = \tfrac{1}{4} \text{ or } -\tfrac{2}{9}.$$

Also,

$$x + 2 = 4x^2,$$
$$4x^2 - x = 2,$$
$$64x^2 - 16x = 32,$$
$$64x^2 - ( ) + 1 = 33,$$
$$8x - 1 = \pm\sqrt{33}.$$
$$\therefore x = \tfrac{1}{8}(1 \pm \sqrt{33}).$$

16.

$$\sqrt{2x+a} + \sqrt{2x-a} = b.$$
$$2x + a + 2\sqrt{4x^2 - a^2} + 2x - a = b^2,$$
$$2\sqrt{4x^2 - a^2} = b^2 - 4x,$$
$$16x^2 - 4a^2 = b^4 - 8b^2x + 16x^2,$$
$$8b^2x = 4a^2 + b^4.$$
$$\therefore x = \frac{4a^2 + b^4}{8b^2}.$$

17.

$$\sqrt{9x^2 + 21x + 1} - \sqrt{9x^2 + 6x + 1} = 3x.$$
$$9x^2 + 21x + 1 - 2\sqrt{81x^4 + 243x^3 + 144x^2 + 27x + 1} + 9x^2 + 6x + 1 = 9x^2,$$
$$2\sqrt{81x^4 + 243x^3 + 144x^2 + 27x + 1} = 9x^2 + 27x + 2,$$
$$324x^4 + 972x^3 + 576x^2 + 108x + 4 = 81x^4 + 729x^2 + 4 + 486x^3 + 36x^2 + 108x,$$
$$243x^4 + 486x^3 - 189x^2 = 0,$$
$$27x^2(9x^2 + 18x - 7) = 0.$$
$$\therefore x = 0.$$

Or,

$$9x^2 + 18x = 7,$$
$$9x^2 + ( ) + 9 = 16,$$
$$3x + 3 = \pm 4,$$
$$3x = 1 \text{ or } -7.$$
$$\therefore x = \tfrac{1}{3} \text{ or } -2\tfrac{1}{3}.$$

18.

$$x^{\frac{2}{3}} - 4x^{\frac{1}{3}} + x^{-\frac{1}{3}} + 4x^{-\frac{2}{3}} = -\tfrac{7}{4}.$$

$$\left(x^{\frac{2}{3}} + \frac{1}{x^{\frac{1}{3}}}\right) - \left(4x^{\frac{1}{3}} - \frac{4}{x^{\frac{2}{3}}}\right) = -\tfrac{7}{4}.$$

Since $$x^{\frac{2}{3}} - 2 + \frac{1}{x^{\frac{2}{3}}} = \left(x^{\frac{1}{3}} - \frac{1}{x^{\frac{1}{3}}}\right)^2,$$

$$\left(x^{\frac{1}{3}} - \frac{1}{x^{\frac{1}{3}}}\right)^2 - 4\left(x^{\frac{1}{3}} - \frac{1}{x^{\frac{1}{3}}}\right) = -\tfrac{15}{4},$$

$$\left(x^{\frac{1}{3}} - \frac{1}{x^{\frac{1}{3}}}\right)^2 - (\ ) + 4 = \tfrac{1}{4},$$

$$\left(x^{\frac{1}{3}} - \frac{1}{x^{\frac{1}{3}}}\right) - 2 = \pm\tfrac{1}{2},$$

$$\left(x^{\frac{1}{3}} - \frac{1}{x^{\frac{1}{3}}}\right) = 1\tfrac{1}{2} \text{ or } 2\tfrac{1}{2},$$

$$2x^{\frac{1}{3}} - 2 = 3x^{\frac{1}{3}} \text{ or } 5x^{\frac{1}{3}},$$

$$2x^{\frac{1}{3}} - 3x^{\frac{1}{3}} = 2,$$

$$16x^{\frac{1}{3}} - (\ ) + 9 = 25,$$

$$4x^{\frac{1}{3}} - 3 = \pm 5,$$

$$4x^{\frac{1}{3}} = 8 \text{ or } -2,$$

$$x^{\frac{1}{3}} = 2 \text{ or } -\tfrac{1}{2},$$

$$x = 8 \text{ or } -\tfrac{1}{8}.$$

$$\therefore x = \pm 2\sqrt{2} \text{ or } \pm\tfrac{1}{4}\sqrt{-2}.$$

Also, $$2x^{\frac{1}{3}} - 2 = 5x^{\frac{1}{3}}$$

$$2x^{\frac{1}{3}} - 5x^{\frac{1}{3}} = 2,$$

$$16x^{\frac{1}{3}} - (\ ) + 25 = 41,$$

$$4x^{\frac{1}{3}} - 5 = \pm\sqrt{41},$$

$$x^{\frac{1}{3}} = \tfrac{1}{4}(5 \pm \sqrt{41}).$$

$$\therefore x = [\tfrac{1}{4}(5 \pm \sqrt{41})]^3.$$

19.

$$\sqrt{x+1}+\sqrt{x+16}=\sqrt{x+25}.$$
$$x+1+2\sqrt{x^2+17x+16}+x+16=x+25,$$
$$2\sqrt{x^2+17x+16}=8-x,$$
$$4x^2+68x+64=64-16x+x^2,$$
$$3x^2+84x=0,$$
$$x^2+28x=0,$$
$$x(x+28)=0.$$
$$\therefore\ x=0 \text{ or } -28.$$

20.

$$\sqrt{2x+1}-\sqrt{x+4}=\tfrac{1}{3}\sqrt{x-3}.$$
$$2x+1-2\sqrt{2x^2+9x+4}+x+4=\frac{x-3}{9},$$
$$27x+45-18\sqrt{2x^2+9x+4}=x-3,$$
$$18\sqrt{2x^2+9x+4}=26x+48,$$
$$9\sqrt{2x^2+9x+4}=13x+24,$$
$$162x^2+729x+324=169x^2+624x+576,$$
$$-7x^2+105x=252,$$
$$x^2-15x=-36,$$
$$4x^2-(\ )+225=81,$$
$$2x-15=\pm 9.$$
$$\therefore\ x=12 \text{ or } 3.$$

21.

$$\sqrt{x+3}+\sqrt{x+8}=5\sqrt{x}.$$
$$x+3+2\sqrt{x^2+11x+24}+x+8=25x,$$
$$2\sqrt{x^2+11x+24}=23x-11,$$
$$4x^2+44x+96=529x^2-506x+121,$$
$$525x^2-550x=-25,$$
$$21x^2-22x=-1,$$
$$1764x^2-(\ )+484=400,$$
$$42x-22=\pm 20.$$
$$\therefore\ x=1 \text{ or } \tfrac{1}{21}.$$

22.

$$\sqrt{3+x}+\sqrt{x}=\frac{6}{\sqrt{3+x}}.$$

Clear of fractions, $3+x+\sqrt{3x+x^2}=6,$

$$\sqrt{3x+x^2}=3-x,$$
$$3x+x^2=9-6x+x^2,$$
$$9x=9.$$
$$\therefore x=1.$$

23.

$$\sqrt{x^2-1}+6=\frac{16}{\sqrt{x^2-1}}.$$
$$x^2-1+6\sqrt{x^2-1}=16,$$
$$6\sqrt{x^2-1}=17-x^2,$$
$$36x^2-36=289-34x^2+x^4,$$
$$x^4-70x^2=-325,$$
$$x^4-(\ )+(35)^2=900,$$
$$x^2-35=\pm 30,$$
$$x^2=65 \text{ or } 5.$$
$$\therefore x=\pm\sqrt{65} \text{ or } \pm\sqrt{5}.$$

24.

$$\frac{1}{\sqrt{x+1}}+\frac{1}{\sqrt{x-1}}=\frac{2}{\sqrt{x^2-1}}.$$
$$\sqrt{x-1}+\sqrt{x+1}=2,$$
$$\sqrt{x-1}=2-\sqrt{x+1},$$
$$x-1=4-4\sqrt{x+1}+x+1,$$
$$2\sqrt{x+1}=3,$$
$$4x+4=9.$$
$$\therefore x=1\tfrac{1}{4}.$$

25.

$$\frac{\sqrt{x+2a}-\sqrt{x-2a}}{\sqrt{x-2a}+\sqrt{x+2a}}=\frac{x}{2a}.$$
$$2a\sqrt{x+2a}-2a\sqrt{x-2a}=x\sqrt{x-2a}+x\sqrt{x+2a},$$
$$(2a-x)\sqrt{x+2a}=(2a+x)\sqrt{x-2a},$$
$$(4a^2-4ax+x^2)(x+2a)=(4a^2+4ax+x^2)(x-2a)$$
$$x^3-2ax^2-4a^2x+8a^3=x^3+2ax^2-4a^2x-8a^3,$$
$$4ax^2=16a^3.$$
$$\therefore x=\pm 2a.$$

26.

$$\frac{3x+\sqrt{4x-x^2}}{3x-\sqrt{4x-x^2}}=2.$$

$$3x+\sqrt{4x-x^2}=6x-2\sqrt{4x-x^2},$$

$$3\sqrt{4x-x^2}=3x,$$

$$\sqrt{4x-x^2}=x,$$

$$4x-x^2=x^2,$$

$$2x^2-4x=0,$$

$$2x(x-2)=0.$$

$$\therefore x=0 \text{ or } 2.$$

27.

$$\frac{\sqrt{7x^2+4}+2\sqrt{3x-1}}{\sqrt{7x^2+4}-2\sqrt{3x-1}}=7.$$

$$\sqrt{7x^2+4}+2\sqrt{3x-1}=7\sqrt{7x^2+4}-14\sqrt{3x-1},$$

$$16\sqrt{3x-1}=6\sqrt{7x^2+4},$$

$$8\sqrt{3x-1}=3\sqrt{7x^2+4},$$

$$192x-64=63x^2+36,$$

$$63x^2-192x=-100,$$

$$4(63x)^2\quad(\ )+(192)^2=11664,$$

$$126x-192=\pm 108.$$

$$\therefore x=2\tfrac{8}{21} \text{ or } \tfrac{2}{3}.$$

28.

$$\sqrt{(x-a)^2+2ab+b^2}=x-a+b.$$

$$x^2-2ax+a^2+2ab+b^2=x^2+a^2+b^2-2ax-2ab+2bx,$$

$$2bx=4ab,$$

$$2x=4a.$$

$$\therefore x=2a.$$

29.

$$\sqrt{(x+a)^2+2ab+b^2}=b-a-x.$$

$$x^2+2ax+a^2+2ab+b^2=b^2+a^2+x^2-2ab+2ax-2bx,$$

$$2bx=-4ab.$$

$$\therefore x=-2a.$$

30.

$$\sqrt{\frac{x}{4}+3}+\sqrt{\frac{x}{4}-3}=\sqrt{\frac{2x}{3}}.$$

$$\sqrt{3x+36}+\sqrt{3x-36}=\sqrt{8x},$$

$$3x+36+2\sqrt{9x^2-1296}+3x-36=8x,$$

$$2\sqrt{9x^2-1296}=2x,$$

$$\sqrt{9x^2-1296}=x,$$

$$9x^2-1296=x^2,$$

$$x^2=162.$$

$$\therefore x=\pm 9\sqrt{2}.$$

31.

$$4x^{\frac{1}{2}}-3(x^{\frac{1}{2}}+1)(x^{\frac{1}{2}}-2)=x^{\frac{1}{2}}(10-3x^{\frac{1}{2}}).$$

$$4x^{\frac{1}{2}}-3x+3x^{\frac{1}{2}}+6=10x^{\frac{1}{2}}-3x,$$

$$3x^{\frac{1}{2}}=6,$$

$$9x=36.$$

$$\therefore x=4.$$

32.

$$(x^{\frac{1}{3}}-2)(x^{\frac{1}{3}}-4)=x^{\frac{2}{3}}(x^{\frac{2}{3}}-1)^2-12.$$

$$x^{\frac{2}{3}}-2x^{\frac{1}{3}}-4x^{\frac{1}{3}}+8=x^{\frac{4}{3}}-2x^{\frac{2}{3}}+x^{\frac{2}{3}}-12,$$

$$5x^{\frac{1}{3}}=20,$$

$$x^{\frac{1}{3}}=4.$$

Raise to third power, $x^2=64.$

$$\therefore x=\pm 8.$$

Exercise 100.

1. The sum of the squares of three consecutive numbers is 365. Find the numbers.

Let x = first number,

$x + 1$ = second number,

and $x + 2$ = third number.

$\therefore x^2 + x^2 + 2x + 1 + x^2 + 4x + 4 = 365,$

$3x^2 + 6x = 360,$

$x^2 + 2x = 120,$

$x^2 + (\ ) + 1 = 121,$

$x + 1 = \pm 11.$

$\therefore x = 10 \text{ or } -12.$

Hence, the numbers are 10, 11, 12.

2. Three times the product of two consecutive numbers exceeds four times their sum by 8. Find the numbers.

Let x = first number,

and $x + 1$ = second number.

$3x^2 + 3x$ = three times product,

$8x + 4$ = four times sum.

$\therefore 3x^2 + 3x - (8x + 4) = 8,$

$3x^2 - 5x = 12,$

$36x^2 - (\ ) + 25 = 169,$

$6x - 5 = \pm 13,$

$6x = 18 \text{ or } -8.$

$\therefore x = 3 \text{ or } -\frac{4}{3}.$

Hence, the numbers are 3, 4.

3. The product of three consecutive numbers is equal to three times the middle number. Find the numbers.

Let x = first number.

Then $x + 1$ = second number,

and $x + 2$ = third number.

$\therefore x(x + 1)(x + 2) = 3(x + 1),$

$x^3 + 3x^2 + 2x = 3x + 3,$

$x^3 + 3x^2 - x - 3 = 0,$

$(x + 1)(x - 1)(x + 3) = 0.$

$\therefore x = 1, -1, -3.$

Hence, the numbers are 1, 2, 3.

4. A boy bought a number of apples for 16 cents. Had he bought 4 more for the same money he would have paid $\frac{1}{3}$ of a cent less for each apple. How many did he buy?

Let x = number of apples bought.

Then $\frac{16}{x}$ = number of cents one apple costs,

and $\frac{16}{x+4}$ = number of cents one apple costs when he gets four more.

$$\therefore \frac{16}{x} - \frac{16}{x+4} = \frac{1}{3},$$

$$48x + 192 - 48x = x^2 + 4x,$$

$$x^2 + 4x = 192,$$

$$x^2 + (\ ) + 4 = 196,$$

$$x + 2 = \pm 14.$$

$$\therefore x = 12 \text{ or } -16.$$

Hence, 12 = number of apples bought.

5. For building 108 rods of stone-wall, 6 days less would have been required if 3 rods more a day had been built. How many rods a day were built?

Let x = number of rods built in a day,

$\frac{108}{x}$ = number of days in which the whole wall was built,

$\frac{108}{x+3}$ = number of days it would have taken to build the whole wall if 3 rods more a day had been built.

Then $$\frac{108}{x} - \frac{108}{x+3} = 6.$$

$$108x + 324 - 108x = 6x^2 + 18x,$$

$$6x^2 + 18x = 324,$$

$$x^2 + 3x = 54,$$

$$4x^2 + (\ ) + 9 = 225,$$

$$2x + 3 = \pm 15,$$

$$2x = 12 \text{ or } -18.$$

$$\therefore x = 6 \text{ or } -9.$$

Hence, 6 = number of rods built in a day.

6. A merchant bought some pieces of silk for $900. Had he bought three pieces more for the same money, he would have paid $15 less for each piece. How many did he buy?

Let x = number of pieces bought.

Then $\frac{900}{x}$ = number of dollars each piece cost,

and $\frac{900}{x+3}$ = number of dollars each piece would have cost if he had received three more for $900.

Then $$\frac{900}{x} - \frac{900}{x+3} = 15,$$

$$900x + 2700 - 900x = 15x^2 + 45x,$$

$$15x^2 + 45x = 2700,$$

$$x^2 + 3x = 180,$$

$$4x^2 + (\ ) + 9 = 729,$$

$$2x + 3 = \pm 27.$$

$$\therefore x = 12 \text{ or } -15.$$

Hence, 12 = number of pieces bought.

7. A merchant bought some pieces of cloth for $168.75. He sold the cloth for $12 a piece, and gained as much as 1 piece cost him. How much did he pay for each piece?

Let x = number of pieces,

$12x$ = number of dollars received for all,

$\frac{168.75}{x}$ = number of dollars paid for one piece.

Then $12x - 168.75$ = number of dollars gained.

$$\therefore 12x - 168.75 = \frac{168.75}{x},$$

$$12x^2 - 168.75x = 168.75.$$

Multiply by $\frac{4}{3}$, $16x^2 - 225x = 225,$

$$1024x^2 - (\ ) + (225)^2 = 65025,$$

$$32x - 225 = \pm 255,$$

$$32x = 480 \text{ or } -30.$$

$$\therefore x = 15 \text{ or } -\frac{15}{16},$$

and $$\frac{168.75}{15} = 11.25.$$

Hence, one piece cost $11.25.

8. Find the price of eggs per score when 10 more in $62\frac{1}{2}$ cents' worth lowers the price $31\frac{1}{4}$ cents per hundred.

Let x = number of eggs at $62\frac{1}{2}$ cents.

Then $\frac{62.5}{x}$ = cost of one egg in cents,

and $\frac{62.5}{x+10}$ = cost of one egg in cents, if he had received ten more.

$$\therefore \frac{6250}{x} - \frac{6250}{x+10} = \text{difference in price per hundred.}$$

$$\therefore \frac{6250}{x} - \frac{6250}{x+10} = \frac{125}{4}.$$

Divide by 125, $\frac{50}{x} - \frac{50}{x+10} = \frac{1}{4}$,

$$200x + 2000 - 200x = x^2 + 10x,$$
$$x^2 + 10x = 2000,$$
$$x^2 + (\ ) + 25 = 2025,$$
$$x + 5 = \pm 45.$$
$$\therefore x = 40.$$

Hence, one egg cost $\frac{62.5}{40}$ cents, and 20 eggs cost $\frac{62.5}{40} \times 20 = 31\frac{1}{4}$ cents.

9. The area of a square may be doubled by increasing its length by 6 inches and its breadth by 4 inches. Determine its side.

Let x = the side of the square.

$$(x+4)(x+6) = 2x^2,$$
$$x^2 + 10x + 24 = 2x^2,$$
$$x^2 - 10x = 24,$$
$$x^2 - (\ ) + 25 = 49,$$
$$x - 5 = \pm 7.$$
$$\therefore x = 12 \text{ or } -2.$$

Hence, the side of the square is 12 inches.

10. The length of a rectangular field exceeds the breadth by 1 yard, and the area is 3 acres. Determine its dimensions.

Let x = number of yards in breadth,

$x + 1$ = number of yards in length,

and $x(x+1)$ = number of square yards in area.

But area is 3 A, or 14,520 square yards.

$$\therefore x^2 + x = 14{,}520.$$
$$4x^2 + (\ ) + 1 = 58{,}081,$$
$$2x + 1 = \pm 241.$$
$$\therefore x = 120 \text{ or } -121.$$

Hence, the field is 121 yards long by 120 broad.

11. There are three lines of which two are each $\frac{4}{7}$ of the third, and the sum of the squares described on them is equal to a square yard. Determine the lengths of the lines in inches.

Let x = number of inches in third line,

and $\frac{4x}{7}$ = number of inches in each of the others.

Then $x^2 + \frac{16x^2}{49} + \frac{16x^2}{49}$ = the sum of the squares.

1 square yard = 1296 square inches.

$$\therefore x^2 + \frac{16x^2}{49} + \frac{16x^2}{49} = 1296,$$

$$\frac{81x^2}{49} = 1296,$$

$$\frac{9x}{7} = \pm 36.$$

$$\therefore x = \pm 28.$$

Hence, the lengths are 16, 16, and 28 inches.

12. A grass plot 9 yards long and 6 yards broad has a path round it. The area of the path is equal to that of the plot. Determine the width of the path.

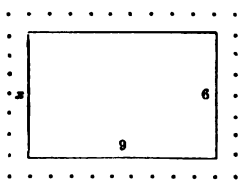

Let x = number of yards in width of path.

Then $(9+2x)2+6\times 2$ = entire length of path in yards.

Also, $[(9+2x)2+6\times 2]x$

or $(30+4x)x$ = area of path in square yards,

and 9×6 = area of grass plot in square yards.

But area of path equals area of grass plot.

$$\therefore (30+4x)x = 54.$$

$$4x^2 + 30x = 54,$$

$$16x^2 + (\ ) + 225 = 441,$$

$$4x + 15 = \pm 21.$$

$$\therefore x = 1\tfrac{1}{2} \text{ or } -9.$$

Hence, the width of the path is $1\frac{1}{2}$ yards.

13. Find the radius of a circle the area of which would be doubled by increasing its radius by 1 inch.

Let x = radius of circle,

and $x + 1$ = radius increased.

The ratio of the circles is the same as the ratio of the squares on the radii.

$$\therefore 2x^2 = x^2 + 2x + 1,$$
$$x^2 - 2x = 1,$$
$$x^2 - (\ ) + 1 = 2,$$
$$x - 1 = \pm\sqrt{2},$$
$$x = 1 \pm \sqrt{2},$$
$$x = 2.4142.$$

14. Divide a line 20 inches long into two parts so that the rectangle contained by the whole and one part may be equal to the square on the other part.

Let x = one part.

Then $20 - x$ = the other part.

$$\therefore 20(20-x) = x^2,$$
$$400 - 20x = x^2,$$
$$x^2 + 20x = 400,$$
$$x^2 + (\ ) + (10)^2 = 500,$$
$$x + 10 = \pm\sqrt{500},$$
$$x = -10 \pm 22.36,$$
$$x = 12.36.$$

Hence, one part is 12.36 inches, and the other is 7.64 inches.

15. A can do some work in 9 hours less time than B can do it, and together they can do it in 20 hours. How long will it take each alone to do it?

Let x = number of hours it takes B.

Then $x - 9$ = number of hours it takes A,

and $\frac{1}{x}$ = part B could do in 1 hour.

$\frac{1}{x-9}$ = part A could do in 1 hour.

$$\therefore \frac{1}{x} + \frac{1}{x-9} = \frac{1}{20}.$$
$$20x - 180 + 20x = x^2 - 9x,$$
$$x^2 - 49x = -180,$$
$$4x^2 - (\ ) + (49)^2 = 1681,$$
$$2x - 49 = \pm 41,$$
$$2x = 90 \text{ or } 8.$$
$$\therefore x = 45 \text{ or } 4.$$

Hence, B can do the work in 45 hours and A in 36 hours.

16. A vessel which has two pipes can be filled in 2 hours less time by one than by the other, and by both together in 2 hours 55 minutes. How long will it take each pipe alone to fill the vessel?

Let x = number of hours it takes first pipe,
$x-2$ = number of hours it takes second pipe.
2 hours 55 minutes equals $2\frac{5}{12}$ hours.

$$\therefore \frac{1}{x}+\frac{1}{x-2}=\frac{12}{35}.$$

$$35x-70+35x=12x^2-24x,$$
$$12x^2-94x=-70,$$
$$144x^2-(\ )+(47)^2=1369.$$

Extract the root, $12x-47=\pm 37,$
$$12x=84 \text{ or } 10.$$
$$\therefore x=7 \text{ or } \tfrac{5}{6}.$$

Hence, one pipe will fill it in 7 hours, the other in 5 hours.

17. A vessel which has two pipes can be filled in 2 hours less time by one than by the other, and by both together in 1 hour 52 minutes 30 seconds. How long will it take each pipe alone to fill the vessel?

Let x = number of hours it takes first pipe.
Then $x+2$ = number of hours it takes second pipe.
$\frac{1}{x}$ = part first pipe fills in 1 hour,
and $\frac{1}{x+2}$ = part second pipe fills in 1 hour.
1 hour 52 minutes 30 seconds equals $1\frac{5}{8}$ hours.

$$\therefore \frac{1}{x}+\frac{1}{x+2}=\frac{8}{15}.$$

$$15x+30+15x=8x^2+16x,$$
$$8x^2-14x=30,$$
$$64x^2-112x=240,$$
$$64x^2-(\ )+49=289,$$
$$8x-7=\pm 17,$$
$$8x=24 \text{ or } -10.$$
$$\therefore x=3 \text{ or } -1\tfrac{1}{4}.$$

Hence, one pipe will fill it in 3 hours, the other in 5 hours.

18. An iron bar weighs 36 pounds. If it had been 1 foot longer, each foot would have weighed $\frac{1}{2}$ a pound less. Find the length and the weight per foot.

Let x = number of feet in length.

Then $\frac{36}{x}$ = weight in pounds per foot,

and $\frac{36}{x} - \frac{1}{2}$ = weight per foot if it had been 1 foot longer.

But $\frac{36}{x+1}$ = weight per foot if it had been 1 foot longer.

$$\therefore \frac{36}{x} - \frac{1}{2} = \frac{36}{x+1},$$

$$72x + 72 - x^2 - x = 72x,$$

$$x^2 + x = 72,$$

$$4x^2 + (\ ) + 1 = 289,$$

$$2x + 1 = \pm 17.$$

$$\therefore x = 8 \text{ or } -9,$$

$$\frac{36}{x} = 4\tfrac{1}{2}.$$

Hence, the bar is 8 feet long, and weighs $4\frac{1}{2}$ pounds per foot.

19. A number is expressed by two digits, the unit's digit being the square of the other, and when 54 is added its digits are interchanged. Find the number.

Let x = digit in tens' place,

Then x^2 = digit in units' place,

$10x + x^2$ = number,

and $10x^2 + x$ = number with digits reversed.

$$\therefore 10x + x^2 + 54 = 10x^2 + x,$$

$$-9x^2 + 9x = -54,$$

$$x^2 - x = 6,$$

$$4x^2 - (\ ) + 1 = 25,$$

$$2x - 1 = \pm 5.$$

$$\therefore x = 3.$$

Hence, the number is 39.

20. Divide 35 into two parts so that the sum of the two fractions formed by dividing each part by the other may be $2\frac{1}{12}$.

Let x = one part.

Then $35 - x$ = the other part.

$$\therefore \frac{x}{35-x} + \frac{35-x}{x} = \frac{25}{12},$$

$$12x^2 + 14700 - 840x + 12x^2 = 875x - 25x^2,$$

$$49x^2 - 1715x = -14700,$$

$$x^2 - 35x = -300,$$

$$4x^2 - (\ ) + (35)^2 = 25,$$

$$2x - 35 = \pm 5.$$

$$\therefore x = 20 \text{ or } 15.$$

Hence, the parts are 20 and 15.

21. A boat's crew row 3½ miles down a river and back again in 1 hour 40 minutes. If the current of the river is 2 miles per hour, determine their rate of rowing in still water.

Let x = rate in still water,

$x + 2$ = rate down stream.

1 hour 40 minutes equals $\frac{5}{3}$ hours.

$\frac{3\frac{1}{2}}{x+2}$ = number of hours going down stream,

$\frac{3\frac{1}{2}}{x-2}$ = number of hours going up stream.

$$\therefore \frac{7}{2(x+2)} + \frac{7}{2(x-2)} = \frac{5}{3},$$

$$21x - 42 + 21x + 42 = 10x^2 - 40,$$

$$10x^2 - 42x = 40,$$

$$400x^2 - (\ ) + (42)^2 = 3364,$$

$$20x - 42 = \pm 58,$$

$$20x = 100 \text{ or } -16.$$

$$\therefore x = 5 \text{ or } -\tfrac{4}{5}.$$

Hence, the rate of rowing in still water is 5 miles an hour.

22. A detachment from an army was marching in regular column with 5 men more in depth than in front. On approaching the enemy the front was increased by 845 men, and the whole was thus drawn up in 5 lines. Find the number of men.

Let x = number of men in front,

and $x + 5$ = number of men in depth.

Then $x^2 + 5x$ = number of men in all.

But $x + 845$ = number of men in front,

and 5 = number of men in depth.

Then $5x + 4225$ = number of men in all.

$$\therefore x^2 + 5x = 5x + 4225,$$

$$x^2 = 4225.$$

$$\therefore x = \pm 65.$$

Hence, the whole number of men is 4550.

23. A jockey sold a horse for $144, and gained as much per cent as the horse cost. What did the horse cost?

Let x = number of dollars the horse cost.

Then $\frac{x}{100}$ = gain per cent,

$\frac{x}{100}$ of x = whole gain,

and $x + \frac{x^2}{100}$ = amount received.

$$\therefore x + \frac{x^2}{100} = 144,$$

$$x^2 + 100x = 14400,$$

$$x^2 + (\ ) + 2500 = 16900,$$

$$x + 50 = \pm 130.$$

$$\therefore x = 80 \text{ or } -180.$$

Hence, the horse cost \$80.

24. A merchant expended a certain sum of money in goods, which he sold again for \$24, and lost as much per cent as the goods cost him. How much did he pay for the goods?

Let x = number of dollars paid for goods.

Then $\frac{x}{100}$ = per cent lost,

and $\frac{x}{100}$ of x = whole loss.

$$\therefore x - \frac{x^2}{100} = 24,$$

$$100x - x^2 = 2400,$$

$$x^2 - 100x = -2400,$$

$$x^2 - (\ ) + (50)^2 = 100,$$

$$x - 50 = \pm 10,$$

$$x = 60 \text{ or } 40.$$

Hence, the goods cost either \$60 or \$40.

25. A broker bought a number of bank shares (\$100 each), when they were at a certain rate per cent *discount*, for \$7500; and afterwards when they were at the same rate per cent *premium*, sold all but 60 for \$5000. How many shares did he buy, and at what price?

Let x = number of shares bought,

$\frac{7500}{x}$ = number of dollars each share cost,

and $100 - \frac{7500}{x}$ = number of dollars discount on each share.

Then

$\frac{100 - \frac{7500}{x}}{100}$ or $\frac{100x - 7500}{100x}$ = rate of discount.

Also, $x - 60$ = number of shares sold.

Then $\frac{5000}{x - 60}$ = number of dollars received for each share,

and $\frac{5000}{x - 60} - 100$ = number of dollars premium on each share.

$\frac{\frac{5000}{x - 60} - 100}{100}$ or $\frac{11000 - 100x}{100x - 6000}$ = rate per cent of premium.

But rate per cent discount was equal to rate per cent premium.

$$\therefore \frac{100x - 7500}{100x} = \frac{11000 - 100x}{100x - 6000},$$

$$x^2 - 135x + 4500 = 110x - x^2,$$

$$2x^2 - 245x = -4500,$$

$$16x^2 - (\ ) + (245)^2 = 24025.$$

Extract the root, $4x - 245 = \pm 155,$

$$4x = 400 \text{ or } 90.$$

$$\therefore x = 100 \text{ or } 22\tfrac{1}{2}.$$

Hence, the broker bought 100 shares at 75.

26. The thickness of a rectangular solid is $\frac{2}{3}$ of its width, and its length is equal to the sum of its width and thickness; also, the number of cubic yards in its volume added to the number of linear yards in its edges is $\frac{5}{9}$ of the number of square yards in its surface. Determine its dimensions.

Let $3x$ = number of yards in width,

$2x$ = number of yards in thickness,

and $5x$ = number of yards in length.

$$30x^3 + 40x = \tfrac{5}{9}(62x^2),$$

$$90x^3 - 310x^2 = -120x.$$

Divide by $10x$, $9x^2 - 31x = -12,$

$$9x^2 - (\ ) + (\tfrac{31}{6})^2 = \tfrac{529}{36},$$

$$3x - \tfrac{31}{6} = \pm \tfrac{23}{6},$$

$$3x = 9 \text{ or } \tfrac{4}{3}.$$

$$\therefore x = 3 \text{ or } \tfrac{4}{9}.$$

Hence, the dimensions are $15 \times 9 \times 6$ yards.

27. If a carriage-wheel $16\frac{1}{2}$ feet round took 1 second more to revolve, the rate of the carriage per hour would be $1\frac{7}{8}$ miles less. At what rate is the carriage travelling?

Let x = number of seconds it takes the wheel to revolve,

$\frac{3600}{x}$ = number of revolutions it makes per hour,

$\frac{59400}{x}$ or $16\frac{1}{2} \times \frac{3600}{x}$ = number of feet it goes per hour,

$\frac{59400}{x+1}$ = number of feet it would go, if it took one second more to revolve,

Then $\frac{59400}{x} - \frac{59400}{x+1} = 9900$, number of feet in $1\frac{7}{8}$ miles.

$$59400x + 59400 - 59400x = 9900x^2 + 9900x,$$
$$9900x^2 + 9900x = 59400,$$
$$x^2 + x = 6,$$
$$x^2 + ( ) + \tfrac{1}{4} = \tfrac{25}{4},$$
$$x + \tfrac{1}{2} = \pm \tfrac{5}{2}.$$
$$\therefore x = 2 \text{ or } -3.$$
$$\tfrac{5}{2}\tfrac{9}{2}\tfrac{4}{2}\tfrac{0}{2}\tfrac{0}{2} = 29700.$$

Since 29700 feet equal $5\frac{5}{8}$ miles, the carriage is travelling at the rate of $5\frac{5}{8}$ miles per hour.

Exercise 101.

1.

$x + y = 13$ (1)
$xy = 36$ (2)

Square (1),
$x^2 + 2xy + y^2 = 169$ (3)
(2)$\times 4$ is $4xy = 144$ (4)

Subt., $x^2 - 2xy + y^2 = 25$

Extract root, $x - y = \pm 5$ (5)
Add (1) and (5), $2x = 18$ or 8.
$\therefore x = 9$ or 4.

Subtract (5) from (1),
$2y = 8$ or 18.
$\therefore y = 4$ or 9.

2.

$x + y = 29$ (1)
$xy = 100$ (2)

Square (1),
$x^2 + 2xy + y^2 = 841$ (2)
(2)$\times 4$ is $4xy = 400$ (4)

Subt., $x^2 - 2xy + y^2 = 441$

Extract root, $x - y = \pm 21$ (5)
Add (1) and (5), $2x = 50$ or 8.
$\therefore x = 25$ or 4.

Subtract (5) from (1),
$2y = 8$ or 50.
$\therefore y = 4$ or 25.

3.

$x - y = 19$ (1)
$xy = 66$ (2)

Square (1),
$x^2 - 2xy + y^2 = 361$ (3)
(2)×4 is $4xy = 264$ (4)

Add, $x^2 + 2xy + y^2 = 625$
Extract root, $x + y = \pm 25$ (5)
Add (5) and (1), $2x = 44$ or -6.
$\therefore x = 22$ or -3.
Subtract (1) from (5),
$2y = 6$ or -44.
$\therefore y = 3$ or -22.

4.

$x - y = 45$ (1)
$xy = 250$ (2)

Square (1),
$x^2 - 2xy + y^2 = 2025$ (3)
(2)×4 is $4xy = 1000$ (4)

Add, $x^2 + 2xy + y^2 = 3025$
Extract root, $x + y = \pm 55$ (5)
Add (5) and (1), $2x = 100$ or -10.
$\therefore x = 50$ or -5.
Subtract (1) from (5),
$2y = 10$ or -100.
$\therefore y = 5$ or -50.

5.

$x - y = 10$ (1)
$x^2 + y^2 = 178$ (2)

Square (1),
$x^2 - 2xy + y^2 = 100$ (3)
(2) is $x^2 + y^2 = 178$

Subt., $2xy = 78$ (4)
(2) is $x^2 + y^2 = 178$

Add, $x^2 + 2xy + y^2 = 256$
Extract root, $x + y = \pm 16$ (5)
Add (5) and (1), $2x = 26$ or -6.
$\therefore x = 13$ or -3.
Subtract (1) from (5),
$2y = 6$ or -26.
$\therefore y = 3$ or -13.

6.

$x - y = 14$ (1)
$x^2 + y^2 = 436$ (2)

Square (1),
$x^2 - 2xy + y^2 = 196$ (3)
Subtract (2) from (3),
$-2xy = -240$ (4)
Subtract (4) from (2),
$x^2 + 2xy + y^2 = 676$.
Extract root, $x + y = \pm 26$ (5)
Add (1) and (5), $2x = 40$ or -12.
$\therefore x = 20$ or -6.
Subtract (1) from (5),
$2y = 12$ or -40
$\therefore y = 6$ or -20.

7.

$x + y = 12$ (1)
$x^2 + y^2 = 104$ (2)
Square (1), $x^2 + 2xy + y^2 = 144$ (3)
Subtract (2) from (3), $2xy = 40$ (4)
Subtract (4) from (2), $x^2 - 2xy + y^2 = 64$.
Extract root, $x - y = \pm 8$ (5)
Add (1) and (5), $2x = 20$ or 4.
$\therefore x = 10$ or 2.
Subtract (5) from (1), $2y = 4$ or 20.
$\therefore y = 2$ or 10.

8. $\frac{1}{x}+\frac{1}{y}=\frac{3}{4}$ (1)

$\frac{1}{x^2}+\frac{1}{y^2}=\frac{5}{16}$ (2)

Square (1),

$\frac{1}{x^2}+\frac{2}{xy}+\frac{1}{y^2}=\frac{9}{16}$ (3)

Subtract (2) from (3),

$\frac{2}{xy}=\frac{4}{16}$ (4)

Subtract (4) from (2),

$\frac{1}{x^2}-\frac{2}{xy}+\frac{1}{y^2}=\frac{1}{16}$.

Extract root, $\frac{1}{x}-\frac{1}{y}=\pm\frac{1}{4}$ (5)

Add (1) and (5), $\frac{2}{x}=1$ or $\frac{1}{2}$.

$\therefore x=2$ or 4.

Subtract (5) from (1),

$\frac{2}{y}=\frac{1}{2}$ or 1.

$\therefore y=4$ or 2.

9. $\frac{1}{x}+\frac{1}{y}=5$ (1)

$\frac{1}{x^2}+\frac{1}{y^2}=13$ (2)

Square (1),

$\frac{1}{x^2}+\frac{2}{xy}+\frac{1}{y^2}=25$ (3)

Subtract (2) from (3),

$\frac{2}{xy}=12$ (4)

Subtract (4) from (2),

$\frac{1}{x^2}-\frac{2}{xy}+\frac{1}{y^2}=1$.

Extract root, $\frac{1}{x}-\frac{1}{y}=\pm 1$ (5)

Add (1) and (5), $\frac{2}{x}=6$ or 4.

$\therefore x=\frac{1}{3}$ or $\frac{1}{2}$.

Subtract (5) from (1),

$\frac{2}{y}=4$ or 6.

$\therefore y=\frac{1}{2}$ or $\frac{1}{3}$.

10. $7x^2-8xy=159$ (1)

$5x+2y=7$ (2)

$2y=7-5x$.

$\therefore y=\frac{7-5x}{2}$.

Substitute in (1),

$7x^2-8x\left(\frac{7-5x}{2}\right)=159$,

$14x^2-56x+40x^2=318$,

$54x^2-56x=318$.

Divide by 6,

$9x^2-\frac{28}{3}x=53$.

Complete the square,

$9x^2-(\ )+(\frac{14}{9})^2=\frac{4489}{81}$.

Extract root,

$3x-\frac{14}{9}=\pm\frac{67}{9}$,

$3x=\frac{81}{9}$ or $-\frac{53}{9}$.

$\therefore x=3$ or $-1\frac{26}{27}$.

Substitute value of x in (2).

$\therefore y=-4$ or $8\frac{11}{27}$.

11. $x+y=49$ (1)

$x^2+y^2=1681$ (2)

Square (1),

$x^2+2xy+y^2=2401$ (3)

Subtract (2) from (3),

$2xy=720$ (4)

Subtract (4) from (2),

$x^2-2xy+y^2=961$.

Extract root, $x-y=\pm 31$ (5)

Add (5) and (1), $2x=80$ or 18.

$\therefore x=40$ or 9.

Substitute value of x in (1).

$\therefore y=9$ or 40.

12. $x^2+y^2=341$ (1)
$x+y=11$ (2)

Divide (1) by (2),
$x^2-xy+y^2=31$ (3)
Sq. (2), $x^2+2xy+y^2=121$ (4)
Subt., $-3xy=-90$
$\therefore -xy=-30$ (5)
Add (3) and (5),
$x^2-2xy+y^2=1$.
Extract root, $x-y=\pm 1$ (6)
Add (2) and (6), $2x=12$ or 10.
$\therefore x=6$ or 5.
Subtract (6) from (2),
$2y=10$ or 12.
$\therefore y=5$ or 6.

13. $x^2+y^2=1008$ (1)
$x+y=12$ (2)

Divide (1) by (2),
$x^2-xy+y^2=84$ (3)
Sq. (2), $x^2+2xy+y^2=144$ (4)
Subt., $-3xy=-60$
$\therefore -xy=-20$ (5)
Add (3) and (5),
$x^2-2xy+y^2=64$.
Extract root, $x-y=\pm 8$ (6)
Add (2) and (6), $2x=20$ or 4.
$\therefore x=10$ or 2.
Subtract (6) from (2),
$2y=4$ or 20.
$\therefore y=2$ or 10.

14. $x^2-y^2=98$ (1)
$x-y=2$ (2)

Divide (1) by (2),
$x^2+xy+y^2=49$ (3)
Sq. (2), $x^2-2xy+y^2=4$ (4)
Subt., $3xy=45$
$\therefore xy=15$ (5)
Add (3) and (5),
$x^2+2xy+y^2=64$.
Extract root, $x+y=\pm 8$ (6)
Add (2) and (6), $2x=10$ or -6.
$\therefore x=5$ or -3.
Subtract (2) from (6),
$2y=6$ or -10.
$\therefore y=3$ or -5.

15. $x^2-y^2=279$ (1)
$x-y=3$ (2)

Divide (1) by (2),
$x^2+xy+y^2=93$ (3)
Sq. (2), $x^2-2xy+y^2=9$ (4)
Subt., $3xy=84$
$\therefore xy=28$ (5)
Add (5) and (3),
$x^2+2xy+y^2=121$.
Extract root, $x+y=\pm 11$ (6)
Add (6) and (2), $2x=14$ or -8.
$\therefore x=7$ or -4.
Subtract (2) from (6),
$2y=8$ or -14.
$\therefore y=4$ or -7.

16. $x-3y=1$ (1)
$xy+y^2=5$ (2)

Transpose (1), $x=1+3y$.
Substitute in (2),
$y(1+3y)+y^2=5$,
$y+3y^2+y^2=5$,
$4y^2+y=5$,
$4y^2+(\ )+\frac{1}{16}=5\frac{1}{16}$,
$2y+\frac{1}{4}=\pm\frac{9}{4}$.
$\therefore y=1$ or $-1\frac{1}{2}$.
Substitute value of y in (1),
$x=4$ or $-2\frac{3}{4}$.

17. $4y=5x+1$ (1)
$2xy=33-x^2$ (2)
$y=\frac{5x+1}{4}$.
Substitute value of y in (2),
$\frac{10x^2+2x}{4}=33-x^2$,
$14x^2+2x=132$.
Divide by 2,
$7x^2+x=66$,
$196x^2+(\ )+1=1849$.
Extract root,
$14x+1=\pm 43$,
$14x=42$ or -44.
$\therefore x=3$ or $-3\frac{1}{7}$.
Substitute value of x in (1).
$\therefore y=4$ or $-3\frac{13}{14}$.

18.

$$\frac{1}{x}-\frac{1}{y}=3 \quad (1)$$

$$\frac{1}{x^2}-\frac{1}{y^2}=21 \quad (2)$$

Divide (2) by (1),

$$\frac{1}{x}+\frac{1}{y}=7 \quad (3)$$

Add (3) and (1), $\frac{2}{x}=10.$

$$\therefore x=\tfrac{1}{5}.$$

Subtract (1) from (3),

$$\frac{2}{y}=4.$$

$$\therefore y=\tfrac{1}{2}.$$

19.

$$\frac{1}{x}-\frac{1}{y}=2\tfrac{1}{2} \quad (1)$$

$$\frac{1}{x^2}-\frac{1}{y^2}=8\tfrac{3}{4} \quad (2)$$

Divide (2) by (1),

$$\frac{1}{x}+\frac{1}{y}=\frac{7}{2} \quad (3)$$

Add (1) and (3), $\frac{2}{x}=\frac{12}{2}.$

$$\therefore x=\tfrac{1}{3}.$$

Subtract (1) from (3),

$$\frac{2}{y}=1.$$

$$\therefore y=2.$$

20.

$$x^2-2xy-y^2=1 \quad (1)$$

$$x+y=2 \quad (2)$$

Square (2), $x^2+2xy+y^2=4 \quad (3)$

Add (3) and (1), $2x^2=5,$

$$x^2=2\tfrac{1}{2}.$$

$$\therefore x=\pm\sqrt{2\tfrac{1}{2}}.$$

Substitute value of x in (2), $y=2\mp\sqrt{2\tfrac{1}{2}}.$

EXERCISE 102.

$$x^2+xy+2y^2=74 \quad (1)$$

$$2x^2+2xy+y^2=73 \quad (2)$$

Add, $3x^2+3xy+3y^2=147$

Divide by 3, $x^2+xy+y^2=49 \quad (3)$

Subtract (3) from (1), $y^2=25.$

$$\therefore y=\pm 5.$$

Substitute value of y in (3), $x^2\pm 5x+25=49,$

$$x^2\pm 5x=24,$$

$$4x^2\pm 20x+25=121.$$

Extract the root, $2x\pm 5=\pm 11,$

$$2x=\pm 6 \text{ or } \pm 16.$$

$$\therefore x=\pm 3 \text{ or } \pm 8.$$

2.

$$x^2 + xy + 4y^2 = 6 \quad (1)$$
$$3x^2 + 8y^2 = 14 \quad (2)$$

Substitute vx for y in both equations.

From (1), $x^2 + vx^2 + 4v^2x^2 = 6$.

$$\therefore x^2 = \frac{6}{1 + v + 4v^2} \quad (3)$$

From (2), $3x^2 + 8v^2x^2 = 14$.

$$\therefore x^2 = \frac{14}{3 + 8v^2} \quad (4)$$

Equate values of x^2,

$$\frac{6}{1 + v + 4v^2} = \frac{14}{3 + 8v^2},$$
$$18 + 48v^2 = 14 + 14v + 56v^2,$$
$$8v^2 + 14v = 4 \quad (5)$$
$$64v^2 + (\ ) + 49 = 81,$$
$$8v + 7 = \pm 9,$$
$$8v = 2 \text{ or } -16.$$
$$\therefore v = \tfrac{1}{4} \text{ or } -2.$$

Substitute values of v in (4), $x^2 = \frac{14}{3 + \frac{1}{2}}$ or $\frac{14}{3 + 32}$.

Then $x^2 = 4$ or $\frac{2}{5}$.

$$\therefore x = \pm 2, \pm\sqrt{\tfrac{2}{5}}.$$

From (2), $y = \pm \frac{1}{2}, \pm 2\sqrt{\frac{2}{5}}$.

3.

$$x^2 - xy + y^2 = 21 \quad (1)$$
$$y^2 - 2xy = -15 \quad (2)$$

Substitute vx for y in both equations.

From (1), $x^2 - vx^2 + v^2x^2 = 21$.

$$\therefore x^2 = \frac{21}{1 - v + v^2} \quad (3)$$

From (2), $v^2x^2 - 2vx^2 = -15$.

$$\therefore x^2 = \frac{-15}{v^2 - 2v} \quad (4)$$

Equate values of x^2, $\frac{21}{1 - v + v^2} = \frac{-15}{v^2 - 2v}$ (5)

$$21v^2 - 42v = -15 + 15v - 15v^2,$$
$$36v^2 - 57v = -15,$$
$$5184v^2 - (\ ) + (57)^2 = 1089,$$
$$72v - 57 = \pm 33.$$
$$\therefore v = \tfrac{5}{4} \text{ or } \tfrac{1}{4}.$$

Substitute values of v in (4), $x^2 = 16$ or 27.

$$\therefore x = \pm 4 \text{ or } \pm 3\sqrt{3}.$$
$$\therefore y = \pm 5 \text{ or } \pm \sqrt{3}.$$

4.

$$x^2 - 4y^2 - 9 = 0.$$
$$xy + 2y^2 - 3 = 0.$$
$$x^2 - 4y^2 = 9 \quad (1)$$

Transpose, $xy + 2y^2 = 3 \quad (2)$

Substitute vx for y in both equations.

From (1), $x^2 - 4v^2x^2 = 9.$

$$\therefore x^2 = \frac{9}{1 - 4v^2} \quad (3)$$

From (2), $x^2v + 2x^2v^2 = 3.$

$$\therefore x^2 = \frac{3}{v + 2v^2} \quad (4)$$

Equate values of x^2, $\frac{9}{1-4v^2} = \frac{3}{v+2v^2}$,

$$30v^2 + 9v = 3,$$
$$10v^2 + 3v = 1,$$
$$400v^2 + (\ ) + 9 = 49,$$
$$20v + 3 = \pm 7,$$
$$20v = 4 \text{ or } -10.$$
$$\therefore v = \tfrac{1}{5} \text{ or } -\tfrac{1}{2}.$$

Substitue values of v in (3), $x^2 = \frac{5}{7}$ or ∞.

$$\therefore x = \pm 5\sqrt{\tfrac{3}{7}}.$$
$$\therefore y = \pm\sqrt{\tfrac{3}{7}}.$$

5.

$$x^2 - xy = 35 \quad (1)$$
$$xy + y^2 = 18 \quad (2)$$

Substitute vx for y in both equations.

From (1), $x^2 - vx^2 = 35.$

$$\therefore x^2 = \frac{35}{1 - v} \quad (3)$$

From (2), $vx^2 + v^2x^2 = 18.$

$$\therefore x^2 = \frac{18}{v + v^2} \quad (4)$$

Equate values of x^2, $\frac{35}{1-v} = \frac{18}{v+v^2}$,

$$35v^2 + 53v = 18,$$
$$4900v^2 + (\ ) + (53)^2 = 5329,$$
$$70v + 53 = \pm 73,$$
$$70v = 20 \text{ or } -126.$$
$$\therefore v = \tfrac{2}{7} \text{ or } -\tfrac{9}{5}.$$

Substitute values of v in (3), $x^2 = 49$ or $\frac{25}{2}$.

$$\therefore x = \pm 7 \text{ or } \pm 5\sqrt{\tfrac{1}{2}}.$$
$$\therefore y = \pm 2 \text{ or } \mp 9\sqrt{\tfrac{1}{2}}.$$

6.

$$x^2 + xy + 2y^2 = 44 \quad (1)$$
$$2x^2 - xy + y^2 = 16 \quad (2)$$

Substitute vx for y in both equations.

From (1), $x^2 + vx^2 + 2v^2x^2 = 44.$

$$\therefore x^2 = \frac{44}{1 + v + 2v^2} \quad (3)$$

From (2), $2x^2 - vx^2 + v^2x^2 = 16.$

$$\therefore x^2 = \frac{16}{2 - v + v^2}.$$

Equate values of x^2, $\frac{44}{1 + v + 2v^2} = \frac{16}{2 - v + v^2}$,

$$88 - 44v + 44v^2 = 16 + 16v + 32v^2,$$
$$12v^2 - 60v = -72,$$
$$v^2 - 5v = -6,$$
$$4v^2 - (\ ) + 25 = 1,$$
$$2v - 5 = \pm 1.$$
$$\therefore v = 3 \text{ or } 2.$$

Substitute values of v in (3), $x^2 = 2$ or 4.

From (3). $\therefore x = \pm\sqrt{2}$ or ± 2.

$\therefore y = \pm 3\sqrt{2}$ or ± 4.

7.

$$x^2 + xy = 15 \quad (1)$$
$$xy - y^2 = 2 \quad (2)$$

Substitute vx for y in both equations.

From (1), $x^2 + vx^2 = 15.$

$$\therefore x^2 = \frac{15}{1 + v} \quad (3)$$

From (2), $vx^2 - v^2x^2 = 2.$

$$\therefore x^2 = \frac{2}{v - v^2} \quad (4)$$

Equate values of x^2, $\frac{15}{1 + v} = \frac{2}{v - v^2}$,

$$15v - 15v^2 = 2 + 2v,$$
$$15v^2 - 13v = -2,$$
$$900v^2 - (\ ) + 169 = 49.$$

Extract the root, $30v - 13 = \pm 7,$

$$30v = 20 \text{ or } 6.$$
$$\therefore v = \tfrac{2}{3} \text{ or } \tfrac{1}{5}.$$

Substitute values of v in (3), $x^2 = 9$ or $\frac{15}{2}$.

$$\therefore x = \pm 3 \text{ or } \pm 5\sqrt{\tfrac{1}{2}}.$$
$$\therefore y = \pm 2 \text{ or } \pm\sqrt{\tfrac{1}{2}}.$$

8.

$$x^2 - xy + y^2 = 7 \quad (1)$$

$$3x^2 + 13xy + 8y^2 = 162 \quad (2)$$

Substitute vx for y in both equations.

From (1), $x^2 - vx + v^2x^2 = 7.$

$$\therefore x^2 = \frac{7}{1 - v + v^2} \quad (3)$$

From (2), $3x^2 + 13v + 8v^2x^2 = 162.$

$$\therefore x^2 = \frac{162}{3 + 13v + 8v^2}.$$

Equate values of x^2, $$\frac{7}{1 - v + v^2} = \frac{162}{3 + 13v + 8v^2} \quad (4)$$

$$\therefore 106v^2 - 253v = -141,$$

$$44944v^2 - (\ ) + (253)^2 = 4225.$$

Extract the root, $212v - 253 = \pm 65.$

$$\therefore v = \tfrac{3}{2} \text{ or } \tfrac{47}{53}.$$

Substitute values of v in (3), $x^2 = 4$ or $\frac{2809}{361}$.

$$\therefore x = \pm 2 \text{ or } \pm 2\tfrac{15}{19}.$$

$$\therefore y = \pm 3 \text{ or } \pm 2\tfrac{9}{19}.$$

9.

$$2x^2 + 3xy + y^2 = 70 \quad (1)$$

$$6x^2 + xy - y^2 = 50 \quad (2)$$

Substitute vx for y in both equations.

From (1), $2x^2 + 3vx^2 + v^2x^2 = 70.$

$$\therefore x^2 = \frac{70}{2 + 3v + v^2} \quad (3)$$

From (2), $6x^2 + vx^2 - v^2x^2 = 50.$

$$\therefore x^2 = \frac{50}{6 + v - v^2} \quad (4)$$

Equate values of x^2, $$\frac{70}{2 + 3v + v^2} = \frac{50}{6 + v - v^2},$$

$$420 + 70v - 70v^2 = 100 + 150v + 50v^2,$$

$$12v^2 + 8v = 32,$$

$$36v^2 + (\ ) + (2)^2 = 100,$$

$$6v + 2 = \pm 10.$$

$$\therefore v = 1\tfrac{1}{3} \text{ or } -2.$$

Substitute value of v in (3), $x^2 = 9$ or ∞.

$$\therefore x = \pm 3.$$

$$\therefore y = \pm 4.$$

10.

$$x^2 - xy - y^2 = 5 \quad (1)$$

$$2x^2 + 3xy + y^2 = 28 \quad (2)$$

Substitute vx for y in both equations.

From (1), $x^2 - vx^2 - v^2x^2 = 5.$

$$\therefore x^2 = \frac{5}{1 - v - v^2} \quad (3)$$

From (2), $2x^2 + 3vx^2 + v^2x^2 = 28.$

$$\therefore x^2 = \frac{28}{2 + 3v + v^2}.$$

Equate values of x^2, $\frac{5}{1 - v - v^2} = \frac{28}{2 + 3v + v^2}$ (4)

$$10 + 15v + 5v^2 = 28 - 28v - 28v^2,$$

$$33v^2 + 43v = 18,$$

$$4356v^2 + (\ ) + (43)^2 = 4225,$$

$$66v + 43 = \pm 65.$$

$$\therefore v = \tfrac{1}{3} \text{ or } -\tfrac{18}{11}.$$

Substitute values of v in (3), $x^2 = 9$ or -121.

$$\therefore x = \pm 3 \text{ or } \pm 11\sqrt{-1}.$$

$$\therefore y = \pm 1 \text{ or } \mp 18\sqrt{-1}.$$

11.

$$4xy = 96 - x^2y^2 \quad (1)$$

$$x + y = 6 \quad (2)$$

Let $x = (u + v)$,

and $y = (u - v)$.

From (2), $u + v + u - v = 6,$

$$2u = 6,$$

$$u = 3.$$

From (1), $4(u^2 - v^2) = 96 - u^4 + 2u^2v^2 - v^4,$

$$4u^2 - 4v^2 = 96 - u^4 + 2u^2v^2 - v^4.$$

Substitute value of u, $v^4 - 22v^2 = -21,$

$$4v^2 - (\ ) + (22)^2 = 400,$$

$$2v^2 - 22 = \pm 20,$$

$$2v^2 = 22 \pm 20,$$

$$v^2 = 21 \text{ or } 1.$$

$$\therefore v = \pm\sqrt{21} \text{ or } \pm 1.$$

$$\therefore x = u + v = 3 \pm \sqrt{21},\ 4,\ 2,$$

and $y = u - v = 3 \mp \sqrt{21},\ 2,\ 4.$

12.

$$x^2 + y^2 = 18 - x - y \quad (1)$$
$$xy = 6 \quad (2)$$

Put $u + v$ for x, and $u - v$ for y.

(1) becomes $(u+v)^2 + (u-v)^2 = 18 - 2u$,

$$2u^2 + 2v^2 + 2u = 18,$$
$$u^2 + v^2 + u = 9 \quad (3)$$

(2) becomes $(u+v)(u-v) = 6$,

or $$u^2 - v^2 = 6 \quad (4)$$

Add (3) and (4), $2u^2 + u = 15$.

Complete the square, $16u^2 + (\ ) + 1 = 121$,

$$4u + 1 = \pm 11.$$
$$\therefore u = 2\tfrac{1}{2} \text{ or } -3.$$

Substitute value of u in (4), $-v^2 = 6 - \frac{25}{4}$ or $6 - 9$.

$$\therefore v = \pm \tfrac{1}{2} \text{ or } \pm\sqrt{3}.$$
$$\therefore x = u + v = 3,\ 2, \text{ or } -3 \pm \sqrt{3},$$
and $y = u - v = 2,\ 3, \text{ or } -3 \mp \sqrt{3}.$

13.

$$2(x^2 + y^2) = 5xy \quad (1)$$
$$4(x - y) = xy \quad (2)$$

Put $u + v$ for x, and $u - v$ for y,

$$2(2u^2 + 2v^2) = 5(u^2 - v^2) \quad (3)$$
$$4(2v) = u^2 - v^2 \quad (4)$$

Transpose and combine, $9v^2 - u^2 = 0$ (5)

$$+ u^2 - v^2 = 8v \quad (6)$$

Add (5) and (6), $8v^2 = 8v$

$$8v^2 - 8v = 0.$$
$$\therefore v = 0 \text{ or } 1.$$

Substitute value of v in (6), $u^2 = 8v + v^2$,

$$u^2 = 0 \text{ or } 9,$$
$$u = 0 \text{ or } \pm 3.$$
$$\therefore x = u + v = 0,\ 4,\ -2.$$
and $y = u - v = 0,\ 2,\ -4.$

3.

$$x - y = 19 \quad (1)$$
$$xy = 66 \quad (2)$$

Square (1),

$$x^2 - 2xy + y^2 = 361 \quad (3)$$

(2)×4 is $\quad 4xy = 264 \quad (4)$

Add, $x^2 + 2xy + y^2 = 625$

Extract root, $x + y = \pm 25 \quad (5)$

Add (5) and (1), $2x = 44$ or -6.

$\therefore x = 22$ or -3.

Subtract (1) from (5),

$2y = 6$ or -44.

$\therefore y = 3$ or -22.

4.

$$x - y = 45 \quad (1)$$
$$xy = 250 \quad (2)$$

Square (1),

$$x^2 - 2xy + y^2 = 2025 \quad (3)$$

(2)×4 is $\quad 4xy = 1000 \quad (4)$

Add, $x^2 + 2xy + y^2 = 3025$

Extract root, $x + y = \pm 55 \quad (5)$

Add (5) and (1), $2x = 100$ or -10.

$\therefore x = 50$ or -5.

Subtract (1) from (5),

$2y = 10$ or -100.

$\therefore y = 5$ or -50.

5.

$$x - y = 10 \quad (1)$$
$$x^2 + y^2 = 178 \quad (2)$$

Square (1),

$$x^2 - 2xy + y^2 = 100 \quad (3)$$

(2) is $\quad x^2 + y^2 = 178$

Subt., $\quad 2xy = 78 \quad (4)$

(2) is $\quad x^2 + y^2 = 178$

Add, $x^2 + 2xy + y^2 = 256$

Extract root, $x + y = \pm 16 \quad (5)$

Add (5) and (1), $2x = 26$ or -6.

$\therefore x = 13$ or -3.

Subtract (1) from (5),

$2y = 6$ or -26.

$\therefore y = 3$ or -13.

6.

$$x - y = 14 \quad (1)$$
$$x^2 + y^2 = 436 \quad (2)$$

Square (1),

$$x^2 - 2xy + y^2 = 196 \quad (3)$$

Subtract (2) from (3),

$$-2xy = -240 \quad (4)$$

Subtract (4) from (2),

$x^2 + 2xy + y^2 = 676$.

Extract root, $x + y = \pm 26 \quad (5)$

Add (1) and (5), $2x = 40$ or -12.

$\therefore x = 20$ or -6.

Subtract (1) from (5),

$2y = 12$ or -40

$\therefore y = 6$ or -20.

7.

$$x + y = 12 \quad (1)$$
$$x^2 + y^2 = 104 \quad (2)$$

Square (1), $\quad x^2 + 2xy + y^2 = 144 \quad (3)$

Subtract (2) from (3), $\quad 2xy = 40 \quad (4)$

Subtract (4) from (2), $\quad x^2 - 2xy + y^2 = 64$.

Extract root, $\quad x - y = \pm 8 \quad (5)$

Add (1) and (5), $\quad 2x = 20$ or 4.

$\therefore x = 10$ or 2.

Subtract (5) from (1), $\quad 2y = 4$ or 20.

$\therefore y = 2$ or 10.

8. $\frac{1}{x}+\frac{1}{y}=\frac{3}{4}$ (1)

$\frac{1}{x^2}+\frac{1}{y^2}=\frac{5}{16}$ (2)

Square (1),

$\frac{1}{x^2}+\frac{2}{xy}+\frac{1}{y^2}=\frac{9}{16}$ (3)

Subtract (2) from (3),

$\frac{2}{xy}=\frac{4}{16}$ (4)

Subtract (4) from (2),

$\frac{1}{x^2}-\frac{2}{xy}+\frac{1}{y^2}=\frac{1}{16}$.

Extract root, $\frac{1}{x}-\frac{1}{y}=\pm\frac{1}{4}$ (5)

Add (1) and (5), $\frac{2}{x}=1$ or $\frac{1}{2}$.

$\therefore x=2$ or 4.

Subtract (5) from (1),

$\frac{2}{y}=\frac{1}{2}$ or 1.

$\therefore y=4$ or 2.

9. $\frac{1}{x}+\frac{1}{y}=5$ (1)

$\frac{1}{x^2}+\frac{1}{y^2}=13$ (2)

Square (1),

$\frac{1}{x^2}+\frac{2}{xy}+\frac{1}{y^2}=25$ (3)

Subtract (2) from (3),

$\frac{2}{xy}=12$ (4)

Subtract (4) from (2),

$\frac{1}{x^2}-\frac{2}{xy}+\frac{1}{y^2}=1$.

Extract root, $\frac{1}{x}-\frac{1}{y}=\pm 1$ (5)

Add (1) and (5), $\frac{2}{x}=6$ or 4.

$\therefore x=\frac{1}{3}$ or $\frac{1}{2}$.

Subtract (5) from (1),

$\frac{2}{y}=4$ or 6.

$\therefore y=\frac{1}{2}$ or $\frac{1}{3}$.

10. $7x^2-8xy=159$ (1)

$5x+2y=7$ (2)

$2y=7-5x$.

$\therefore y=\frac{7-5x}{2}$.

Substitute in (1),

$7x^2-8x\left(\frac{7-5x}{2}\right)=159$,

$14x^2-56x+40x^2=318$,

$54x^2-56x=318$.

Divide by 6,

$9x^2-\frac{28}{3}x=53$.

Complete the square,

$9x^2-(\ )+(\frac{14}{9})^2=\frac{4428}{81}$.

Extract root,

$3x-\frac{14}{9}=\pm\frac{67}{9}$,

$3x=\frac{81}{9}$ or $-\frac{53}{9}$.

$\therefore x=3$ or $-1\frac{26}{27}$.

Substitute value of x in (2).

$\therefore y=-4$ or $8\frac{11}{27}$.

11. $x+y=49$ (1)

$x^2+y^2=1681$ (2)

Square (1),

$x^2+2xy+y^2=2401$ (3)

Subtract (2) from (3),

$2xy=720$ (4)

Subtract (4) from (2),

$x^2-2xy+y^2=961$.

Extract root, $x-y=\pm 31$ (5)

Add (5) and (1), $2x=80$ or 18.

$\therefore x=40$ or 9.

Substitute value of x in (1).

$\therefore y=9$ or 40.

12. $x^3 + y^3 = 341$ (1)
$x + y = 11$ (2)

Divide (1) by (2),
$x^2 - xy + y^2 = 31$ (3)
Sq. (2), $x^2 + 2xy + y^2 = 121$ (4)
Subt., $-3xy = -90$
$\therefore -xy = -30$ (5)
Add (3) and (5),
$x^2 - 2xy + y^2 = 1$.
Extract root, $x - y = \pm 1$ (6)
Add (2) and (6), $2x = 12$ or 10.
$\therefore x = 6$ or 5.
Subtract (6) from (2),
$2y = 10$ or 12.
$\therefore y = 5$ or 6.

13. $x^3 + y^3 = 1008$ (1)
$x + y = 12$ (2)

Divide (1) by (2),
$x^2 - xy + y^2 = 84$ (3)
Sq. (2), $x^2 + 2xy + y^2 = 144$ (4)
Subt., $-3xy = -60$
$\therefore -xy = -20$ (5)
Add (3) and (5),
$x^2 - 2xy + y^2 = 64$.
Extract root, $x - y = \pm 8$ (6)
Add (2) and (6), $2x = 20$ or 4.
$\therefore x = 10$ or 2.
Subtract (6) from (2),
$2y = 4$ or 20.
$\therefore y = 2$ or 10.

14. $x^3 - y^3 = 98$ (1)
$x - y = 2$ (2)

Divide (1) by (2),
$x^2 + xy + y^2 = 49$ (3)
Sq. (2), $x^2 - 2xy + y^2 = 4$ (4)
Subt., $3xy = 45$
$\therefore xy = 15$ (5)
Add (3) and (5),
$x^2 + 2xy + y^2 = 64$.
Extract root, $x + y = \pm 8$ (6)
Add (2) and (6), $2x = 10$ or -6.
$\therefore x = 5$ or -3.
Subtract (2) from (6),
$2y = 6$ or -10.
$\therefore y = 3$ or -5.

15. $x^3 - y^3 = 279$ (1)
$x - y = 3$ (2)

Divide (1) by (2),
$x^2 + xy + y^2 = 93$ (3)
Sq. (2), $x^2 - 2xy + y^2 = 9$ (4)
Subt., $3xy = 84$
$\therefore xy = 28$ (5)
Add (5) and (3),
$x^2 + 2xy + y^2 = 121$.
Extract root, $x + y = \pm 11$ (6)
Add (6) and (2), $2x = 14$ or -8.
$\therefore x = 7$ or -4.
Subtract (2) from (6),
$2y = 8$ or -14.
$\therefore y = 4$ or -7.

16. $x - 3y = 1$ (1)
$xy + y^2 = 5$ (2)
Transpose (1), $x = 1 + 3y$.
Substitute in (2),
$y(1 + 3y) + y^2 = 5$,
$y + 3y^2 + y^2 = 5$,
$4y^2 + y = 5$,
$4y^2 + (\ ) + \frac{1}{16} = 5\frac{1}{16}$,
$2y + \frac{1}{4} = \pm \frac{9}{4}$.
$\therefore y = 1$ or $-1\frac{1}{2}$.
Substitute value of y in (1),
$x = 4$ or $-2\frac{3}{4}$.

17. $4y = 5x + 1$ (1)
$2xy = 33 - x^2$ (2)
$y = \frac{5x+1}{4}$.
Substitute value of y in (2),
$\frac{10x^2 + 2x}{4} = 33 - x^2$,
$14x^2 + 2x = 132$.
Divide by 2,
$7x^2 + x = 66$,
$196x^2 + (\ ) + 1 = 1849$.
Extract root,
$14x + 1 = \pm 43$,
$14x = 42$ or -44.
$\therefore x = 3$ or $-3\frac{1}{7}$.
Substitute value of x in (1).
$\therefore y = 4$ or $-3\frac{13}{14}$.

18.

$$\frac{1}{x}-\frac{1}{y}=3 \quad (1)$$

$$\frac{1}{x^2}-\frac{1}{y^2}=21 \quad (2)$$

Divide (2) by (1),

$$\frac{1}{x}+\frac{1}{y}=7 \quad (3)$$

Add (3) and (1), $\frac{2}{x}=10.$

$$\therefore x=\tfrac{1}{5}.$$

Subtract (1) from (3),

$$\frac{2}{y}=4.$$

$$\therefore y=\tfrac{1}{2}.$$

19.

$$\frac{1}{x}-\frac{1}{y}=2\tfrac{1}{2} \quad (1)$$

$$\frac{1}{x^2}-\frac{1}{y^2}=8\tfrac{3}{4} \quad (2)$$

Divide (2) by (1),

$$\frac{1}{x}+\frac{1}{y}=\frac{7}{2} \quad (3)$$

Add (1) and (3), $\frac{2}{x}=\frac{12}{2}.$

$$\therefore x=\tfrac{1}{3}.$$

Subtract (1) from (3),

$$\frac{2}{y}=1.$$

$$\therefore y=2.$$

20.

$$x^2-2xy-y^2=1 \quad (1)$$

$$x+y=2 \quad (2)$$

Square (2), $x^2+2xy+y^2=4 \quad (3)$

Add (3) and (1), $2x^2=5,$

$$x^2=2\tfrac{1}{2}.$$

$$\therefore x=\pm\sqrt{2\tfrac{1}{2}}.$$

Substitute value of x in (2), $y=2\mp\sqrt{2\tfrac{1}{2}}.$

Exercise 102.

$$x^2+xy+2y^2=74 \quad (1)$$

$$2x^2+2xy+y^2=73 \quad (2)$$

Add, $3x^2+3xy+3y^2=147$

Divide by 3, $x^2+xy+y^2=49 \quad (3)$

Subtract (3) from (1), $y^2=25.$

$$\therefore y=\pm 5.$$

Substitute value of y in (3), $x^2\pm 5x+25=49,$

$$x^2\pm 5x=24,$$

$$4x^2\pm 20x+25=121.$$

Extract the root, $2x\pm 5=\pm 11,$

$$2x=\pm 6 \text{ or } \pm 16.$$

$$\therefore x=\pm 3 \text{ or } \pm 8.$$

2.

$$x^2 + xy + 4y^2 = 6 \quad (1)$$
$$3x^2 + 8y^2 = 14 \quad (2)$$

Substitute vx for y in both equations.

From (1), $x^2 + vx^2 + 4v^2x^2 = 6.$

$$\therefore x^2 = \frac{6}{1 + v + 4v^2} \quad (3)$$

From (2), $3x^2 + 8v^2x^2 = 14.$

$$\therefore x^2 = \frac{14}{3 + 8v^2} \quad (4)$$

Equate values of x^2,

$$\frac{6}{1 + v + 4v^2} = \frac{14}{3 + 8v^2},$$
$$18 + 48v^2 = 14 + 14v + 56v^2,$$
$$8v^2 + 14v = 4 \quad (5)$$
$$64v^2 + (\ ) + 49 = 81,$$
$$8v + 7 = \pm 9,$$
$$8v = 2 \text{ or } -16.$$
$$\therefore v = \tfrac{1}{4} \text{ or } -2.$$

Substitute values of v in (4), $x^2 = \frac{14}{3 + \frac{1}{2}}$ or $\frac{14}{3 + 32}$.

Then $x^2 = 4 \text{ or } \frac{2}{5}.$

$$\therefore x = \pm 2, \pm\sqrt{\tfrac{2}{5}}.$$

From (2), $y = \pm \tfrac{1}{2}, \pm 2\sqrt{\tfrac{2}{5}}.$

3.

$$x^2 - xy + y^2 = 21 \quad (1)$$
$$y^2 - 2xy = -15 \quad (2)$$

Substitute vx for y in both equations.

From (1), $x^2 - vx^2 + v^2x^2 = 21.$

$$\therefore x^2 = \frac{21}{1 - v + v^2} \quad (3)$$

From (2), $v^2x^2 - 2vx^2 = -15.$

$$\therefore x^2 = \frac{-15}{v^2 - 2v} \quad (4)$$

Equate values of x^2, $\frac{21}{1 - v + v^2} = \frac{-15}{v^2 - 2v}$ (5)

$$21v^2 - 42v = -15 + 15v - 15v^2,$$
$$36v^2 - 57v = -15,$$
$$5184v^2 - (\ ) + (57)^2 = 1089,$$
$$72v - 57 = \pm 33.$$
$$\therefore v = \tfrac{5}{4} \text{ or } \tfrac{1}{3}.$$

Substitute values of v in (4), $x^2 = 16$ or 27.

$$\therefore x = \pm 4 \text{ or } \pm 3\sqrt{3}.$$
$$\therefore y = \pm 5 \text{ or } \pm \sqrt{3}.$$

4.

$$x^2 - 4y^2 - 9 = 0.$$
$$xy + 2y^2 - 3 = 0.$$
$$x^2 - 4y^2 = 9 \quad (1)$$

Transpose, $xy + 2y^2 = 3 \quad (2)$

Substitute vx for y in both equations.

From (1), $x^2 - 4v^2x^2 = 9.$

$$\therefore x^2 = \frac{9}{1 - 4v^2} \quad (3)$$

From (2), $x^2v + 2x^2v^2 = 3.$

$$\therefore x^2 = \frac{3}{v + 2v^2} \quad (4)$$

Equate values of x^2, $\frac{9}{1-4v^2} = \frac{3}{v+2v^2}$,

$$30v^2 + 9v = 3,$$
$$10v^2 + 3v = 1,$$
$$400v^2 + (\ ) + 9 = 49,$$
$$20v + 3 = \pm 7,$$
$$20v = 4 \text{ or } -10.$$
$$\therefore v = \tfrac{1}{5} \text{ or } -\tfrac{1}{2}.$$

Substitue values of v in (3), $x^2 = \frac{5}{7}$ or ∞.

$$\therefore x = \pm 5\sqrt{\tfrac{3}{7}}.$$
$$\therefore y = \pm\sqrt{\tfrac{3}{7}}.$$

5.

$$x^2 - xy = 35 \quad (1)$$
$$xy + y^2 = 18 \quad (2)$$

Substitute vx for y in both equations.

From (1), $x^2 - vx^2 = 35.$

$$\therefore x^2 = \frac{35}{1 - v} \quad (3)$$

From (2), $vx^2 + v^2x^2 = 18.$

$$\therefore x^2 = \frac{18}{v + v^2} \quad (4)$$

Equate values of x^2, $\frac{35}{1-v} = \frac{18}{v+v^2}$,

$$35v^2 + 53v = 18,$$
$$4900v^2 + (\ ) + (53)^2 = 5329,$$
$$70v + 53 = \pm 73,$$
$$70v = 20 \text{ or } -126.$$
$$\therefore v = \tfrac{2}{7} \text{ or } -\tfrac{9}{5}.$$

Substitute values of v in (3), $x^2 = 49$ or $\frac{25}{2}$.

$$\therefore x = \pm 7 \text{ or } \pm 5\sqrt{\tfrac{1}{2}}.$$
$$\therefore y = \pm 2 \text{ or } \mp 9\sqrt{\tfrac{1}{2}}.$$

6.

$$x^2 + xy + 2y^2 = 44 \quad (1)$$
$$2x^2 - xy + y^2 = 16 \quad (2)$$

Substitute vx for y in both equations.

From (1), $x^2 + vx^2 + 2v^2x^2 = 44.$

$$\therefore x^2 = \frac{44}{1 + v + 2v^2} \quad (3)$$

From (2), $2x^2 - vx^2 + v^2x^2 = 16.$

$$\therefore x^2 = \frac{16}{2 - v + v^2}.$$

Equate values of x^2, $\frac{44}{1 + v + 2v^2} = \frac{16}{2 - v + v^2}$,

$$88 - 44v + 44v^2 = 16 + 16v + 32v^2,$$
$$12v^2 - 60v = -72,$$
$$v^2 - 5v = -6,$$
$$4v^2 - (\ ) + 25 = 1,$$
$$2v - 5 = \pm 1.$$
$$\therefore v = 3 \text{ or } 2.$$

Substitute values of v in (3), $x^2 = 2$ or 4.

From (3). $\therefore x = \pm\sqrt{2}$ or ± 2.

$\therefore y = \pm 3\sqrt{2}$ or ± 4.

7.

$$x^2 + xy = 15 \quad (1)$$
$$xy - y^2 = 2 \quad (2)$$

Substitute vx for y in both equations.

From (1), $x^2 + vx^2 = 15.$

$$\therefore x^2 = \frac{15}{1 + v} \quad (3)$$

From (2), $vx^2 - v^2x^2 = 2.$

$$\therefore x^2 = \frac{2}{v - v^2} \quad (4)$$

Equate values of x^2, $\frac{15}{1 + v} = \frac{2}{v - v^2}$,

$$15v - 15v^2 = 2 + 2v,$$
$$15v^2 - 13v = -2,$$
$$900v^2 - (\ ) + 169 = 49.$$

Extract the root, $30v - 13 = \pm 7,$

$$30v = 20 \text{ or } 6.$$
$$\therefore v = \tfrac{2}{3} \text{ or } \tfrac{1}{5}.$$

Substitute values of v in (3), $x^2 = 9$ or $\frac{15}{2}$.

$$\therefore x = \pm 3 \text{ or } \pm 5\sqrt{\tfrac{1}{2}}.$$
$$\therefore y = \pm 2 \text{ or } \pm\sqrt{\tfrac{1}{2}}.$$

8.

$$x^2 - xy + y^2 = 7 \quad (1)$$

$$3x^2 + 13xy + 8y^2 = 162 \quad (2)$$

Substitute vx for y in both equations.

From (1), $x^2 - vx + v^2x^2 = 7.$

$$\therefore x^2 = \frac{7}{1 - v + v^2} \quad (3)$$

From (2), $3x^2 + 13v + 8v^2x^2 = 162.$

$$\therefore x^2 = \frac{162}{3 + 13v + 8v^2}.$$

Equate values of x^2, $$\frac{7}{1 - v + v^2} = \frac{162}{3 + 13v + 8v^2} \quad (4)$$

$$\therefore 106v^2 - 253v = -141,$$

$$44944v^2 - (\ ) + (253)^2 = 4225.$$

Extract the root, $212v - 253 = \pm 65.$

$$\therefore v = \tfrac{3}{4} \text{ or } \tfrac{47}{53}.$$

Substitute values of v in (3), $x^2 = 4$ or $\frac{2809}{961}$.

$$\therefore x = \pm 2 \text{ or } \pm 2\tfrac{15}{31}.$$

$$\therefore y = \pm 3 \text{ or } \pm 2\tfrac{9}{31}.$$

9.

$$2x^2 + 3xy + y^2 = 70 \quad (1)$$

$$6x^2 + xy - y^2 = 50 \quad (2)$$

Substitute vx for y in both equations.

From (1), $2x^2 + 3vx^2 + v^2x^2 = 70.$

$$\therefore x^2 = \frac{70}{2 + 3v + v^2} \quad (3)$$

From (2), $6x^2 + vx^2 - v^2x^2 = 50.$

$$\therefore x^2 = \frac{50}{6 + v - v^2} \quad (4)$$

Equate values of x^2, $$\frac{70}{2 + 3v + v^2} = \frac{50}{6 + v - v^2},$$

$$420 + 70v - 70v^2 = 100 + 150v + 50v^2,$$

$$12v^2 + 8v = 32,$$

$$36v^2 + (\ ) + (2)^2 = 100,$$

$$6v + 2 = \pm 10.$$

$$\therefore v = 1\tfrac{1}{3} \text{ or } -2.$$

Substitute value of v in (3), $x^2 = 9$ or ∞.

$$\therefore x = \pm 3.$$

$$\therefore y = \pm 4.$$

10.

$$x^2 - xy - y^2 = 5 \quad (1)$$

$$2x^2 + 3xy + y^2 = 28 \quad (2)$$

Substitute vx for y in both equations.

From (1), $x^2 - vx^2 - v^2x^2 = 5.$

$$\therefore x^2 = \frac{5}{1 - v - v^2} \quad (3)$$

From (2), $2x^2 + 3vx^2 + v^2x^2 = 28.$

$$\therefore x^2 = \frac{28}{2 + 3v + v^2}.$$

Equate values of x^2, $\frac{5}{1 - v - v^2} = \frac{28}{2 + 3v + v^2}$ (4)

$$10 + 15v + 5v^2 = 28 - 28v - 28v^2,$$

$$33v^2 + 43v = 18,$$

$$4356v^2 + (\ ) + (43)^2 = 4225,$$

$$66v + 43 = \pm 65.$$

$$\therefore v = \tfrac{1}{3} \text{ or } -\tfrac{18}{11}.$$

Substitute values of v in (3), $x^2 = 9$ or -121.

$$\therefore x = \pm 3 \text{ or } \pm 11\sqrt{-1}.$$

$$\therefore y = \pm 1 \text{ or } \mp 18\sqrt{-1}.$$

11.

$$4xy = 96 - x^2y^2 \quad (1)$$

$$x + y = 6 \quad (2)$$

Let $x = (u + v)$,

and $y = (u - v)$.

From (2), $u + v + u - v = 6,$

$$2u = 6,$$

$$u = 3.$$

From (1), $4(u^2 - v^2) = 96 - u^4 + 2u^2v^2 - v^4,$

$$4u^2 - 4v^2 = 96 - u^4 + 2u^2v^2 - v^4.$$

Substitute value of u, $v^4 - 22v^2 = -21,$

$$4v^2 - (\ ) + (22)^2 = 400,$$

$$2v^2 - 22 = \pm 20,$$

$$2v^2 = 22 \pm 20,$$

$$v^2 = 21 \text{ or } 1.$$

$$\therefore v = \pm\sqrt{21} \text{ or } \pm 1.$$

$$\therefore x = u + v = 3 \pm \sqrt{21},\ 4,\ 2,$$

and $y = u - v = 3 \mp \sqrt{21},\ 2,\ 4.$

12.

$$x^2 + y^2 = 18 - x - y \quad (1)$$
$$xy = 6 \quad (2)$$

Put $u + v$ for x, and $u - v$ for y.

(1) becomes $(u+v)^2 + (u-v)^2 = 18 - 2u$,

$$2u^2 + 2v^2 + 2u = 18,$$
$$u^2 + v^2 + u = 9 \quad (3)$$

(2) becomes $(u+v)(u-v) = 6$,

or $$u^2 - v^2 = 6 \quad (4)$$

Add (3) and (4), $2u^2 + u = 15$.

Complete the square, $16u^2 + (\ ) + 1 = 121$,

$$4u + 1 = \pm 11.$$
$$\therefore u = 2\tfrac{1}{2} \text{ or } -3.$$

Substitute value of u in (4), $-v^2 = 6 - \frac{25}{4}$ or $6 - 9$.

$$\therefore v = \pm \tfrac{1}{2} \text{ or } \pm\sqrt{3}.$$
$$\therefore x = u + v = 3, 2, \text{ or } -3 \pm \sqrt{3},$$
and $y = u - v = 2, 3, \text{ or } -3 \mp \sqrt{3}.$

13.

$$2(x^2 + y^2) = 5xy \quad (1)$$
$$4(x - y) = xy \quad (2)$$

Put $u + v$ for x, and $u - v$ for y,

$$2(2u^2 + 2v^2) = 5(u^2 - v^2) \quad (3)$$
$$4(2v) = u^2 - v^2 \quad (4)$$

Transpose and combine, $9v^2 - u^2 = 0$ (5)

$$+ u^2 - v^2 = 8v \quad (6)$$

Add (5) and (6), $8v^2 = 8v$

$$8v^2 - 8v = 0.$$
$$\therefore v = 0 \text{ or } 1.$$

Substitute value of v in (6), $u^2 = 8v + v^2$,

$$u^2 = 0 \text{ or } 9,$$
$$u = 0 \text{ or } \pm 3.$$
$$\therefore x = u + v = 0, 4, -2.$$
and $y = u - v = 0, 2, -4.$

14.

$$4(x+y) = 3xy \quad (1)$$
$$x+y+x^2+y^2 = 26 \quad (2)$$

Put $u+v$ for x, and $u-v$ for y.

(1) becomes $8u = 3u^2 - 3v^2$.

$$\therefore 8u - 3u^2 + 3v^2 = 0 \quad (3)$$

(2) becomes $2u + 2v^2 + 2u^2 = 26 \quad (4)$

Multiply (4) by 3, $6u + 6u^2 + 6v^2 = 78$

Multiply (3) by 2, $16u - 6u^2 + 6v^2 = 0$

Subtract, $12u^2 - 10u = 78$

Complete the square, $144u^2 - (\ ) + 25 = 961$,

$12u - 5 = \pm 31$,

$12u = 36$ or -26.

$\therefore u = 3$ or $-2\frac{1}{6}$.

Substitute value of u in (3), $3v^2 = 3$.

$\therefore v = \pm 1$.

Substitute $-2\frac{1}{6}$ for u in (3), $3v^2 = 11\frac{11}{36}$.

$\therefore v = \pm \frac{1}{6}\sqrt{377}$.

$\therefore x = u+v = 4$, 2, or $\frac{1}{6}(-13 \pm \sqrt{377})$,

and $y = u-v = 2$, 4, or $\frac{1}{6}(-13 \mp \sqrt{377})$.

15.

$$4x^2 + xy + 4y^2 = 58 \quad (1)$$
$$5x^2 + 5y^2 = 65 \quad (2)$$

Multiply (1) by 5, $20x^2 + 5xy + 20y^2 = 290 \quad (3)$

Multiply (2) by 4, $20x^2 + 20y^2 = 260 \quad (4)$

Subtract, $5xy = 30$

$$\therefore xy = 6 \quad (5)$$

Divide (2) by 5, $x^2 + y^2 = 13 \quad (6)$

Substitute $u+v$ for x, and $u-v$ for y in (5) and (6),

$$u^2 - v^2 = 6 \quad (7)$$
$$2u^2 + 2v^2 = 13 \quad (8)$$

Multiply (7) by 2, $2u^2 - 2v^2 = 12 \quad (9)$

Add, $4u^2 = 25$

$\therefore u = \pm \frac{5}{2}$.

Subtract (9) from (8), $4v^2 = 1$,

$v^2 = \frac{1}{4}$.

$\therefore v = \pm \frac{1}{2}$.

$\therefore x = u+v = \pm \frac{5}{2} \pm \frac{1}{2} = \pm 3$ or ± 2,

and $y = u-v = \pm \frac{5}{2} \mp \frac{1}{2} = \pm 2$ or ± 3.

16.

$$xy(x+y) = 30 \quad (1)$$
$$x^3 + y^3 = 35 \quad (2)$$

Substitute $u+v$ for x, and $u-v$ for y.

(1) becomes $(u+v)(u-v)\{(u+v)+(u-v)\} = 30$,

or $2u^3 - 2uv^2 = 30 \quad (3)$

(2) becomes $(u+v)^3 + (u-v)^3 = 35$,

or $2u^3 + 6uv^2 = 35 \quad (4)$

Multiply (3) by 3, $6u^3 - 6uv^2 = 90$

(4) is $2u^3 + 6uv^2 = 35$

Add, $8u^3 = 125$

$2u = 5$,

$u = \frac{5}{2}$.

Substitute value of u in (3), $\frac{250}{8} - \frac{10v^2}{2} = 30$,

$250 - 40v^2 = 240$,

$40v^2 = 10$.

$\therefore v = \pm\frac{1}{2}$.

$\therefore x = u+v = 3$ or 2,

and $y = u-v = 2$ or 3.

Exercise 103.

1. $x - y = 7 \quad (1)$

$x^2 + xy + y^2 = 13 \quad (2)$

Square (1),

$x^2 - 2xy + y^2 = 49 \quad (3)$

Subtract (2) from (3),

$-3xy = 36$.

Divide by -3, $xy = -12 \quad (4)$

Add (4) and (2),

$x^2 + 2xy + y^2 = 1$.

Extract root, $x + y = \pm 1 \quad (5)$

Add (5) and (1), $2x = 8$ or 6.

$\therefore x = 4$ or 3.

Substitute value of x in (1),

$y = -3$ or -4.

2. $x^2 + xy = 35 \quad (1)$

$xy - y^2 = 6 \quad (2)$

Substitute vx for y.

From (1), $x^2 = \frac{35}{1+v} \quad (3)$

From (2), $x^2 = \frac{6}{v - v^2} \quad (4)$

$\therefore \frac{35}{1+v} = \frac{6}{v-v^2}$,

$35v^2 - 29v = -6$,

$4900v^2 - (\ ) + (29)^2 = 1$,

$70v - 29 = \pm 1$,

$70v = 30$ or 28,

$\therefore v = \frac{3}{7}$ or $\frac{2}{5}$.

Substitute value of v in (3),

$x^2 = \frac{49}{2}$ or 25.

$x = \pm 7\sqrt{\frac{1}{2}}$ or ± 5.

$y = vx = \pm 3\sqrt{\frac{1}{2}}$ or ± 2.

3.

$$xy - 12 = 0 \quad (1)$$
$$x - 2y = 5 \quad (2)$$

Transpose in (1), $xy = 12$,

$$y = \frac{12}{x}.$$

Substitute value of y in (2),

$$x - \frac{24}{x} = 5.$$

Simplify, $x^2 - 24 = 5x$.

Transpose, $x^2 - 5x = 24$.

Complete the square,

$$4x^2 - (\quad) + 25 = 121,$$
$$2x - 5 = \pm 11,$$
$$2x = 16 \text{ or } -6.$$
$$\therefore x = 8 \text{ or } -3.$$

Substitute value of x in (2),

$$y = 1\tfrac{1}{2} \text{ or } -4.$$

4.

$$xy - 7 = 0 \quad (1)$$
$$x^2 + y^2 = 50 \quad (2)$$

Transpose in (1), $xy = 7$ (3)

Multiply (3) by 2,

$$2xy = 14 \quad (4)$$

Add (4) and (2),

$$x^2 + 2xy + y^2 = 64.$$
$$\therefore x + y = \pm 8 \quad (5)$$

Subtract (4) from (2),

$$x^2 - 2xy + y^2 = 36.$$
$$\therefore x - y = \pm 6 \quad (6)$$

Add (5) and (6), $2x = \pm 14$ or ± 2.

$$\therefore x = \pm 7 \text{ or } \pm 1.$$

Subtract (6) from (5),

$$2y = \pm 2 \text{ or } \pm 14.$$
$$\therefore y = \pm 1 \text{ or } \pm 7.$$

5.

$$2x - 5y = 9 \quad (1)$$
$$x^2 - xy + y^2 = 7 \quad (2)$$

From (1),

$$x = \frac{9 + 5y}{2} \quad (3)$$

Substitute value of x in (2),

$$\left(\frac{9 + 5y}{2}\right)^2 - y\left(\frac{9 + 5y}{2}\right) + y^2 = 7.$$

Simplify, $19y^2 + 72y = -53$.

Complete the square,

$$1444y^2 + (\quad) + (72)^2 = 1156,$$
$$38y + 72 = \pm 34,$$
$$38y = -38 \text{ or } -106.$$
$$\therefore y = -1 \text{ or } -2\tfrac{17}{19}.$$

Substitute value of y in (1),

$$2x = 9 + (-5) \text{ or } 9 + (-13\tfrac{8}{19}).$$
$$\therefore x = 2 \text{ or } -2\tfrac{9}{19}.$$

6.

$$x - y = 9 \quad (1)$$
$$xy + 8 = 0 \quad (2)$$

Transpose (2), $xy = -8$ (3)

Square (1), $x^2 - 2xy + y^2 = 81$

Multiply (3) by 4, $4xy = -32$

Add, $x^2 + 2xy + y^2 = 49$

Extract root, $x + y = \pm 7$ (4)

Add (1) and (4), $2x = 16$ or 2.

$$\therefore x = 8 \text{ or } 1.$$

Subtract (1) from (4), $2y = -2$ or -16.

$$\therefore y = -1 \text{ or } -8.$$

7. $5x - 7y = 0$ (1)

$5x^2 - \frac{13xy}{4} = 4 - 7y^2$ (2)

From (1), $x = \frac{7y}{5}$ (3)

Simplify (2),

$20x^2 - 13xy + 28y^2 = 16$ (4)

Substitute value of x in (4),

$\frac{980y^2}{25} - \frac{91y^2}{5} + 28y^2 = 16,$

$1225y^2 = 400,$

$35y = \pm 20.$

$\therefore y = \pm \frac{4}{7}.$

Substitute value of y in (1),

$5x \pm \frac{28}{7} = 0.$

$\therefore x = \mp \frac{4}{5}.$

8. $x - y = 1$ (1)

$x^2 + y^2 = 8\frac{1}{2}$ (2)

Square (1),

$x^2 - 2xy + y^2 = 1$ (3)

(2) is $x^2 + y^2 = 8\frac{1}{2}$

Subt., $-2xy = -7\frac{1}{2}$ (4)

Subtract (4) from (2),

$x^2 + 2xy + y^2 = 16.$

Extract root, $x + y = \pm 4$ (5)

Add (5) and (1), $2x = 5$ or $-3.$

$\therefore x = 2\frac{1}{2}$ or $-1\frac{1}{2}.$

Subtract (5) from (1),

$-2y = -3$ or $5.$

$\therefore y = 1\frac{1}{2}$ or $-2\frac{1}{2}.$

9. $x^2 + 4xy = 3$ (1)

$4xy + y^2 = 2\frac{1}{4}$ (2)

Substitute vx for y,

$x^2 + 4vx^2 = 3$ (3)

$4vx^2 + v^2x^2 = 2\frac{1}{4}$ (4)

From (3) and (4),

$x^2 = \frac{3}{1+4v}$ (5)

$x^2 = \frac{9}{16v + 4v^2}$ (6)

$\therefore \frac{3}{1+4v} = \frac{9}{16v + 4v^2}$

$48v + 12v^2 = 9 + 36v,$

$12v^2 + 12v = 9,$

$4v^2 + 4v = 3,$

$4v^2 + ( ) + 1 = 4,$

$2v + 1 = \pm 2.$

$\therefore v = \frac{1}{2}$ or $-1\frac{1}{2}.$

Substitute values of v in (5),

$x = \pm 1$ or $\pm\sqrt{-\frac{3}{5}},$

and $y = \pm\frac{1}{2}$ or $\mp\frac{3}{2}\sqrt{-\frac{3}{5}}.$

10. $x^2 - xy + y^2 = 48$ (1)

$x - y - 8 = 0$ (2)

(1) is $x^2 - xy + y^2 = 48$

Sq.(2), $x^2 - 2xy + y^2 = 64$

Subt., $xy = -16$

Multiply by 3,

$3xy = -48$ (3)

Add (3) and (1),

$x^2 + 2xy + y^2 = 0.$

Extract root,

$x + y = 0$ (4)

Add (4) and (2),

$2x = 8.$

$\therefore x = 4.$

Subtract (2) from (4),

$2y = -8.$

$\therefore y = -4.$

11.

$$x^2 + 3xy + y^2 = 1 \quad (1)$$

$$3x^2 + xy + 3y^2 = 13 \quad (2)$$

Subtract (1) from (2), $2x^2 - 2xy + 2y^2 = 12.$

Divide by 2, $x^2 - xy + y^2 = 6 \quad (3)$

(1) is $x^2 + 3xy + y^2 = 1$

Subtract, $-4xy = 5 \quad (4)$

Add $4 \times$ (1) to (4), $4x^2 + 8xy + 4y^2 = 9 \quad (5)$

Extract the root, $2x + 2y = \pm 3.$

Divide by 2, $x + y = \pm \frac{3}{2} \quad (6)$

Add $\frac{1}{4}$ of (4) to (3), $x^2 - 2xy + y^2 = \frac{29}{4},$

$$x - y = \pm \tfrac{1}{2}\sqrt{29} \quad (7)$$

Add (6) and (7), $2x = \pm \frac{3}{2} \pm \frac{1}{2}\sqrt{29}.$

$$\therefore x = \tfrac{1}{4}(\pm 3 \pm \sqrt{29}).$$

Subtract (7) from (6), $2y = \pm \frac{3}{2} \mp \frac{1}{2}\sqrt{29}.$

$$\therefore y = \tfrac{1}{4}(\pm 3 \mp \sqrt{29}.)$$

12.

$$x^2 - 2xy + 3y^2 = 1\tfrac{2}{9} \quad (1)$$

$$x^2 + xy - y^2 = \tfrac{1}{9} \quad (2)$$

Substitute vx for y.

From (1), $x^2 - 2vx^2 + 3v^2x^2 = \frac{11}{9}.$

From (2), $x^2 + vx^2 - v^2x^2 = \frac{1}{9}.$

Whence $$x^2 = \frac{11}{9 - 18v + 27v^2} \quad (3)$$

and $$x^2 = \frac{1}{9 + 9v - 9v^2} \quad (4)$$

$$\therefore \frac{11}{9 - 18v + 27v^2} = \frac{1}{9 + 9v - 9v^2}.$$

$$99 + 99v - 99v^2 = 9 - 18v + 27v^2,$$

$$-126v^2 + 117v = -90.$$

Divide by -9, $14v^2 - 13v = 10.$

Complete the square, $784v^2 - (\ ) + 169 = 729.$

Extract the root, $28v - 13 = \pm 27,$

$$28v = 40 \text{ or } -14.$$

$$\therefore v = \tfrac{10}{7} \text{ or } -\tfrac{1}{2}.$$

Substitute value of v in (4), $x^2 = \frac{40}{171}$ or $\frac{4}{9}.$

$$\therefore x = \pm \tfrac{2}{3}\sqrt{\tfrac{10}{19}} \text{ or } \pm \tfrac{2}{3},$$

and $y = \pm \frac{10}{3}\sqrt{\frac{1}{19}}$ or $\mp \frac{1}{3}$.

13. $x+y=a$ (1)

$4xy=a^2-4b^2$ (2)

Square (1), $x^2+2xy+y^2=a^2$ (3)

(1) is $4xy=a^2-4b^2$

Subt., $x^2-2xy+y^2=4b^2$ (4)

Extract root, $x-y=\pm 2b$ (5)

Add (5) and (1), $2x=a\pm 2b$.

$\therefore x=\frac{a}{2}\pm b$.

Subtract (5) from (1),

$2y=a\mp 2b$.

$\therefore y=\frac{a}{2}\mp b$.

14. $x-y=1$ (1)

$\frac{x}{y}+\frac{y}{x}=2\frac{1}{6}$. (2)

In (1), $x=y+1$.

Substitute in (2),

$$\frac{y+1}{y}+\frac{y}{y+1}=\frac{13}{6},$$

$6y^2+12y+6+6y^2=13y^2+13y$,

$y^2+y=6$.

Complete the square,

$4y^2+(\ )+1=25$,

$2y+1=\pm 5$.

$\therefore y=2$ or -3.

$\therefore x=3$ or -2.

15.

$x^2+9xy=340$ (1)

$7xy-y^2=171$ (2)

Subtract (2) from (1), $x^2+2xy+y^2=169$,

$x+y=\pm 13$ (3)

$\therefore x=13-y$ or $-(13+y)$.

Substitute in (1) the first value of x,

$(13-y)^2+9(13-y)y=340$,

$169-26y+y^2+117y-9y^2=340$,

$8y^2-91y=171$.

Complete the square,

$256y^2-(\ )+(91)^2=2809$,

$16y-91=\pm 53$.

$\therefore y=9$ or $2\frac{3}{8}$ (4)

Substitute in (1) the second value of x,

$(13+y)^2-9(13+y)y=340$,

$169+26y+y^2-117y-9y^2=340$,

$8y^2+91y=-171$.

Whence, $y=-9$ or $-2\frac{3}{8}$.

Substitute values of y in (3), $x=\pm 4$ or $\pm 10\frac{5}{8}$.

38.

$$10x^2 + 15xy = 3ab - 2a^2 \quad (1)$$

$$10y^2 + 15xy = 3ab - 2b^2 \quad (2)$$

Let $ux = y$.

(1) becomes $10x^2 + 15x^2u = 3ab - 2a^2$,

$$x^2 = \frac{3ab - 2a^2}{10 + 15u} \quad (3)$$

(2) becomes $10x^2u^2 + 15x^2u = 3ab - 2b^2$,

$$x^2 = \frac{3ab - 2b^2}{10u^2 + 15u} \quad (4)$$

Equate values of x^2, $\frac{3ab - 2a^2}{10 + 15u} = \frac{3ab - 2b^2}{10u^2 + 15u}$.

Simplify,

$$30abu^2 - 20a^2u^2 - 30a^2u + 30b^2u = 30ab - 20b^2.$$

Divide by 10,

$$3abu^2 - 2a^2u^2 - 3a^2u + 3b^2u = 3ab - 2b^2,$$

or $u^2(3ab - 2a^2) - 3u(a^2 - b^2) = 3ab - 2b^2$.

Complete the square,

$$4u^2(3ab - 2a^2)^2 - (\ ) + 9(a^2 - b^2)^2 = 9a^4 - 24a^3b + 34a^2b^2 - 24ab^3 + 9b^4.$$

Extract the root,

$$2u(3ab - 2a^2) - 3(a^2 - b^2) = \pm(3a^2 - 4ab + 3b^2),$$

$$2u(3ab - 2a^2) = 6a^2 - 4ab \text{ or } 4ab - 6b^2.$$

$$\therefore u = \frac{3a - 2b}{3b - 2a} \text{ or } -\frac{b}{a}$$

Substitute value of $\frac{3a - 2b}{3b - 2a}$ for u in (3),

$$x^2 = \frac{(3b - 2a)^2}{25}.$$

Extract the root, $x = \pm\left(\frac{3b - 2a}{5}\right)$.

Substitute $-\frac{b}{a}$ for u in (3), $x^2 = -\frac{a^2}{5}$.

$$\therefore x = \pm a\sqrt{-\tfrac{1}{5}}.$$

Since $ux = y$,

$$y = \frac{3a - 2b}{3b - 2a} \times \pm\left(\frac{3b - 2a}{5}\right).$$

$$\therefore y = \pm\frac{3a - 2b}{5},$$

$$\text{or } y = -\frac{b}{a} \times (\pm a\sqrt{-\tfrac{1}{5}}).$$

$$\therefore y = \mp b\sqrt{-\tfrac{1}{5}}.$$

21.

$$x^2 - y^2 = 0 \quad (1)$$
$$3x^2 - 4xy + 5y^2 = 9 \quad (2)$$

From (1), $x^2 = y^2$.

$\therefore y = \pm x$.

Hence, in (2), $3x^2 \pm 4x^2 + 5x^2 = 9$,

$12x^2$ or $4x^2 = 9$.

$\therefore x = \pm \frac{1}{2}\sqrt{3}$ or $\pm \frac{3}{2}$,

and $y = \pm \frac{1}{2}\sqrt{3}$ or $\pm \frac{3}{2}$.

22.

$$\frac{x+y}{x-y} + \frac{x-y}{x+y} = \frac{10}{3} \quad (1)$$
$$x^2 + y^2 = 45 \quad (2)$$

From (1), $3(x^2+2xy+y^2)+3(x^2-2xy+y^2) = 10x^2 - 10y^2$,

$3x^2 + 6xy + 3y^2 + 3x^2 - 6xy + 3y^2 = 10x^2 - 10y^2$,

$-4x^2 + 16y^2 = 0$,

$-x^2 + 4y^2 = 0 \quad (3)$

Add (2) and (3), $5y^2 = 45$.

$\therefore y = \pm 3$.

Substitute values of y in (2), $x^2 + 9 = 45$.

$\therefore x = \pm 6$.

23.

$$\frac{1}{x} + \frac{1}{y} = 5$$
$$\frac{1}{x+1} + \frac{1}{y+1} = \frac{17}{12}$$

Clear of fractions and unite, $x + y = 5xy \quad (1)$

$5x + 5y = 7 - 17xy \quad (2)$

Divide (2) by (1), $5 = \frac{7 - 17xy}{5xy} \quad (3)$

$25xy = 7 - 17xy \quad (4)$

$42xy = 7$,

$xy = \frac{1}{6} \quad (5)$

From (1), $x + y = \frac{5}{6} \quad (6)$

Square (6), $x^2 + 2xy + y^2 = \frac{25}{36}$

Multiply (5) by 4, $4xy = \frac{24}{36}$

Subtract, $x^2 - 2xy + y^2 = \frac{1}{36}$

$x - y = \pm \frac{1}{6} \quad (7)$

Add (7) and (6), $2x = 1$ or $\frac{2}{3}$.

$\therefore x = \frac{1}{2}$ or $\frac{2}{3}$.

Subtract (7) from (6), $2y = \frac{2}{3}$ or 1.

$\therefore y = \frac{1}{3}$ or $\frac{1}{2}$.

24.

$$x^2 - xy + y^2 = 7 \quad (1)$$
$$x^4 + x^2y^2 + y^4 = 133 \quad (2)$$

Divide (2) by (1), $x^2 + xy + y^2 = 19$ (3)

Subtract (1) from (3), $2xy = 12.$

$\therefore xy = 6$ (4)

Add (4) to (3), and subtract (4) from (1),

$$x^2 + 2xy + y^2 = 25,$$
$$x^2 - 2xy + y^2 = 1.$$

Whence $x + y = \pm 5,$

$x - y = \pm 1.$

$\therefore x = \pm 3$ or $\pm 2,$

and $y = \pm 2$ or $\pm 3.$

25.

$$x + y = 4 \quad (1)$$
$$x^4 + y^4 = 82 \quad (2)$$

Put $u + v$ for x, and $u - v$ for y.

(1) becomes $2u = 4.$

$\therefore u = 2.$

(2) becomes $u^4 + 6u^2v^2 + v^4 = 41$ (3)

Substitute 2 for u in (3), $16 + 24v^2 + v^4 = 41,$

$v^4 + 24v^2 = 25.$

Complete the square, $v^4 + (\ ) + 144 = 169,$

$v^2 + 12 = \pm 13,$

$v^2 = 1$ or $-25.$

$\therefore v = \pm 1$ or $\pm\sqrt{-25}.$

$\therefore x = 3, 1,$ or $2 \pm \sqrt{-25},$

and $y = 1, 3,$ or $2 \mp \sqrt{-25}.$

26.

$$x^3 - y^3 = a^3 \quad (1)$$
$$x - y = a \quad (2)$$

Divide (1) by (2), $x^2 + xy + y^2 = a^2$ (3)

Square (2), $x^2 - 2xy + y^2 = a^2$

Subtract, $3xy = 0$

$xy = 0$ (4)

Add (3) and (4), $x^2 + 2xy + y^2 = a^2.$

Extract the root, $x + y = \pm a$ (5)

Subtract (2) from (5), $2y = 0$ or $-2a.$

$\therefore y = 0$ or $-a.$

Add (2) and (5), $2x = 2a$ or $0.$

$\therefore x = a$ or $0.$

27.

$$x^2 - xy = a^2 + b^2 \quad (1)$$
$$xy - y^2 = 2ab \quad (2)$$

Subtract (2) from (1), $x^2 - 2xy + y^2 = a^2 - 2ab + b^2$.

Extract root, $x - y = \pm(a - b)$.

(1) is $x(x - y) = a^2 + b^2$.

Substitute value of $x - y$ in (1), $\pm x(a - b) = a^2 + b^2$.

$$\therefore x = \pm\frac{a^2 + b^2}{a - b}.$$

(2) is $y(x - y) = 2ab$.

Substitute value of $(x - y)$ in (2),

$$\pm y(a - b) = 2ab.$$
$$\therefore y = \pm\frac{2ab}{a - b}.$$

28.

$$x^2 - y^2 = 4ab \quad (1)$$
$$xy = a^2 - b^2 \quad (2)$$

In (2), $y = \dfrac{a^2 - b^2}{x}$.

Substitute value of y in (1), $x^2 - \dfrac{(a^2-b^2)^2}{x^2} = 4ab$,

$$x^4 - a^4 + 2a^2b^2 - b^4 = 4abx^2,$$
$$x^4 - 4abx^2 = a^4 - 2a^2b^2 + b^4.$$

Complete the square, $x^4 - (\ ) + 4a^2b^2 = a^4 + 2a^2b^2 + b^4$.

Extract root, $x^2 - 2ab = \pm(a^2 + b^2)$,

$$x^2 = \pm(a^2 + 2ab + b^2).$$
$$\therefore x = \pm(a + b).$$

Substitute value of x in (1), $(a + b)^2 - y^2 = 4ab$,

$$y^2 = a^2 - 2ab + b^2.$$
$$\therefore y = \pm(a - b).$$

29.

$$xy = 0 \quad (1)$$
$$x^2 + y^2 = 16 \quad (2)$$

Multiply (1) by 2, $2xy = 0$ (3)

Add (3) and (2), $x^2 + 2xy + y^2 = 16$ (4)

Extract root, $x + y = \pm 4$ (5)

Multiply (1) by 4, $4xy = 0$ (6)

Subtract (6) from (4), $x^2 - 2xy + y^2 = 16$

Extract root, $x - y = \pm 4$ (7)

Add (5) and (7), $2x = \pm 8$ or 0.

$$\therefore x = \pm 4 \text{ or } 0.$$

Subtract (7) from (5), $2y = 0$ or ± 8.

$$\therefore y = 0 \text{ or } \pm 4.$$

30.

$$x^2 + xy + y^2 = 37 \quad (1)$$
$$x^4 + x^2y^2 + y^4 = 481 \quad (2)$$

Divide (2) by (1), $x^2 - xy + y^2 = 13$ (3)

(1) is $x^2 + xy + y^2 = 37$

Subt., $-2xy = -24$

$$\therefore -xy = -12 \quad (4)$$

Add (3) and (4), $x^2 - 2xy + y^2 = 1$.

Extract root, $x - y = \pm 1$ (5)

Subtract (4) from (1), $x^2 + 2xy + y^2 = 49$.

Extract root, $x + y = \pm 7$ (6)

Add (5) and (6), $2x = \pm 8$ or ± 6.

$$\therefore x = \pm 4 \text{ or } \pm 3.$$

Subt. (5) fr. (6), $2y = \pm 6$ or ± 8.

$$\therefore y = \pm 3 \text{ or } \pm 4.$$

31.

$$x^2 = ax + by \quad (1)$$
$$y^2 = ay + bx \quad (2)$$

If $x = 0$, y must equal 0.

If $x = y$, and does not equal 0, then $x = a + b$, and $y = a + b$.

If x does not equal y, subtract (2) from (1), and divide by $x - y$.

$$x + y = a - b \quad (3)$$

Add (1) and (2), $x^2 + y^2 = a(x + y) + b(x + y)$.

Substitute $a - b$ for $x + y$, $= a(a - b) + b(a - b)$.

That is, $x^2 + y^2 = a^2 - b^2$ (4)

Square (3), $x^2 + 2xy + y^2 = a^2 - 2ab + b^2$ (5)

Subtract (4) from (5), $2xy = -2ab + 2b^2$ (6)

Subtract (6) from (4), $x^2 - 2xy + y^2 = a^2 + 2ab - 3b^2$.

Extract root, $x - y = \pm\sqrt{a^2 + 2ab - 3b^2}$ (7)

Add (7) and (3), $2x = a - b \pm \sqrt{a^2 + 2ab - 3b^2}$.

$\therefore x = \frac{1}{2}(a - b \pm \sqrt{a^2 + 2ab - 3b^2})$.

Subtract (7) from (3), $2y = a - b \mp \sqrt{a^2 + 2ab - 3b^2}$.

$\therefore y = \frac{1}{2}(a - b \mp \sqrt{a^2 + 2ab - 3b^2})$.

32.

$$x - y - 2 = 0 \quad (1)$$
$$15(x^2 - y^2) = 16xy \quad (2)$$

Transpose (1), $x - y = 2$ (3)

Divide (2) by (3), $15(x + y) = 8xy$,

$$15x + 15y - 8xy = 0 \quad (4)$$

From (1), $x = y + 2$.

Substitute value of x in (4),

$15y + 30 + 15y - 8y^2 - 16y = 0$,

$8y^2 - 14y = 30$.

Complete the square, $64y^2 - (\ ) + (7)^2 = 289$,

$8y - 7 = \pm 17$,

$8y = 24$ or -10.

$\therefore y = 3$ or $-1\frac{1}{4}$.

Substitute value of y in (1). $\therefore x = 5$ or $\frac{3}{4}$.

33.

$$\frac{x+y}{x-y}+\frac{x-y}{x+y}=\frac{89}{40} \quad (1)$$

$$6x=20y+9 \quad (2)$$

Simplify (1), $9x^2-169y^2=0,$

$$9x^2=169y^2 \quad (3)$$

Extract the root, $3x=\pm 13y,$

$$3x\mp 13y=0.$$

Multiply by 2, $6x\mp 26y=0 \quad (4)$

Transpose in (2), $6x-20y=9 \quad (5)$

Subtract (4) from (5), $6y=9,$

or $-46y=9.$

$$\therefore y=1\tfrac{1}{2} \text{ or } -\tfrac{9}{46}.$$

Substitute values of y in (2), $x=6\tfrac{1}{2}$ or $-2\tfrac{7}{46}.$

34.

$$\frac{x}{a}+\frac{y}{b}=1 \quad (1)$$

$$\frac{a}{x}+\frac{b}{y}=4 \quad (2)$$

Simplify (1), $bx+ay=ab \quad (3)$

Simplify (2), $bx+ay=4xy \quad (4)$

$$\therefore 4xy=ab,$$

$$\text{and } y=\frac{ab}{4x}.$$

Substitute value of y in (3), $bx+\frac{a^2b}{4x}=ab.$

Simplify, $4x^2+a^2=4ax.$

Transpose, $4x^2-4ax=-a^2.$

Complete the square, $4x^2-(\ )+a^2=0.$

Extract the root, $2x-a=0.$

$$\therefore x=\frac{a}{2}.$$

Substitute value of x in (3), $y=\frac{b}{2}.$

35.

$$x^3 + y^3 = 7 + xy \quad (1)$$

$$x^3 + y^3 = 6xy - 1 \quad (2)$$

Transpose xy in (1), $x^2 - xy + y^2 = 7$ (3)

Divide (2) by (3), $x + y = \frac{6xy - 1}{7}$.

Simplify, $7x + 7y = 6xy - 1$ (4)

Put $u + v$ for x, and $u - v$ for y, in (4),

$$7(u + v) + 7(u - v) = 6(u^2 - v^2) - 1,$$

$$6u^2 - 6v^2 - 14u = 1 \quad (5)$$

Put $u + v$ for x, and $u - v$ for y, in (3),

$$(u + v)^2 - (u^2 - v^2) + (u - v)^2 = 7,$$

$$u^2 + 3v^2 = 7 \quad (6)$$

Multiply (6) by 2, $2u^2 + 6v^2 = 14$ (7)

Add (5) and (7), $8u^2 - 14u = 15$.

Complete the square, $256u^2 - (\ ) + (14)^2 = 676$.

Extract the root, $16u - 14 = \pm 26$,

$$16u = 40 \text{ or } -12,$$

$$u = \tfrac{5}{2} \text{ or } -\tfrac{3}{4}.$$

Substitute $\frac{5}{2}$ for u in (6), $\frac{25}{4} + 3v^2 = 7$,

$$3v^2 = \tfrac{3}{4},$$

$$v^2 = \tfrac{1}{4}.$$

Extract the root, $v = \pm \frac{1}{2}$.

Substitute $-\frac{3}{4}$ for u in (6), $\frac{9}{16} + 3v^2 = 7$,

$$3v^2 = \tfrac{103}{16},$$

$$v^2 = \tfrac{103}{48}.$$

Extract the root, $v = \pm \frac{1}{4}\sqrt{10\frac{2}{3}}$.

Since $x = u + v$, substitute $\frac{5}{2}$ for u and $\pm \frac{1}{2}$ for v,

$$x = \tfrac{5}{2} + (\pm \tfrac{1}{2}),$$

$$x = 3 \text{ or } 2.$$

Substitute value of $-\frac{3}{4}$ for u, and $\pm \frac{1}{4}\sqrt{10\frac{2}{3}}$ for v,

$$x = -\tfrac{3}{4} \pm \tfrac{1}{4}\sqrt{10\tfrac{2}{3}},$$

$$x = \tfrac{1}{4}(-3 \pm \sqrt{10\tfrac{2}{3}}).$$

Since $y = u - v$, substitute $\frac{5}{2}$ for u, and $\pm \frac{1}{2}$ for v,

$$y = \tfrac{5}{2} - (\pm \tfrac{1}{2}),$$

$$y = 2 \text{ or } 3.$$

Substitute $-\frac{3}{4}$ for u, and $\pm \frac{1}{4}\sqrt{10\frac{2}{3}}$ for v,

$$y = -\tfrac{3}{4} - (\pm \sqrt{10\tfrac{2}{3}}),$$

$$y = \tfrac{1}{4}(-3 \mp \sqrt{10\tfrac{2}{3}}).$$

36.

$$x^5 - y^5 = 3093 \quad (1)$$

$$x - y = 3 \quad (2)$$

Let $x = u + v$, and $y = u - v$.

From (2), $u + v - u + v = 3$,

$$2v = 3.$$

$$\therefore v = \tfrac{3}{2}.$$

From (1), $u^5+5u^4v+10u^3v^2+10u^2v^3+5uv^4+v^5$
$-(u^5-5u^4v+10u^3v^2-10u^2v^3+5uv^4-v^5) = 3093.$

Transpose and combine, $10u^4v+20u^2v^3+2v^5 = 3093.$

Substitute value of v, $\dfrac{30u^4}{2} + \dfrac{540u^2}{8} + \dfrac{243}{16} = 3093.$

Simplify, $240u^4 + 1080u^2 = 49245.$

Divide by 15, $16u^4 + 72u^2 = 3283.$

Complete the square, $16u^4 + (\ ) + 81 = 3364.$

Extract the root, $4u^2 + 9 = \pm 58,$

$$u^2 = \tfrac{49}{4} \text{ or } -\tfrac{67}{4}.$$

$$\therefore u = \pm \tfrac{7}{2} \text{ or } \pm \tfrac{1}{2}\sqrt{-67},$$

$$x = u + v = 5, -2, \text{ or } \tfrac{1}{2}(3 \pm \sqrt{-67}),$$

$$y = u - v = 2, -5, \text{ or } \tfrac{1}{2}(-3 \mp \sqrt{-67}).$$

37.

$$\tfrac{3}{5}(x-1) - \tfrac{2}{3}(x+1)(y-1) = -11 \quad (1)$$

$$\tfrac{1}{3}(y+2) = \tfrac{1}{4}(x+2) \quad (2)$$

From (1), $9x - 9 - 10xy - 10y + 10x + 10 = -165,$

or $19x - 10xy - 10y = -166 \quad (3)$

From (2), $4y + 8 = 3x + 6.$

$$\therefore y = \frac{3x-2}{4} \quad (4)$$

Substitute value of y in (3),

$$19x - 10x\left(\frac{3x-2}{4}\right) - 10\left(\frac{3x-2}{4}\right) = -166,$$

$$76x - 30x^2 + 20x - 30x + 20 = -664,$$

$$-30x^2 + 66x = -684,$$

$$5x^2 - 11x = 144.$$

Complete the square, $100x^2 - (\ ) + (11)^2 = 2401,$

$$10x - 11 = \pm 49,$$

$$10x = 60 \text{ or } -38.$$

$$\therefore x = 6 \text{ or } -3\tfrac{4}{5}.$$

Substitute values of x in (4), $y = 4 \text{ or } -3\tfrac{7}{10}.$

11.

$$x^2 + 3xy + y^2 = 1 \quad (1)$$

$$3x^2 + xy + 3y^2 = 13 \quad (2)$$

Subtract (1) from (2), $2x^2 - 2xy + 2y^2 = 12.$

Divide by 2, $x^2 - xy + y^2 = 6 \quad (3)$

(1) is $x^2 + 3xy + y^2 = 1$

Subtract, $-4xy = 5 \quad (4)$

Add $4 \times$ (1) to (4), $4x^2 + 8xy + 4y^2 = 9 \quad (5)$

Extract the root, $2x + 2y = \pm 3.$

Divide by 2, $x + y = \pm \frac{3}{2} \quad (6)$

Add $\frac{1}{4}$ of (4) to (3), $x^2 - 2xy + y^2 = \frac{29}{4},$

$$x - y = \pm \tfrac{1}{2}\sqrt{29} \quad (7)$$

Add (6) and (7), $2x = \pm \frac{3}{2} \pm \frac{1}{2}\sqrt{29}.$

$$\therefore x = \tfrac{1}{4}(\pm 3 \pm \sqrt{29}).$$

Subtract (7) from (6), $2y = \pm \frac{3}{2} \mp \frac{1}{2}\sqrt{29}.$

$$\therefore y = \tfrac{1}{4}(\pm 3 \mp \sqrt{29}.)$$

12.

$$x^2 - 2xy + 3y^2 = 1\tfrac{3}{5} \quad (1)$$

$$x^2 + xy - y^2 = \tfrac{1}{5} \quad (2)$$

Substitute vx for y.

From (1), $x^2 - 2vx^2 + 3v^2x^2 = \frac{11}{5}.$

From (2), $x^2 + vx^2 - v^2x^2 = \frac{1}{5}.$

Whence $$x^2 = \frac{11}{9 - 18v + 27v^2} \quad (3)$$

and $$x^2 = \frac{1}{9 + 9v - 9v^2} \quad (4)$$

$$\therefore \frac{11}{9 - 18v + 27v^2} = \frac{1}{9 + 9v - 9v^2}.$$

$$99 + 99v - 99v^2 = 9 - 18v + 27v^2,$$

$$-126v^2 + 117v = -90.$$

Divide by -9, $14v^2 - 13v = 10.$

Complete the square, $784v^2 - (\ ) + 169 = 729.$

Extract the root, $28v - 13 = \pm 27,$

$$28v = 40 \text{ or } -14.$$

$$\therefore v = \tfrac{10}{7} \text{ or } -\tfrac{1}{2}.$$

Substitute value of v in (4), $x^2 = \frac{49}{171}$ or $\frac{4}{9}$.

$$\therefore x = \pm \tfrac{7}{3}\sqrt{\tfrac{1}{19}} \text{ or } \pm \tfrac{2}{3},$$

and $y = \pm \frac{10}{3}\sqrt{\frac{1}{19}}$ or $\mp \frac{1}{3}$.

13. $x+y=a$ (1)

$4xy=a^2-4b^2$ (2)

Square (1),

$x^2+2xy+y^2=a^2$ (3)

(1) is $4xy=a^2-4b^2$

Subt., $x^2-2xy+y^2=4b^2$ (4)

Extract root, $x-y=\pm 2b$ (5)

Add (5) and (1), $2x=a\pm 2b$.

$\therefore x=\frac{a}{2}\pm b.$

Subtract (5) from (1),

$2y=a\mp 2b.$

$\therefore y=\frac{a}{2}\mp b.$

14. $x-y=1$ (1)

$\frac{x}{y}+\frac{y}{x}=2\frac{1}{6}.$ (2)

In (1), $x=y+1.$

Substitute in (2),

$$\frac{y+1}{y}+\frac{y}{y+1}=\frac{13}{6},$$

$6y^2+12y+6+6y^2=13y^2+13y,$

$y^2+y=6.$

Complete the square,

$4y^2+(\ )+1=25,$

$2y+1=\pm 5.$

$\therefore y=2 \text{ or } -3.$

$\therefore x=3 \text{ or } -2.$

15.

$x^2+9xy=340$ (1)

$7xy-y^2=171$ (2)

Subtract (2) from (1), $x^2+2xy+y^2=169,$

$x+y=\pm 13$ (3)

$\therefore x=13-y \text{ or } -(13+y).$

Substitute in (1) the first value of x,

$(13-y)^2+9(13-y)y=340,$

$169-26y+y^2+117y-9y^2=340,$

$8y^2-91y=171.$

Complete the square,

$256y^2-(\ )+(91)^2=2809,$

$16y-91=\pm 53.$

$\therefore y=9 \text{ or } 2\frac{3}{8}$ (4)

Substitute in (1) the second value of x,

$(13+y)^2-9(13+y)y=340,$

$169+26y+y^2-117y-9y^2=340,$

$8y^2+91y=-171.$

Whence, $y=-9 \text{ or } -2\frac{3}{8}.$

Substitute values of y in (3), $x=\pm 4 \text{ or } \pm 10\frac{5}{8}.$

11.

$$x^2 + 3xy + y^2 = 1 \quad (1)$$

$$3x^2 + xy + 3y^2 = 13 \quad (2)$$

Subtract (1) from (2), $2x^2 - 2xy + 2y^2 = 12.$

Divide by 2, $x^2 - xy + y^2 = 6 \quad (3)$

(1) is $x^2 + 3xy + y^2 = 1$

Subtract, $-4xy = 5 \quad (4)$

Add $4 \times$ (1) to (4), $4x^2 + 8xy + 4y^2 = 9 \quad (5)$

Extract the root, $2x + 2y = \pm 3.$

Divide by 2, $x + y = \pm \frac{3}{2} \quad (6)$

Add $\frac{1}{4}$ of (4) to (3), $x^2 - 2xy + y^2 = \frac{29}{4}.$

$$x - y = \pm \tfrac{1}{2}\sqrt{29} \quad (7)$$

Add (6) and (7), $2x = \pm \frac{3}{2} \pm \frac{1}{2}\sqrt{29}.$

$$\therefore x = \tfrac{1}{4}(\pm 3 \pm \sqrt{29}).$$

Subtract (7) from (6), $2y = \pm \frac{3}{2} \mp \frac{1}{2}\sqrt{29}.$

$$\therefore y = \tfrac{1}{4}(\pm 3 \mp \sqrt{29}.)$$

12.

$$x^2 - 2xy + 3y^2 = 1\tfrac{3}{5} \quad (1)$$

$$x^2 + xy - y^2 = \tfrac{1}{5} \quad (2)$$

Substitute vx for y.

From (1), $x^2 - 2vx^2 + 3v^2x^2 = \frac{11}{5}.$

From (2), $x^2 + vx^2 - v^2x^2 = \frac{1}{5}.$

Whence $$x^2 = \frac{11}{9 - 18v + 27v^2} \quad (3)$$

and $$x^2 = \frac{1}{9 + 9v - 9v^2} \quad (4)$$

$$\therefore \frac{11}{9 - 18v + 27v^2} = \frac{1}{9 + 9v - 9v^2}.$$

$$99 + 99v - 99v^2 = 9 - 18v + 27v^2,$$

$$-126v^2 + 117v = -90.$$

Divide by -9, $14v^2 - 13v = 10.$

Complete the square, $784v^2 - (\ ) + 169 = 729.$

Extract the root, $28v - 13 = \pm 27,$

$$28v = 40 \text{ or } -14.$$

$$\therefore v = \tfrac{10}{7} \text{ or } -\tfrac{1}{2}.$$

Substitute value of v in (4), $x^2 = \frac{49}{171}$ or $\frac{4}{9}$.

$$\therefore x = \pm \tfrac{7}{3}\sqrt{\tfrac{1}{19}} \text{ or } \pm \tfrac{2}{3},$$

and $y = \pm \frac{10}{3}\sqrt{\frac{1}{19}}$ or $\mp \frac{1}{3}$.

13. $x+y=a$ (1)

$4xy=a^2-4b^2$ (2)

Square (1), $x^2+2xy+y^2=a^2$ (3)

(1) is $4xy=a^2-4b^2$

Subt., $x^2-2xy+y^2=4b^2$ (4)

Extract root, $x-y=\pm 2b$ (5)

Add (5) and (1), $2x=a\pm 2b$.

$\therefore x=\frac{a}{2}\pm b.$

Subtract (5) from (1),

$2y=a\mp 2b.$

$\therefore y=\frac{a}{2}\mp b.$

14. $x-y=1$ (1)

$\frac{x}{y}+\frac{y}{x}=2\frac{1}{6}.$ (2)

In (1), $x=y+1.$

Substitute in (2),

$$\frac{y+1}{y}+\frac{y}{y+1}=\frac{13}{6},$$

$6y^2+12y+6+6y^2=13y^2+13y,$

$y^2+y=6.$

Complete the square,

$4y^2+(\ )+1=25,$

$2y+1=\pm 5.$

$\therefore y=2 \text{ or } -3.$

$\therefore x=3 \text{ or } -2.$

15.

$x^2+9xy=340$ (1)

$7xy-y^2=171$ (2)

Subtract (2) from (1), $x^2+2xy+y^2=169,$

$x+y=\pm 13$ (3)

$\therefore x=13-y \text{ or } -(13+y).$

Substitute in (1) the first value of x,

$(13-y)^2+9(13-y)y=340,$

$169-26y+y^2+117y-9y^2=340,$

$8y^2-91y=171.$

Complete the square,

$256y^2-(\ )+(91)^2=2809,$

$16y-91=\pm 53.$

$\therefore y=9 \text{ or } 2\frac{3}{8}$ (4)

Substitute in (1) the second value of x,

$(13+y)^2-9(13+y)y=340,$

$169+26y+y^2-117y-9y^2=340,$

$8y^2+91y=-171.$

Whence, $y=-9 \text{ or } -2\frac{3}{8}.$

Substitute values of y in (3), $x=\pm 4 \text{ or } \pm 10\frac{5}{8}.$

16. $x+y=6$ (1)
$x^3+y^3=72$ (2)

Divide (2) by (1),
$x^2-xy+y^2=12$ (3)
Sq.(1), $x^2+2xy+y^2=36$ (4)
Subtract, $-3xy=-24$
$\therefore xy=8$ (5)
Subtract (5) from (3),
$x^2-2xy+y^2=4$.
Extract root, $x-y=\pm 2$ (6)
Add (6) and (1), $2x=8$ or 4.
$\therefore x=4$ or 2.
Subtract (6) from (1),
$2y=4$ or 8.
$\therefore y=2$ or 4.

17. $3xy+2x+y=485$ (1)
$3x-2y=0$ (2)

In (2), $x=\frac{2y}{3}$ (3)
Substitute value of x in (1),
$\frac{6y^2}{3}+\frac{4y}{3}+y=485$,
$6y^2+7y=1455$.
Complete the square,
$144y^2+(\ )+49=34969$,
$12y+7=\pm 187$.
$12y=180$ or -194.
$\therefore y=15$ or $-16\frac{1}{3}$.
Substitute value of y in (3),
$x=10$ or $-10\frac{7}{9}$.

18. $x-y=1$ (1)
$x^3-y^3=19$ (2)

Divide (2) by (1),
$x^2+xy+y^2=19$ (3)
Sq. (1), $x^2-2xy+y^2=1$
Subt., $3xy=18$
$\therefore xy=6$ (4)
Add (4) and (3),
$x^2+2xy+y^2=25$.
Extract root, $x+y=\pm 5$ (5)
Add (5) and (1), $2x=6$ or -4.
$\therefore x=3$ or -2.
Subtract (1) from (5),
$2y=4$ or -6.
$\therefore y=2$ or -3.

19. $x^3+y^3=2728$ (1)
$x^2-xy+y^2=124$ (2)

Divide (1) by (2),
$x+y=22$ (3)
Square (3),
$x^2+2xy+y^2=484$ (4)
Subtract (4) from (2),
$-3xy=-360$.
Divide by 3, $-xy=-120$ (5)
Add (5) and (2),
$x^2-2xy+y^2=4$.
Extract root, $x-y=\pm 2$ (6)
Add (3) and (6), $2x=24$ or 20.
$\therefore x=12$ or 10.
Subtract (6) from (3),
$2y=20$ or 24.
$\therefore y=10$ or 12.

20.

$x+y=a$ (1)
$x^2+y^2=b^2$ (2)
Square (1), $x^2+2xy+y^2=a^2$ (3)
Subtract (2), $x^2+y^2=b^2$
$2xy=a^2-b^2$ (4)
Subtract (4) from (2), $x^2-2xy+y^2=a^2+2b^2$ (5)
Extract root, $x-y=\pm\sqrt{a^2+2b^2}$ (6)
From (1) and (6),
$2x=a\pm\sqrt{a^2+2b^2}$.
$\therefore x=\frac{1}{2}(a\pm\sqrt{a^2+2b^2})$.
$2y=a\mp\sqrt{a^2+2b^2}$.
$\therefore y=\frac{1}{2}(a\mp\sqrt{a^2+2b^2})$.

21.

$$x^2 - y^2 = 0 \quad (1)$$
$$3x^2 - 4xy + 5y^2 = 9 \quad (2)$$

From (1), $x^2 = y^2$.
$\therefore y = \pm x$.

Hence, in (2), $3x^2 \pm 4x^2 + 5x^2 = 9$,
$12x^2$ or $4x^2 = 9$.
$\therefore x = \pm \frac{1}{2}\sqrt{3}$ or $\pm \frac{3}{2}$,
and $y = \pm \frac{1}{2}\sqrt{3}$ or $\pm \frac{3}{2}$.

22.

$$\frac{x+y}{x-y} + \frac{x-y}{x+y} = \frac{10}{3} \quad (1)$$
$$x^2 + y^2 = 45 \quad (2)$$

From (1), $3(x^2+2xy+y^2)+3(x^2-2xy+y^2) = 10x^2 - 10y^2$,
$3x^2 + 6xy + 3y^2 + 3x^2 - 6xy + 3y^2 = 10x^2 - 10y^2$,
$-4x^2 + 16y^2 = 0$,
$-x^2 + 4y^2 = 0 \quad (3)$

Add (2) and (3), $5y^2 = 45$.
$\therefore y = \pm 3$.

Substitute values of y in (2), $x^2 + 9 = 45$.
$\therefore x = \pm 6$.

23.

$$\frac{1}{x} + \frac{1}{y} = 5$$
$$\frac{1}{x+1} + \frac{1}{y+1} = \frac{17}{12}$$

Clear of fractions and unite, $x + y = 5xy \quad (1)$
$5x + 5y = 7 - 17xy \quad (2)$

Divide (2) by (1), $5 = \frac{7 - 17xy}{5xy} \quad (3)$

$25xy = 7 - 17xy \quad (4)$
$42xy = 7$,
$xy = \frac{1}{6} \quad (5)$

From (1), $x + y = \frac{5}{6} \quad (6)$

Square (6), $x^2 + 2xy + y^2 = \frac{25}{36}$
Multiply (5) by 4, $4xy = \frac{24}{36}$

Subtract, $x^2 - 2xy + y^2 = \frac{1}{36}$
$x - y = \pm \frac{1}{6} \quad (7)$

Add (7) and (6), $2x = 1$ or $\frac{2}{3}$.
$\therefore x = \frac{1}{2}$ or $\frac{1}{3}$.

Subtract (7) from (6). $2y = \frac{2}{3}$ or 1.
$\therefore y = \frac{1}{3}$ or $\frac{1}{2}$.

24.

$$x^2 - xy + y^2 = 7 \quad (1)$$
$$x^4 + x^2y^2 + y^4 = 133 \quad (2)$$

Divide (2) by (1), $x^2 + xy + y^2 = 19$ (3)

Subtract (1) from (3), $2xy = 12.$

$$\therefore xy = 6 \quad (4)$$

Add (4) to (3), and subtract (4) from (1),

$$x^2 + 2xy + y^2 = 25,$$
$$x^2 - 2xy + y^2 = 1.$$

Whence $x + y = \pm 5,$

$x - y = \pm 1.$

$\therefore x = \pm 3$ or $\pm 2,$

and $y = \pm 2$ or $\pm 3.$

25.

$$x + y = 4 \quad (1)$$
$$x^4 + y^4 = 82 \quad (2)$$

Put $u + v$ for x, and $u - v$ for y.

(1) becomes $2u = 4.$

$\therefore u = 2.$

(2) becomes $u^4 + 6u^2v^2 + v^4 = 41$ (3)

Substitute 2 for u in (3), $16 + 24v^2 + v^4 = 41,$

$v^4 + 24v^2 = 25.$

Complete the square, $v^4 + (\ ) + 144 = 169,$

$v^2 + 12 = \pm 13,$

$v^2 = 1$ or $-25.$

$\therefore v = \pm 1$ or $\pm\sqrt{-25}.$

$\therefore x = 3, 1,$ or $2 \pm \sqrt{-25},$

and $y = 1, 3,$ or $2 \mp \sqrt{-25}.$

26.

$$x^3 - y^3 = a^3 \quad (1)$$
$$x - y = a \quad (2)$$

Divide (1) by (2), $x^2 + xy + y^2 = a^2$ (3)

Square (2), $x^2 - 2xy + y^2 = a^2$

Subtract, $3xy = 0$

$$xy = 0 \quad (4)$$

Add (3) and (4), $x^2 + 2xy + y^2 = a^2.$

Extract the root, $x + y = \pm a$ (5)

Subtract (2) from (5), $2y = 0$ or $-2a.$

$\therefore y = 0$ or $-a.$

Add (2) and (5), $2x = 2a$ or $0.$

$\therefore x = a$ or $0.$

27.

$$x^2 - xy = a^2 + b^2 \quad (1)$$
$$xy - y^2 = 2ab \quad (2)$$

Subtract (2) from (1), $x^2 - 2xy + y^2 = a^2 - 2ab + b^2$.

Extract root, $x - y = \pm(a - b)$.

(1) is $x(x - y) = a^2 + b^2$.

Substitute value of $x - y$ in (1), $\pm x(a - b) = a^2 + b^2$.

$$\therefore x = \pm\frac{a^2 + b^2}{a - b}.$$

(2) is $y(x - y) = 2ab$.

Substitute value of $(x - y)$ in (2),

$$\pm y(a - b) = 2ab.$$
$$\therefore y = \pm\frac{2ab}{a - b}.$$

28.

$$x^2 - y^2 = 4ab \quad (1)$$
$$xy = a^2 - b^2 \quad (2)$$

In (2), $y = \dfrac{a^2 - b^2}{x}$.

Substitute value of y in (1), $x^2 - \dfrac{(a^2-b^2)^2}{x^2} = 4ab$,

$$x^4 - a^4 + 2a^2b^2 - b^4 = 4abx^2,$$
$$x^4 - 4abx^2 = a^4 - 2a^2b^2 + b^4.$$

Complete the square, $x^4 - (\ ) + 4a^2b^2 = a^4 + 2a^2b^2 + b^4$.

Extract root, $x^2 - 2ab = \pm(a^2 + b^2)$,

$$x^2 = \pm(a^2 + 2ab + b^2).$$
$$\therefore x = \pm(a + b).$$

Substitute value of x in (1), $(a + b)^2 - y^2 = 4ab$,

$$y^2 = a^2 - 2ab + b^2.$$
$$\therefore y = \pm(a - b).$$

29.

$$xy = 0 \quad (1)$$
$$x^2 + y^2 = 16 \quad (2)$$

Multiply (1) by 2, $2xy = 0$ (3)

Add (3) and (2), $x^2 + 2xy + y^2 = 16$ (4)

Extract root, $x + y = \pm 4$ (5)

Multiply (1) by 4, $4xy = 0$ (6)

Subtract (6) from (4), $x^2 - 2xy + y^2 = 16$

Extract root, $x - y = \pm 4$ (7)

Add (5) and (7), $2x = \pm 8$ or 0.

$$\therefore x = \pm 4 \text{ or } 0.$$

Subtract (7) from (5), $2y = 0$ or ± 8.

$$\therefore y = 0 \text{ or } \pm 4.$$

30.

$$x^2 + xy + y^2 = 37 \quad (1)$$
$$x^4 + x^2y^2 + y^4 = 481 \quad (2)$$

Divide (2) by (1), $x^2 - xy + y^2 = 13$ (3)

(1) is $x^2 + xy + y^2 = 37$

Subt., $-2xy = -24$

$$\therefore xy = 12 \quad (4)$$

Add (3) and (4), $x^2 - 2xy + y^2 = 1$.

Extract root, $x - y = \pm 1$ (5)

Subtract (4) from (1), $x^2 + 2xy + y^2 = 49$.

Extract root, $x + y = \pm 7$ (6)

Add (5) and (6), $2x = \pm 8$ or ± 6.

$$\therefore x = \pm 4 \text{ or } \pm 3.$$

Subt. (5) fr. (6), $2y = \pm 6$ or ± 8.

$$\therefore y = \pm 3 \text{ or } \pm 4.$$

31.

$$x^2 = ax + by \quad (1)$$
$$y^2 = ay + bx \quad (2)$$

If $x = 0$, y must equal 0.

If $x = y$, and does not equal 0, then $x = a + b$, and $y = a + b$.

If x does not equal y, subtract (2) from (1), and divide by $x - y$.

$$x + y = a - b \quad (3)$$

Add (1) and (2), $x^2 + y^2 = a(x + y) + b(x + y)$.

Substitute $a - b$ for $x + y$, $= a(a - b) + b(a - b)$.

That is, $x^2 + y^2 = a^2 - b^2$ (4)

Square (3), $x^2 + 2xy + y^2 = a^2 - 2ab + b^2$ (5)

Subtract (4) from (5), $2xy = -2ab + 2b^2$ (6)

Subtract (6) from (4), $x^2 - 2xy + y^2 = a^2 + 2ab - 3b^2$.

Extract root, $x - y = \pm\sqrt{a^2 + 2ab - 3b^2}$ (7)

Add (7) and (3), $2x = a - b \pm \sqrt{a^2 + 2ab - 3b^2}$.

$\therefore x = \frac{1}{2}(a - b \pm \sqrt{a^2 + 2ab - 3b^2})$.

Subtract (7) from (3), $2y = a - b \mp \sqrt{a^2 + 2ab - 3b^2}$.

$\therefore y = \frac{1}{2}(a - b \mp \sqrt{a^2 + 2ab - 3b^2})$.

32.

$$x - y - 2 = 0 \quad (1)$$
$$15(x^2 - y^2) = 16xy \quad (2)$$

Transpose (1), $x - y = 2$ (3)

Divide (2) by (3), $15(x + y) = 8xy$,

$$15x + 15y - 8xy = 0 \quad (4)$$

From (1), $x = y + 2$.

Substitute value of x in (4),

$15y + 30 + 15y - 8y^2 - 16y = 0$,

$8y^2 - 14y = 30$.

Complete the square, $64y^2 - (\ ) + (7)^2 = 289$,

$8y - 7 = \pm 17$,

$8y = 24$ or -10.

$\therefore y = 3$ or $-1\frac{1}{4}$.

Substitute value of y in (1). $\therefore x = 5$ or $\frac{3}{4}$.

33.

$$\frac{x+y}{x-y}+\frac{x-y}{x+y}=\frac{89}{40} \quad (1)$$

$$6x=20y+9 \quad (2)$$

Simplify (1), $9x^2-169y^2=0,$

$$9x^2=169y^2 \quad (3)$$

Extract the root, $3x=\pm 13y,$

$$3x\mp 13y=0.$$

Multiply by 2, $6x\mp 26y=0 \quad (4)$

Transpose in (2), $6x-20y=9 \quad (5)$

Subtract (4) from (5), $6y=9,$

or $-46y=9.$

$$\therefore y=1\tfrac{1}{2} \text{ or } -\tfrac{9}{46}.$$

Substitute values of y in (2), $x=6\tfrac{1}{2}$ or $-2\tfrac{7}{46}.$

34.

$$\frac{x}{a}+\frac{y}{b}=1 \quad (1)$$

$$\frac{a}{x}+\frac{b}{y}=4 \quad (2)$$

Simplify (1), $bx+ay=ab \quad (3)$

Simplify (2), $bx+ay=4xy \quad (4)$

$$\therefore 4xy=ab,$$

$$\text{and } y=\frac{ab}{4x}.$$

Substitute value of y in (3), $bx+\frac{a^2b}{4x}=ab.$

Simplify, $4x^2+a^2=4ax.$

Transpose, $4x^2-4ax=-a^2.$

Complete the square, $4x^2-(\ )+a^2=0.$

Extract the root, $2x-a=0.$

$$\therefore x=\frac{a}{2}.$$

Substitute value of x in (3), $y=\frac{b}{2}$

35.

$$x^2 + y^2 = 7 + xy \quad (1)$$

$$x^3 + y^3 = 6xy - 1 \quad (2)$$

Transpose xy in (1), $x^2 - xy + y^2 = 7$ (3)

Divide (2) by (3), $x + y = \frac{6xy - 1}{7}$.

Simplify, $7x + 7y = 6xy - 1$ (4)

Put $u + v$ for x, and $u - v$ for y, in (4),

$$7(u + v) + 7(u - v) = 6(u^2 - v^2) - 1,$$

$$6u^2 - 6v^2 - 14u = 1 \quad (5)$$

Put $u + v$ for x, and $u - v$ for y, in (3),

$$(u + v)^2 - (u^2 - v^2) + (u - v)^2 = 7,$$

$$u^2 + 3v^2 = 7 \quad (6)$$

Multiply (6) by 2, $2u^2 + 6v^2 = 14$ (7)

Add (5) and (7), $8u^2 - 14u = 15$.

Complete the square, $256u^2 - (\ ) + (14)^2 = 676$.

Extract the root, $16u - 14 = \pm 26$,

$$16u = 40 \text{ or } -12,$$

$$u = \tfrac{5}{2} \text{ or } -\tfrac{3}{4}.$$

Substitute $\frac{5}{2}$ for u in (6), $\frac{25}{4} + 3v^2 = 7$,

$$3v^2 = \tfrac{3}{4},$$

$$v^2 = \tfrac{1}{4}.$$

Extract the root, $v = \pm \frac{1}{2}$.

Substitute $-\frac{3}{4}$ for u in (6), $\frac{9}{16} + 3v^2 = 7$,

$$3v^2 = \tfrac{103}{16},$$

$$v^2 = \tfrac{103}{48}.$$

Extract the root, $v = \pm \frac{1}{4}\sqrt{\frac{103}{3}}$.

Since $x = u + v$, substitute $\frac{5}{2}$ for u and $\pm \frac{1}{2}$ for v,

$$x = \tfrac{5}{2} + (\pm \tfrac{1}{2}),$$

$$x = 3 \text{ or } 2.$$

Substitute value of $-\frac{3}{4}$ for u, and $\pm \frac{1}{4}\sqrt{\frac{103}{3}}$ for v,

$$x = -\tfrac{3}{4} \pm \tfrac{1}{4}\sqrt{\tfrac{103}{3}},$$

$$x = \tfrac{1}{4}(-3 \pm \sqrt{\tfrac{103}{3}}).$$

Since $y = u - v$, substitute $\frac{5}{2}$ for u, and $\pm \frac{1}{2}$ for v,

$$y = \tfrac{5}{2} - (\pm \tfrac{1}{2}),$$

$$y = 2 \text{ or } 3.$$

Substitute $-\frac{3}{4}$ for u, and $\pm \frac{1}{4}\sqrt{\frac{103}{3}}$ for v,

$$y = -\tfrac{3}{4} - (\pm \sqrt{\tfrac{103}{3}}),$$

$$y = \tfrac{1}{4}(-3 \mp \sqrt{\tfrac{103}{3}}).$$

36.

$$x^5 - y^5 = 3093 \quad (1)$$

$$x - y = 3 \quad (2)$$

Let $x = u + v$, and $y = u - v$.

From (2), $u + v - u + v = 3$,

$$2v = 3.$$

$$\therefore v = \tfrac{3}{2}.$$

From (1), $u^5+5u^4v+10u^3v^2+10u^2v^3+5uv^4+v^5$
$-(u^5-5u^4v+10u^3v^2-10u^2v^3+5uv^4-v^5) = 3093.$

Transpose and combine, $10u^4v+20u^2v^3+2v^5 = 3093.$

Substitute value of v, $\dfrac{30u^4}{2} + \dfrac{540u^2}{8} + \dfrac{243}{16} = 3093.$

Simplify, $240u^4 + 1080u^2 = 49245.$

Divide by 15, $16u^4 + 72u^2 = 3283.$

Complete the square, $16u^4 + ( ) + 81 = 3364.$

Extract the root, $4u^2 + 9 = \pm 58,$

$$u^2 = \tfrac{49}{4} \text{ or } -\tfrac{67}{4}.$$

$$\therefore u = \pm \tfrac{7}{2} \text{ or } \pm \tfrac{1}{2}\sqrt{-67},$$

$$x = u + v = 5, -2, \text{ or } \tfrac{1}{2}(3 \pm \sqrt{-67}),$$

$$y = u - v = 2, -5, \text{ or } \tfrac{1}{2}(-3 \mp \sqrt{-67}).$$

37.

$$\tfrac{3}{5}(x-1) - \tfrac{3}{2}(x+1)(y-1) = -11 \quad (1)$$

$$\tfrac{1}{3}(y+2) = \tfrac{1}{4}(x+2) \quad (2)$$

From (1), $9x - 9 - 10xy - 10y + 10x + 10 = -165,$

or $19x - 10xy - 10y = -166 \quad (3)$

From (2), $4y + 8 = 3x + 6.$

$$\therefore y = \frac{3x-2}{4} \quad (4)$$

Substitute value of y in (3),

$$19x - 10x\left(\frac{3x-2}{4}\right) - 10\left(\frac{3x-2}{4}\right) = -166,$$

$$76x - 30x^2 + 20x - 30x + 20 = -664,$$

$$-30x^2 + 66x = -684,$$

$$5x^2 - 11x = 144.$$

Complete the square, $100x^2 - ( ) + (11)^2 = 2401,$

$$10x - 11 = \pm 49,$$

$$10x = 60 \text{ or } -38.$$

$$\therefore x = 6 \text{ or } -3\tfrac{4}{5}.$$

Substitute values of x in (4), $y = 4 \text{ or } -3\tfrac{7}{20}.$

38.

$$10x^2 + 15xy = 3ab - 2a^2 \quad (1)$$

$$10y^2 + 15xy = 3ab - 2b^2 \quad (2)$$

Let $ux = y$.

(1) becomes $10x^2 + 15x^2u = 3ab - 2a^2$,

$$x^2 = \frac{3ab - 2a^2}{10 + 15u} \quad (3)$$

(2) becomes $10x^2u^2 + 15x^2u = 3ab - 2b^2$,

$$x^2 = \frac{3ab - 2b^2}{10u^2 + 15u} \quad (4)$$

Equate values of x^2, $\frac{3ab - 2a^2}{10 + 15u} = \frac{3ab - 2b^2}{10u^2 + 15u}$.

Simplify,

$$30abu^2 - 20a^2u^2 - 30a^2u + 30b^2u = 30ab - 20b^2.$$

Divide by 10,

$$3abu^2 - 2a^2u^2 - 3a^2u + 3b^2u = 3ab - 2b^2,$$

or $u^2(3ab - 2a^2) - 3u(a^2 - b^2) = 3ab - 2b^2$.

Complete the square,

$$4u^2(3ab - 2a^2)^2 - (\ ) + 9(a^2 - b^2)^2 = 9a^4 - 24a^3b + 34a^2b^2 - 24ab^3 + 9b^4.$$

Extract the root,

$$2u(3ab - 2a^2) - 3(a^2 - b^2) = \pm(3a^2 - 4ab + 3b^2),$$

$$2u(3ab - 2a^2) = 6a^2 - 4ab \text{ or } 4ab - 6b^2.$$

$$\therefore u = \frac{3a - 2b}{3b - 2a} \text{ or } -\frac{b}{a}$$

Substitute value of $\frac{3a - 2b}{3b - 2a}$ for u in (3),

$$x^2 = \frac{(3b - 2a)^2}{25}.$$

Extract the root, $x = \pm\left(\frac{3b - 2a}{5}\right)$.

Substitute $-\frac{b}{a}$ for u in (3), $x^2 = -\frac{a^2}{5}$.

$$\therefore x = \pm a\sqrt{-\tfrac{1}{5}}.$$

Since $ux = y$,

$$y = \frac{3a - 2b}{3b - 2a} \times \pm\left(\frac{3b - 2a}{5}\right).$$

$$\therefore y = \pm\frac{3a - 2b}{5},$$

$$\text{or } y = -\frac{b}{a} \times (\pm a\sqrt{-\tfrac{1}{5}}).$$

$$\therefore y = \mp b\sqrt{-\tfrac{1}{5}}.$$

39.

$$(2x+3y)^2-2(2x+3y)=8 \qquad (1)$$

$$x^2-y^2=21 \qquad (2)$$

Add 1 to both sides of (1),

$$(2x+3y)^2-2(2x+3y)+1=9.$$

Extract the root. $(2x+3y)-1=\pm 3,$

$$2x+3y=4 \text{ or } -2 \qquad (3)$$

$$\therefore x=\frac{4-3y}{2} \text{ or } -\frac{2+3y}{2},$$

$$x^2=\frac{16-24y+9y^2}{4} \text{ or } \frac{4+12y+9y^2}{4}$$

Substitute value of x^2 in (2),

$$\frac{16-24y+9y^2}{4}-y^2=21,$$

$$5y^2-24y=68,$$

$$100y^2-(\ )+576=1936,$$

$$10y-24=\pm 44,$$

$$10y=68 \text{ or } -20.$$

$$\therefore y=6\tfrac{4}{5} \text{ or } -2.$$

Substitute second value of x^2 in (2),

$$\frac{4+12y+9y^2}{4}-y^2=21,$$

$$5y^2+12y=80,$$

$$100y^2+(\ )+144=1744,$$

$$10y+12=\pm 4\sqrt{109},$$

$$10y=-12\pm 4\sqrt{109}.$$

$$\therefore y=-1\tfrac{1}{5}\pm\tfrac{2}{5}\sqrt{109}$$

$$=\tfrac{2}{5}(-3\pm\sqrt{109}).$$

Substitute first values of y in (3), $x=-8\frac{1}{5},\ 5,\ \frac{1}{5}(4\mp 3\sqrt{109}).$

16. $x+y=6$ (1)
$x^3+y^3=72$ (2)

Divide (2) by (1),
$x^2-xy+y^2=12$ (3)
Sq. (1), $x^2+2xy+y^2=36$ (4)
Subtract, $-3xy=-24$
$\therefore xy=8$ (5)
Subtract (5) from (3),
$x^2-2xy+y^2=4$.
Extract root, $x-y=\pm 2$ (6)
Add (6) and (1), $2x=8$ or 4.
$\therefore x=4$ or 2.
Subtract (6) from (1),
$2y=4$ or 8.
$\therefore y=2$ or 4.

17. $3xy+2x+y=485$ (1)
$3x-2y=0$ (2)

In (2), $x=\frac{2y}{3}$ (3)

Substitute value of x in (1),
$\frac{6y^2}{3}+\frac{4y}{3}+y=485$,
$6y^2+7y=1455$.
Complete the square,
$144y^2+(\ )+49=34969$,
$12y+7=\pm 187$.
$12y=180$ or -194.
$\therefore y=15$ or $-16\frac{1}{3}$.
Substitute value of y in (3),
$x=10$ or $-10\frac{7}{9}$.

18. $x-y=1$ (1)
$x^3-y^3=19$ (2)

Divide (2) by (1),
$x^2+xy+y^2=19$ (3)
Sq. (1), $x^2-2xy+y^2=1$
Subt., $3xy=18$
$\therefore xy=6$ (4)
Add (4) and (3),
$x^2+2xy+y^2=25$.
Extract root, $x+y=\pm 5$ (5)
Add (5) and (1), $2x=6$ or -4.
$\therefore x=3$ or -2.
Subtract (1) from (5),
$2y=4$ or -6.
$\therefore y=2$ or -3.

19. $x^3+y^3=2728$ (1)
$x^3-xy+y^2=124$ (2)

Divide (1) by (2),
$x+y=22$ (3)
Square (3),
$x^2+2xy+y^2=484$ (4)
Subtract (4) from (2),
$-3xy=-360$.
Divide by 3, $-xy=-120$ (5)
Add (5) and (2),
$x^2-2xy+y^2=4$.
Extract root, $x-y=\pm 2$ (6)
Add (3) and (6), $2x=24$ or 20.
$\therefore x=12$ or 10.
Subtract (6) from (3),
$2y=20$ or 24.
$\therefore y=10$ or 12.

20.

$x+y=a$ (1)
$x^2+y^2=b^2$ (2)
Square (1), $x^2+2xy+y^2=a^2$ (3)
Subtract (2), $x^2+y^2=b^2$
$2xy=a^2-b^2$ (4)
Subtract (4) from (2), $x^2-2xy+y^2=a^2+2b^2$ (5)
Extract root, $x-y=\pm\sqrt{a^2+2b^2}$ (6)
From (1) and (6), $2x=a\pm\sqrt{a^2+2b^2}$.
$\therefore x=\frac{1}{2}(a\pm\sqrt{a^2+2b^2})$.
$2y=a\mp\sqrt{a^2+2b^2}$.
$\therefore y=\frac{1}{2}(a\mp\sqrt{a^2+2b^2})$.

21.

$$x^2 - y^2 = 0 \quad (1)$$
$$3x^2 - 4xy + 5y^2 = 9 \quad (2)$$

From (1), $x^2 = y^2$.
$\therefore y = \pm x$.

Hence, in (2), $3x^2 \pm 4x^2 + 5x^2 = 9$,
$12x^2$ or $4x^2 = 9$.
$\therefore x = \pm \frac{1}{2}\sqrt{3}$ or $\pm \frac{3}{2}$,
and $y = \pm \frac{1}{2}\sqrt{3}$ or $\pm \frac{3}{2}$.

22.

$$\frac{x+y}{x-y} + \frac{x-y}{x+y} = \frac{10}{3} \quad (1)$$
$$x^2 + y^2 = 45 \quad (2)$$

From (1), $3(x^2+2xy+y^2)+3(x^2-2xy+y^2) = 10x^2 - 10y^2$,
$3x^2 + 6xy + 3y^2 + 3x^2 - 6xy + 3y^2 = 10x^2 - 10y^2$,
$-4x^2 + 16y^2 = 0$,
$-x^2 + 4y^2 = 0 \quad (3)$

Add (2) and (3), $5y^2 = 45$.
$\therefore y = \pm 3$.

Substitute values of y in (2), $x^2 + 9 = 45$.
$\therefore x = \pm 6$.

23.

$$\frac{1}{x} + \frac{1}{y} = 5$$
$$\frac{1}{x+1} + \frac{1}{y+1} = \frac{17}{12}$$

Clear of fractions and unite, $x + y = 5xy \quad (1)$
$5x + 5y = 7 - 17xy \quad (2)$

Divide (2) by (1), $5 = \frac{7 - 17xy}{5xy} \quad (3)$

$25xy = 7 - 17xy \quad (4)$
$42xy = 7$,
$xy = \frac{1}{6} \quad (5)$

From (1), $x + y = \frac{5}{6} \quad (6)$

Square (6), $x^2 + 2xy + y^2 = \frac{25}{36}$
Multiply (5) by 4, $4xy = \frac{24}{36}$

Subtract, $x^2 - 2xy + y^2 = \frac{1}{36}$
$x - y = \pm \frac{1}{6} \quad (7)$

Add (7) and (6), $2x = 1$ or $\frac{2}{3}$.
$\therefore x = \frac{1}{2}$ or $\frac{2}{3}$.

Subtract (7) from (6). $2y = \frac{2}{3}$ or 1.
$\therefore y = \frac{1}{3}$ or $\frac{1}{2}$.

Let x = rate of the faster train,
and y = rate of the slower train.
Then $x + y : x - y :: 30 : 2$.
By composition and division,
$2x : 2y :: 32 : 28$.
$\therefore x : y :: 8 : 7$.

23. A and B trade with different sums. A gains \$200 and B loses \$50, and now A's stock : B's :: 2 : $\frac{1}{2}$. But, if A had gained \$100 and B lost \$85, their stocks would have been as 15 : $3\frac{1}{4}$. Find the original stock of each.

Let x = original stock of A,
and y = original stock of B.
Then $x + 200 : y - 50 :: 2 : \frac{1}{2}$.
Simplify, $x + 200 = 4y - 200$,
$x - 4y = -400$ (1)
Also, $x + 100 : y - 85 :: 15 : 3\frac{1}{4}$.
Simplify, $13x + 1300 = 60y - 5100$,
$13x - 60y = -6400$ (2)
Multiply (1) by 15, $15x - 60y = -6000$ (3)
Subtract (2) from (3), $2x = 400$.
$\therefore x = 200$.
$200 - 4y = -400$.
$\therefore y = 150$.

24. A quantity of milk is increased by watering in the ratio 4 : 5, and then 3 gallons are sold; the remainder is mixed with 3 quarts of water, and is increased in the ratio 6 : 7. How many gallons of milk were there at first?

Let x = number of quarts of milk at first,
and y = number of quarts of water put in at first.
Then $x + y$ = number of quarts of mixture after watering.
$\therefore x : x + y :: 4 : 5$,
or $\frac{x}{x+y} = \frac{4}{5}$,
$5x = 4x + 4y$,
$x - 4y = 0$.

$x+y-12$ = number of quarts in remainder before watering.

$x+y-9$ = number of quarts in remainder after watering.

$$\therefore \frac{x+y-12}{x+y-9}=\frac{6}{7}$$

$$7x+7y-84=6x+6y-54.$$

$$x-4y=0 \qquad (1)$$

$$x+y=30 \qquad (2)$$

$$5y=30$$

$$\therefore y=6.$$

Substitute value of y in (1),

$$x-24=0.$$

$$\therefore x=24 \text{ quarts or } 6 \text{ gallons.}$$

25. In a mile race between a bicycle and a tricycle their rates were as 5 : 4. The tricycle had half a minute start, but was beaten by 176 yards. Find the rates of each.

Let x = number of yards bicycle goes per minute,

and y = number of yards tricycle goes per minute.

$$x:y::5:4,$$

$$4x=5y.$$

$$\therefore x=\frac{5y}{4}.$$

$\frac{1584}{y}-\frac{1}{2}$ = number of minutes tricycle was going after bicycle started,

$\frac{1760}{x}$ = number of minutes bicycle was going.

$$\frac{1584}{y}-\frac{1}{2}=\frac{1760}{x},$$

$$1584x-\frac{xy}{2}=1760y,$$

$$3168x-xy=3520y.$$

Substitute $\frac{5y}{4}$ for x, $\qquad 5y^2=1760y.$

$$\therefore y=352,$$

and $x=440.$

26. The time which an express-train takes to travel 180 miles is to that taken by an ordinary train as 9 : 14. The ordinary train loses as much time from stopping as it would take to travel 30 miles; the express-train loses only half as much time as the other by stopping, and travels 15 miles an hour faster. What are their respective rates?

Let y = number of miles ordinary train goes per hour,
and $y + 15$ = number of miles express-train goes per hour.
Then $\frac{180+30}{y}$ = number of hours required for ordinary train.
Also, $\frac{180}{y+15}+\frac{15}{y}$ = number of hours required for express-train.

$$\therefore \frac{180+30}{y} : \frac{180}{y+15}+\frac{15}{y} :: 14 : 9.$$

$$\frac{1890}{y} = \frac{2520}{y+15} + \frac{210}{y},$$

$$\frac{1680}{y} = \frac{2520}{y+15},$$

$$1680y + 25200 = 2520y,$$

$$840y = 25200.$$

$$\therefore y = 30,$$

and $y + 15 = 45.$

27. A line is divided into two parts in the ratio 2 : 3, and into two parts in the ratio 3 : 4; the distance between the points of section is 2. Find the length of the line.

Let x = one part,
and y = the other part.

$$\therefore x : y :: 2 : 3.$$

$$3x = 2y,$$

$$3x - 2y = 0 \qquad (1)$$

Also, $x + 2 : y - 2 :: 3 : 4,$

$$4x - 3y = -14 \qquad (2)$$

Multiply (1) by 3, $9x - 6y = 0$
Multiply (2) by 2, $8x - 6y = -28$

Subtract, $x = 28$
Substitute value of x in (1), $2y = 84,$

$$y = 42.$$

$$\therefore x + y = 70.$$

28. When a, b, c, d are proportional and unequal, show that no number x can be found such that $a+x$, $b+x$, $c+x$, $d+x$ shall be proportionals.

If $a:b::c:d$, $\quad ad=bc$;

and if $\quad a+x:b+x::c+x:d+x$,

$$ad+dx+ax+x^2=bc+cx+bx+x^2.$$

Transpose, and cancel x^2,

$$ax-bx-cx+dx=bc-ad.$$

But $\quad ad=bc.$

$$\therefore\ x(a-b-c+d)=0.$$

$$\therefore\ x=0.$$

Exercise 108.

1. If $A \propto B$, and $A=4$ when $B=5$, find A when $B=12$.

Here $\quad A=mb,$ or $m=\dfrac{A}{B}$ $\quad\therefore\ m=\frac{4}{5}.$

And if $\frac{4}{5}$ and 12 are substituted for m and B,

$$A=\tfrac{4}{5}\times 12=9\tfrac{3}{5}.$$

2. If $A \propto B$, and when $B=\frac{1}{2}$, $A=\frac{1}{3}$, find A when $B=\frac{1}{3}$.

Here $\quad A=mB,$ or $m=\dfrac{A}{B}$ $\quad\therefore\ m=\frac{2}{3}.$

Substitute $\frac{2}{3}$ for m, and $\frac{1}{3}$ for B,

$$A=\tfrac{2}{3}\times\tfrac{1}{3}=\tfrac{2}{9}.$$

3. If A vary jointly as B and C, and 3, 4, 5 be simultaneous values of A, B, C, find A when $B=C=10$.

Here $\quad A=mBC,$ or $m=\dfrac{A}{BC}.$

Substitute 3 for A, 4 and 5 for B and C,

$$m=\tfrac{3}{20}.$$

Then, $\quad A=\frac{3}{20}\times 10\times 10=15.$

4. If $\propto \dfrac{1}{B}$, and when $A=10$, $B=2$, find the value of B when $A=4$.

Here $\quad A=\dfrac{m}{B},$ or $m=AB.$ $\quad\therefore\ m=20.$

Substitute values of m and A,

$$4=\frac{20}{B}. \qquad\therefore\ B=5.$$

5. If $A \propto \frac{B}{C}$, and when $A = 6$, $B = 4$, and $C = 3$, find the value of A when $B = 5$ and $C = 7$.

Here
$$A = \frac{mB}{C},$$
$$mB = AC,$$
$$4m = 18.$$
$$\therefore m = 4\tfrac{1}{2}.$$

Substitute value of B, C, and m,
$$A = \frac{4\frac{1}{2} \times 5}{7}.$$
$$\therefore A = 3\tfrac{3}{14}.$$

6. If the square of X vary as the cube of Y, and $X = 3$ when $Y = 4$, find the equation between X and Y.

Here
$$X^2 = mY^3,$$
$$m = \frac{X^2}{Y^3}.$$
$$\therefore m = \tfrac{9}{64}.$$

Substitute value of m,
$$X^2 = \tfrac{9}{64} Y^3,$$
$$64X^2 = 9Y^3.$$

7. If the square of X vary inversely as the cube of Y, and $X = 2$ when $Y = 3$, find the equation between X and Y.

Here
$$X^2 = \frac{m}{Y^3},$$
$$m = X^2 Y^3.$$
$$\therefore m = 108.$$

Substitute value of m,
$$X^2 = \frac{108}{Y^3}.$$

8. If Z vary as X directly and Y inversely, and if when $Z = 2$, $X = 3$, and $Y = 4$, find the value of Z when $X = 15$ and $Y = 8$.

$$Z \propto \frac{X}{Y}.$$

Here
$$Z = \frac{mX}{Y},$$
$$m = \frac{ZY}{X}.$$
$$\therefore m = \tfrac{8}{3} = 2\tfrac{2}{3}.$$

Substitute values of m, X, and Y,
$$Z = \frac{2\frac{2}{3} \times 15}{8}.$$
$$\therefore Z = 5.$$

9. If $A \propto B + c$ where c is constant, and if $A = 2$ when $B = 1$, and if $A = 5$ when $B = 2$, find A when $B = 3$.

As $A = mB + c.$

Substitute first values of A and B,

$$2 = m + c \qquad (1)$$

Substitute second values of A and B,

$$5 = 2m + c \qquad (2)$$

Subtract (1) from (2), $m = 3.$

Whence, from (1), $c = -1.$

But $A = mB + c.$

Substitute for m, B, and c their values 3, 3, and -1,

$$A = 8.$$

10. The velocity acquired by a stone falling from rest varies as the time of falling; and the distance fallen varies as the square of the time. If it be found that in 3 seconds a stone has fallen 145 feet, and acquired a velocity of $96\frac{2}{3}$ feet per second, find the velocity and distance at the end of 5 seconds.

Let $v =$ velocity,

$T =$ time,

$d =$ distance.

Then $v \propto T,$

and $d \propto T^2.$

Let $v = mT.$

Substitute $96\frac{2}{3}$ for v and 3 for T,

$$96\tfrac{2}{3} = 3m.$$

$$\therefore m = \tfrac{290}{9}.$$

When $T = 5$, $v = \tfrac{290}{9} \times 5 = 161\tfrac{1}{9}.$

Let $d = mT^2.$

$$\therefore 145 = 3^2 m.$$

$$m = \tfrac{145}{9}.$$

When $T = 5$, $d = \tfrac{145}{9} \times 5^2 = 402\tfrac{7}{9}.$

11. If a heavier weight draw up a lighter one by means of a string passing over a fixed wheel, the space described in a given time will vary directly as the difference between the weights, and inversely as their sum. If 9 ounces draw 7 ounces through 8 feet in 2 seconds, how high will 12 ounces draw 9 ounces in the same time?

Let x = heavy weight,
y = light weight,
z = space.

$$z \propto \frac{x-y}{x+y}.$$

$$z = \frac{(x-y)m}{x+y},$$

$$m = \frac{z(x+y)}{x-y}.$$

Substitute values, $$m = \frac{(7+9)8}{9-7}.$$

$$\therefore m = 64.$$

$$64 = \frac{(12+9)z}{12-9},$$

$$64 = \frac{21z}{3},$$

$$7z = 64.$$

$$\therefore z = 9\tfrac{1}{7}.$$

12. The space will vary also as the square of the time. Find the space in Example 11, if the time in the latter case be 3 seconds.

We have from last example, $9\frac{1}{7}$ feet for 2 seconds.

Since space varies as square of time, we have

$$9\tfrac{1}{7} : x :: 2^2 : 3^2.$$

$$\therefore 4x = 9 \times \tfrac{64}{7},$$

$$x = 9 \times \tfrac{16}{7}$$

$$= \tfrac{144}{7}$$

$$= 20\tfrac{4}{7}.$$

$20\frac{4}{7}$ feet. *Ans.*

13. Equal volumes of iron and copper are found to weigh 77 and 89 ounces respectively. Find the weight of $10\frac{1}{2}$ feet of round copper rod when 9 inches of iron rod of the same diameter weigh $31\frac{9}{10}$ ounces.

Let x = required weight.

9 inches = $\frac{3}{4}$ of a foot.

If $\frac{3}{4}$ of a foot weigh 31.9 ounces, $\frac{1}{4}$ of a foot would weigh $10.03\frac{1}{3}$ ounces, and $10\frac{1}{2}$ feet would weigh 446.60 ounces.

And, as equal volumes of iron and copper weigh 77 and 89 ounces respectively,

$$77 : 89 :: 446\tfrac{3}{5} : x.$$

$$\therefore x = 516\tfrac{1}{3} \text{ ounces.}$$

14. The square of the time of a planet's revolution varies as the cube of its distance from the sun. The distances of the Earth and Mercury from the sun being 91 and 35 millions of miles, find in days the time of Mercury's revolution.

Let x = time of Mercury's revolution.

$$91^3 : 35^3 :: 1^2 : x^2,$$

$$13^3 : 5^3 :: 1 : x^2.$$

Whence, $x^2 = .056895.$

$$\therefore x = .238, \text{ time in years,}$$

$$= 87.1, \text{ time in days.}$$

15. A spherical iron shell 1 foot in diameter weighs $\frac{91}{216}$ of what it would weigh if solid. Find the thickness of the metal, it being known that the volume of a sphere varies as the cube of its diameter.

Let D = diameter of shell,

d = diameter of sphere required to fill the shell,

and 1 represent the weight of iron sphere having diameter = D.

Then $1 - \frac{91}{216}$ will represent the weight of iron sphere having diameter = d.

Now the weights vary as the cubes of their diameters,

$$\therefore D^3 : d^3 :: 1 : 1 - \tfrac{91}{216}.$$

That is, $D^3 : d^3 :: 1 : \frac{125}{216}$;

or, by extracting the cube root of each term,

$$D : d :: 1 : \tfrac{5}{6},$$

$$\text{or } d = \tfrac{5}{6}D.$$

Since the thickness of the shell $= \frac{1}{2}(D - d)$,

the thickness of the shell $= \frac{1}{2}(1 - \frac{5}{6}) = \frac{1}{12}$.

Hence, the thickness of the shell is $\frac{1}{12}$ of a foot, = 1 inch.

16. The volume of a sphere varies as the cube of its diameter. Compare the volume of a sphere 6 inches in diameter with the sum of the volumes of three spheres whose diameters are 3, 4, 5 inches respectively.

Let x = volume of first sphere,
and y = sum of volume of other three.
Then $x : y :: (6)^3 : (3)^3 + (4)^3 + (5)^3$,
$x : y :: 216 : 216$.
Therefore, the ratio is a ratio of equality.

17. Two circular gold plates, each an inch thick, the diameters of which are 6 inches and 8 inches respectively, are melted and formed into a singular circular plate 1 inch thick. Find its diameter, having given that the area of a circle varies as the square of its diameter.

Let a_1 = area of gold plate 6 inches in diameter,
a_2 = area of gold plate 8 inches in diameter,
a_3 = area of gold plate formed from the other two plates,
and x = diameter required.
Then $a_1 + a_2 : a_3 :: 6^2 + 8^2 : x^2$.
Since the first ratio is a ratio of equality, the second is also.
Therefore, $x^2 = 6^2 + 8^2 = 100$.
$\therefore x = 10$.

18. The volume of a pyramid varies jointly as the area of its base and its altitude. A pyramid, the base of which is 9 feet square, and the height of which is 10 feet, is found to contain 10 cubic yards. What must be the height of a pyramid upon a base 3 feet square, in order that it may contain 2 cubic yards?

Let v = volume,
b = area of base,
and a = altitude.
Then $v \propto ba$,
$v = mba$ (1)
$m = \frac{v}{ba}$.
When $v = 10$ cubic yards $= 270$ cubic feet,
$b = 9 \times 9 = 81$ square feet,
and $a = 10$ feet.
Then $m = \frac{v}{ba} = \frac{270}{810} = \frac{1}{3}$.
From (1), $a = \frac{v}{mb}$.
When $m = \frac{1}{3}$,
$v = 2$ cubic yards $= 54$ cubic feet,
$b = 3 \times 3 = 9$ square feet.
Then $a = \frac{v}{mb} = \frac{54}{3} = 18$.

PAGE 298.

1.

The series is $a,\ a+d,\ a+2d,$ .....

$\therefore$ *nth* term is $a+(n-1)d.$

Let l denote last or *nth* term

Then $l=a+(n-1)d.$

2.

$$l=a+(n-1)d.$$
$$l=a+nd-d,$$
$$nd=l-a+d,$$
$$n=\frac{l-a+d}{d},$$
$$s=\frac{n}{2}(a+l),$$
$$2s=n(a+l),$$
$$n=\frac{2s}{a+l},$$
$$\frac{2s}{a+l}=\frac{l-a+d}{d}.$$

Simplify, $2sd=l^2-a^2+ad+ld,$

$$l^2+dl=2sd+a^2-ad.$$

Complete the square,

$$4l^2+(\ )+d^2=8sd+4a^2-4ad+d^2.$$

Extract the root, $2l+d=\pm\sqrt{8sd+4a^2-4ad+d^2},$

$$l=-\tfrac{1}{2}d\pm\sqrt{2ds+a^2-ad+\frac{d^2}{4}}.$$
$$l=-\tfrac{1}{2}d\pm\sqrt{2ds+(a-\tfrac{1}{2}d)^2}.$$

3. $s=\frac{n}{2}(a+l),$

$$2s=na+nl.$$

Transpose,

$$2s-na=nl.$$
$$\therefore\ l=\frac{2s-na}{n}.$$
$$\therefore\ l=\frac{2s}{n}-a.$$

4. $l=a+(n-1)d \quad (1)$

$$s=\frac{n}{2}(a+l) \quad (2)$$
$$2s=na+nl.$$
$$\therefore\ a=\frac{2s}{n}-l.$$

Substitute value of a in (1),

$$l=\frac{s}{n}+\frac{(n-1)d}{2}.$$

5.

$$l = a + (n-1)d \qquad (1)$$

$$s = \frac{n}{2}(a+l) \qquad (2)$$

Substitute in (2) $a + (n-1)d$ for l,

$$s = \frac{n}{2}[2a + (n-1)d].$$

6.

$$l = a + (n-1)d \qquad (1)$$

$$s = \frac{n}{2}(a+l) \qquad (2)$$

From (1), $l = a + nd - d.$

From (2), $2s = na + nl.$

$$\therefore n = \frac{l-a+d}{d}$$

$$\text{and } n = \frac{2s}{a+l}.$$

$$\therefore \frac{l-a+d}{d} = \frac{2s}{a+l}.$$

$$l^2 - a^2 + ad + dl = 2sd.$$

$$\therefore s = \frac{l^2 - a^2 + ad + dl}{2d},$$

$$\text{or } s = \frac{l^2 - a^2}{2d} + \frac{l+a}{2}.$$

7.

$$s = a + (a+d) + (a+2d) + \cdots + (l-d) + l$$

$$\text{or } s = l + (l-d) + (l-2d) + \cdots + (a+d) + a$$

$$\therefore 2s = (a+l) + (a+l) + (a+l) + \cdots + (a+l) + (a+l)$$

$$2s = n(a+l).$$

$$\therefore s = \frac{n(a+l)}{2}.$$

8.

$$l = a + (n-1)d \quad (1)$$
$$s = \tfrac{1}{2}n(a+l) \quad (2)$$

From (1), $a = l - (n-1)d.$

From (2), $a = \dfrac{2s - ln}{n}.$

Then $\dfrac{2s-ln}{n} = l - (n-1)d,$

$$2s = 2ln - (n-1)dn.$$
$$\therefore s = \tfrac{1}{2}n[2l - (n-1)d].$$

9.

$$l = a + (n-1)d.$$

Transposing, $a = l - (n-1)d.$

10.

$$l = a + (n-1)d,$$
$$s = \tfrac{1}{2}n(a+l).$$

From (2), $2s = na + nl.$

$$\therefore l = \frac{2s - na}{n}.$$

$$\therefore a + (n-1)d = \frac{2s - na}{n}.$$

$$na + dn^2 - dn = 2s - na,$$
$$2na = 2s - dn^2 + dn.$$
$$\therefore a = \frac{s}{n} - \frac{(n-1)d}{2}.$$

11.

$$l = a + (n-1)d,$$
$$dn = l - a + d,$$
$$n = \frac{l - a + d}{d},$$
$$s = \tfrac{1}{2}n(a+l),$$
$$2s = na + nl,$$
$$n = \frac{2s}{a+l}.$$
$$\therefore \frac{l-a+d}{d} = \frac{2s}{a+l}.$$
$$\therefore l^2 - a^2 + ad + ld = 2ds.$$
$$a^2 - ad = l^2 + ld - 2ds,$$
$$a^2 - (\ ) + (\tfrac{1}{2}d)^2 = l^2 + ld - 2ds + (\tfrac{1}{2}d)^2,$$
$$a - \tfrac{1}{2}d = \pm\sqrt{l^2 + ld - 2ds + (\tfrac{1}{2}d)^2}.$$
$$\therefore a = \tfrac{1}{2}d \pm \sqrt{(l + \tfrac{1}{2}d)^2 - 2ds}.$$

12.

$$s = \tfrac{1}{2}n(a+l).$$

Multiply by $\frac{2}{n}$

$$\frac{2s}{n} = a + l.$$

$$\therefore a = \frac{2s}{n} - l.$$

13.

$$a = l - (n-1)d,$$

$$d(n-1) = l - a.$$

$$\therefore d = \frac{l-a}{n-1}.$$

14.

$$l = a + (n-1)d$$

$$s = \tfrac{1}{2}n(a+l),$$

$$2s = an + nl.$$

$$\therefore l = \frac{2s - an}{n}.$$

$$\therefore a + nd - d = \frac{2s - an}{n}.$$

$$an + n^2d - nd = 2s - an,$$

$$n^2d - nd = 2s - 2an,$$

$$d(n^2 - n) = 2(s - an).$$

$$\therefore d = \frac{2(s-an)}{n(n-1)}$$

15.

$$l = a + (n-1)d.$$

$$\therefore n = \frac{l-a}{d} + 1.$$

$$s = \tfrac{1}{2}n(a+l).$$

$$\therefore n = \frac{2s}{a+l}.$$

$$\therefore \frac{l-a}{d} + 1 = \frac{2s}{a+l}.$$

$$\therefore l^2 - a^2 + ad + dl = 2ds.$$

$$\therefore 2ds - ad - dl = l^2 - a^2.$$

$$\therefore d(2s - l - a) = l^2 - a^2.$$

$$\therefore d = \frac{l^2 - a^2}{2s - l - a}$$

16.

$$l = a + (n-1)d.$$

$$\therefore a = l - (n-1)d.$$

$$s = \tfrac{1}{2}n(a+l).$$

$$\therefore a = \frac{2s - ln}{n}.$$

$$\therefore l - (n-1)d = \frac{2s - ln}{n}.$$

$$ln - dn^2 + dn = 2s - ln,$$

$$-dn^2 + dn = 2s - 2ln,$$

$$d(n-1)n = 2(ln - s).$$

$$\therefore d = \frac{2(ln-s)}{n(n-1)}$$

17.

$$l = a + (n-1)d,$$

$$l = a + dn - d,$$

$$dn = l - a + d.$$

$$\therefore n = \frac{l-a}{d} + 1.$$

18.

$$l = a + (n-1)\,d \qquad (1)$$

$$s = \tfrac{1}{2}n\,(a+l) \qquad (2)$$

From (2), $$l = \frac{2s}{n} - a.$$

$$\therefore a + (n-1)d = \frac{2s}{n} - a.$$

$$an + d^2n - dn = 2s - an,$$

$$dn^2 + n(2a - d) = 2s.$$

Complete the square,

$$4d^2n^2 + (\ ) + (2a-d)^2 = (2a-d)^2 + 8ds.$$

Extract the root,

$$2dn + (2a-d) = \pm\sqrt{(2a-d)^2 + 8ds},$$

$$2dn = d - 2a \pm \sqrt{(2a-d)^2 + 8ds}.$$

$$\therefore n = \frac{d - 2a \pm \sqrt{(2a-d)^2 + 8ds}}{2d}$$

19.

$$s = \tfrac{1}{2}n\,(a+l),$$

$$2s = an + ln.$$

$$\therefore n = \frac{2s}{l+a}.$$

20.

$$l = a + (n-1)\,d \qquad (1)$$

$$s = \tfrac{1}{2}n\,(a+l) \qquad (2)$$

From (1), $$a = l - (n-1)\,d.$$

From (2) $$a = \frac{2s - ln}{n}.$$

$$\therefore l - (n-1)\,d = \frac{2s - ln}{n}.$$

$$\therefore ln - dn^2 + dn = 2s - ln,$$

$$dn^2 - (2l+d)n = -2s,$$

$$4d^2n^2 - (\ ) + (2l+d)^2 = (2l+d)^2 - 8ds,$$

$$2dn - (2l+d) = \sqrt{(2l+d)^2 - 8ds}.$$

$$\therefore n = \frac{2l + d \pm \sqrt{(2l+d)^2 - 8ds}}{2d}.$$

Exercise 109.

1. Find the thirteenth term of 5, 9, 13.....
ninth term of $-3, -1, 1$.....
tenth term of $-2, -5, -8$.....
eighth term of $a, a+3b, a+6b$.....
fifteenth term of $1, \frac{6}{7}, \frac{5}{7}$.....
thirteenth term of $-48, -44, -40$.....

(1) $l = a + (n-1)d$,
$l = 5 + (13-1)4$.
$\therefore l = 53$.

(2) $l = a + (n-1)d$,
$l = -3 + (9-1)2$.
$\therefore l = 13$.

(3) $l = a + (n-1)d$,
$l = -2 + (10-1)(-3)$.
$\therefore l = -29$.

(4) $l = a + (n-1)d$,
$l = a + (8-1)(3b)$.
$\therefore l = a + 21b$.

(5) $l = a + (n-1)d$,
$l = 1 + (15-1)(-\frac{1}{7})$.
$\therefore l = -1$.

(6) $l = a + (n-1)d$,
$l = -48 + (13-1)(4)$.
$\therefore l = 0$.

2. The first term of an arithmetical series is 3, the thirteenth term is 55. Find the common difference.

$$d = \frac{l-a}{n-1},$$
$$d = \frac{55-3}{13-1}.$$
$$\therefore d = \tfrac{52}{12} = 4\tfrac{1}{3}.$$

3. Find the arithmetical mean between:
(a) 3 and 12; (b) -5 and 17; (c) a^2+ab-b^2 and a^2-ab+b^2.

(a) $A - a = b - A$.
$\therefore A = \frac{a+b}{2}$.
$A - 3 = 12 - A$,
$2A = 15$.
$\therefore A = 7\frac{1}{2}$.

(b) $A + 5 = 17 - A$,
$2A = 12$.
$\therefore A = 6$.

(c) $A - (a^2+ab-b^2) = (a^2-ab+b^2) - A$,
$2A = 2a^2$.
$\therefore A = a^2$.

4. Insert three arithmetical means between 1 and 19, and four means between −4 and 17.

$$(1)\ \frac{l-a}{m+1}=d,$$

$$\frac{19-1}{3+1}=4\tfrac{1}{2}.$$

$\therefore$ series is $1,\ 5\tfrac{1}{2},\ 10,\ 14\tfrac{1}{2},\ 19.$

$$(2)\ \frac{17+4}{4+1}=4\tfrac{1}{5}.$$

$\therefore$ series is $-4,\ \tfrac{1}{5},\ 4\tfrac{2}{5},\ 8\tfrac{3}{5},\ 12\tfrac{4}{5},\ 17.$

5. The first term of a series is 2, and the common difference $\frac{1}{3}$. What term will be 10?

$$l=a+(n-1)d.$$

$$\therefore\ 10=2+\tfrac{1}{3}(n-1).$$

$$8=\frac{n-1}{3}.$$

$$\therefore\ n=25.$$

6. The seventh term of a series, whose common difference is 3, is 11. Find the first term.

$$a=l-(n-1)d,$$

$$a=11-(7-1)3.$$

$$\therefore\ a=-7.$$

7. Find the sum of

$5+8+11+\cdots\cdots$ to ten terms.

$-4-1+2+\cdots\cdots$ to seven terms.

$a+4a+7a+\cdots\cdots$ to n terms.

$\frac{2}{3}+\frac{7}{15}+\frac{4}{15}+\cdots\cdots$ to twenty-one terms.

$1+2\frac{2}{3}+4\frac{1}{3}+\cdots\cdots$ to twenty terms.

(1) $s=\frac{1}{2}n[2a+(n-1)d],$
$s=5(10+27),$
$s=5\times 37,$
$s=185.$

(2) $s=\frac{1}{2}n[2a+(n-1)d],$
$s=\frac{7}{2}(-8+18),$
$s=\frac{7}{2}\times 10,$
$s=35.$

(3) $s=\frac{1}{2}n[2a+(n-1)d],$
$s=\frac{1}{2}n[2a+(n-1)3a],$
$s=\frac{1}{2}n(3an-a),$
$s=\frac{1}{2}an(3n-1).$

(4) $s=\frac{1}{2}n[2a+(n-1)d],$
$s=\frac{21}{2}(\frac{1}{3}-4),$
$s=\frac{21}{2}\times(-\frac{8}{3}),$
$s=-28.$

(5) $s = \frac{1}{2}n[2a + (n-1)d]$,

$s = 10(2 + 31\frac{2}{3})$,

$s = 10 \times 33\frac{2}{3}$,

$s = 336\frac{2}{3}$.

8. The sum of six numbers of an arithmetical series is 27, and the first term is 1. Determine the series.

$$l = \frac{2s}{n} - a.$$

Then $l = \frac{54}{6} - 1.$

$\therefore l = 8.$

$l = a + (n-1)d.$

Substitute, $8 = 1 + (5)d,$

$d = 1\frac{2}{5}.$

Hence, the series is 1, $2\frac{2}{5}$, $3\frac{4}{5}$, $5\frac{1}{5}$, $6\frac{3}{5}$, 8.

9. How many terms of the series $-5-2+1+\cdots\cdots$ must be taken so that their sum may be 63?

$l = a + (n-1)d.$

Substitute, $l = -5 + (n-1)3.$

$\therefore l = 3n - 8$

Substitute values in $s = \frac{1}{2}n(a + l).$

$63 = \frac{1}{2}n(-5 + 3n - 8),$

$126 = 3n^2 - 13n,$

$3n^2 - 13n = 126.$

Multiply by 12, $36n^2 - 156n = 1512.$

Complete the square,

$36n^2 - (\ ) + 169 = 1681.$

Extract the root, $6n - 13 = \pm 41,$

$6n = 54.$

$\therefore n = 9.$

10. The first term is 12, and the sum of ten terms is 10. Find the last term.

$$s = \tfrac{1}{2}n(a + l),$$
$$l = a + (n-1)d.$$
$$\therefore s = \tfrac{1}{2}n[2a + (n-1)d].$$
$$10 = 5(24 + 9d),$$
$$10 = 120 + 45d,$$
$$45d = -110.$$
$$d = -2\tfrac{4}{5}.$$

Since
$$l = a + (n-1)d,$$
$$l = 12 + (9)(-2\tfrac{4}{5}),$$
$$l = 12 - 22,$$
$$l = -10.$$

11. The arithmetical mean between two numbers is 10, and the mean between the double of the first and the triple of the second is 27. Find the numbers.

Let
x = one number,
y = the other number.

$x,\ 10,\ y$ = the series,
$2x,\ 27,\ 3y$ = the series.

Hence,
$$10 - x = y - 10 \quad (1)$$
$$27 - 2x = 3y - 27 \quad (2)$$

From (1),
$$x + y = 20 \quad (3)$$

From (2),
$$2x + 3y = 54 \quad (4)$$

Multiply (3) by 2,
$$2x + 2y = 40$$

(4) is
$$2x + 3y = 54$$
$$\therefore y = 14$$

Multiply (3) by 3,
$$3x + 3y = 60$$

(4) is
$$2x + 3y = 54$$
$$\therefore x = 6$$

12. Find the middle term of eleven terms whose sum is 66.

Let
$$\frac{a + l}{2} = \text{middle term}.$$
$$s = \tfrac{1}{2}n(a + l).$$

Substitute values of s and n,
$$66 = \tfrac{11}{2}(a + l).$$
$$\therefore a + l = 12.$$

Hence, the middle term is 6.

13. The first term of an arithmetical series is 2, the common difference is 7, and the last term 79. Find the number of terms.

Let $l = a + (n-1)d.$

Substitute values, $79 = 2 + (n-1)7,$

$79 = 2 + 7n - 7,$

$7n = 84.$

$\therefore n = 12.$

14. The sum of fifteen terms of an arithmetical series is 600, and the common difference is 5. Find the first term.

$$l = a + (n-1)d,$$

$$s = \tfrac{1}{2}n(a+l),$$

$$2s = na + nl,$$

$$nl = 2s - na,$$

$$l = \frac{2s - na}{n}.$$

$$\therefore a + (n-1)d = \frac{2s - na}{n}.$$

$$na + dn^2 - dn = 2s - na,$$

$$2na = 2s - dn^2 + dn.$$

$$\therefore a = \frac{s}{n} - \frac{(n-1)d}{2}.$$

$$\therefore a = \frac{600}{15} - \frac{(15-1)d}{2}$$

$$= 40 - 35 = 5.$$

15. Insert ten arithmetical means between -7 and 114.

$$l = a + (n-1)d,$$

$$l - a = (n-1)d,$$

$$\frac{l-a}{n-1} = d.$$

$$\therefore 114 = -7 + (12-1)d,$$

$$121 = 11d.$$

$$\therefore d = 11.$$

Hence, the means are 4, 15, 26, ...

16. The sum of three numbers in arithmetical progression is 15, and the sum of their squares is 83. Find the numbers.

Let $x-y,\ x,\ x+y$ = the numbers.

Then $(x-y)+x+(x+y)=15,$

$3x=15.$

$\therefore x=5.$

$(x-y)^2+x^2+(x+y)^2=83,$

$3x^2+2y^2=83.$

Substitute 5 for x, $2y^2=8,$

$y^2=4.$

$\therefore y=\pm 2.$

$x-y=3 \text{ or } 7,$

$x=5,$

$x+y=7 \text{ or } 3.$

17. Arithmetical means are inserted between 5 and 23, so that the sum of the first two is to the sum of the last two as 2 is to 5. How many means are inserted?

Let x = number of means.

Then $x+2$ = number of terms.

$l=a+(n-1)d,$

$23=5+(x+2-1)d,$

$23-5=dx+d.$

$dx+d=18.$

If d equal common difference,

$5+d$ and $5+2d$ = first and second means.

$23-d$ and $23-2d$ = last two means.

Then $5+d+5+2d : 23-d+23-2d :: 2 : 5.$

$50+15d=92-6d,$

$21d=42.$

$\therefore d=2.$

Substitute value of d in $dx+d=18,$

$2x=18-2.$

$\therefore x=8.$

18. Find three numbers of an arithmetical series whose sum shall be 21, and the sum of the first and second shall be $\frac{3}{4}$ of the sum of the second and third.

Let $x-y=$ first number,
$x=$ second number,
and $x+y=$ third number.
Then $x-y+x+x+y=21,$
$3x=21.$
$\therefore x=7.$
$x-y+x=\frac{3}{4}(x+x+y),$
$8x-4y=6x+3y,$
$7y=14.$
$\therefore y=2.$

Hence, the numbers are 5, 7, and 9.

19. Find three numbers whose common difference is 1, such that the product of the second and third exceeds that of the first and second by $\frac{1}{4}$.

Let $x-1=$ first number,
$x=$ second number,
and $x+1=$ third number.
Then $x^2-x+\frac{1}{4}=x^2+x.$
$\therefore x=\frac{1}{4}.$

Hence, the numbers are $-\frac{3}{4}$, $\frac{1}{4}$, $1\frac{1}{4}$.

20. How many terms of the series 1, 4, 7, ... must be taken, in order that the sum of the first half may bear to the sum of the second half the ratio 10 : 31?

Let $2x=$ whole number of terms.
Then $x=$ half the number of terms.
From the formulas, $l=a+(n-1)d,$
and $s=\frac{1}{2}n(a+l).$

For the first half of the terms,

$l=3x-2,$
$s=\frac{1}{2}x(3x-1).$

For the second half of the terms,

$a=3x-2+3=3x+1.$
$\therefore l=3x+1+(x-1)3=6x-2,$
and $s=\frac{1}{2}x(9x-1).$
But $\frac{1}{2}x(3x-1):\frac{1}{2}x(9x-1)::10:31,$
or $3x-1:9x-1::10:31.$
$\therefore 93x-31=90x-10,$
$3x=21,$
$x=7.$

Hence, the whole number of terms is 14.

21. A travels uniformly 20 miles a day; B starts three days later, and travels 8 miles the first day, 12 the second, and so on, in arithmetical progression. In how many days will B overtake A?

Let x = number of days B travels.

Since A travels 20 miles a day,

$20x + 60$ = number of miles A travels.

$$l = a + (n-1)d,$$
$$l = 8 + (x-1)4,$$
$$l = 4x + 4.$$

Hence, B travels $(4x + 4)$ miles the last day.

$$s = \tfrac{1}{2}n(a + l)$$
$$= \tfrac{1}{2}x(8 + 4x + 4).$$
$$\therefore\ 20x + 60 = \tfrac{1}{2}x(8 + 4x + 4),$$
$$40x + 120 = 4x^2 + 12x.$$

Multiply by 4, $16x^2 - 112x = 480.$

Complete the square, $16x^2 - ( ) + 196 = 676.$

Extract the root, $4x - 14 = \pm 26,$

$$4x = 40.$$
$$\therefore\ x = 10.$$

22. A number consists of three digits which are in arithmetical progression; and this number divided by the sum of its digits is equal to 26; but if 198 be added to it, the digits in the units' and hundreds' places will be interchanged. Required the number.

Let $x - y$ = digit in hundreds' place,

x = digit in tens' place,

and $x + y$ = digit in units' place.

Then $100(x-y) + 10x + (x+y) + 198 = 100(x+y) + 10x + (x-y)$ (1)

$$\frac{100(x-y) + 10x + (x+y)}{3x} = 26 \quad (2)$$

From (1), $-198y = -198.$

$$\therefore\ y = 1.$$

Substitute value of y in (2),

$$\frac{(100x - 100) + 10x + (x+1)}{3x} = 26,$$

$$33x = 99.$$
$$\therefore\ x = 3.$$
$$x - y = 2,$$
$$x = 3,$$
$$x + y = 4.$$

Hence, the number is 234.

23. The sum of the squares of the extremes of four numbers in arithmetical progression is 200, and the sum of the squares of the means is 136. What are the numbers?

Let $x-3y,\ x-y,\ x+y,\ x+3y$ = the numbers.

Then
$$2x^2+18y^2=200 \quad (1)$$
$$2x^2+2y^2=136 \quad (2)$$
$$16y^2=64$$
$$y^2=4.$$
$$\therefore y=\pm 2.$$

Substitute value of y in (2), $x^2=64$.

$$\therefore x=\pm 8.$$

Hence, the numbers are 2, 6, 10, 14.

24. Show that, if any even number of terms of the series 1, 3, 5, ... be taken, the sum of the first half is to the sum of the second half in the ratio 1 : 3.

Let $2n$ = whole number of terms.

Then, for n terms, $l=a+(n-1)d=2n-1$,

$$s=\tfrac{1}{2}n(a+l)=n^2.$$

For the next n terms, $a=2n+1$.

$$\therefore l=(2n+1)+(n-1)^2=4n-1,$$
$$s=\tfrac{1}{2}n(2n+1+4n-1)=3n^2.$$

But $n^2:3n^2::1:3.$

25. A and B set out at the same time to meet each other from two places 343 miles apart. Their daily journeys are in arithmetical progression, A's increase being 2 miles each day, and B's decrease being 5 miles each day. On the day at the end of which they met, each travelled exactly 20 miles. Find the duration of the journey.

Let n = number of days they travelled.

$$s=\tfrac{1}{2}n(a+l)=\tfrac{1}{2}n[2a+(n-1)d]$$
$$=\tfrac{1}{2}n[40+(n-1)\ (-2)]$$
$$=\tfrac{1}{2}n(40-2n+2)$$
$$=21n-n^2 \text{ (distance A travelled).}$$

$$s = \tfrac{1}{2}n(a+l) = \tfrac{1}{2}n[2a+(n-1)d]$$
$$= \tfrac{1}{2}n[40+(n-1)5]$$
$$= \tfrac{1}{2}n(40+5n-5)$$
$$= \frac{35n+5n^2}{2} \text{ (distance B travelled).}$$
$$\therefore 21n - n^2 + \frac{35n+5n^2}{2} = 343,$$
$$42n - 2n^2 + 35n + 5n^2 = 686,$$
$$3n^2 + 77n = 686,$$
$$36n^2 + (\ ) + (77)^2 = 14161,$$
$$6n + 77 = \pm 119,$$
$$6n = 42 \text{ or } -196.$$
$$\therefore n = 7.$$

26. Suppose that a body falls through a space of $16\frac{1}{2}$ feet in the first second of its fall, and in each succeeding second $32\frac{1}{8}$ more than in the next preceding one. How far will a body fall in 20 seconds?

$$s = \tfrac{1}{2}n(a+l) \quad (1)$$
$$l = a + (n-1)d \quad (2)$$

Substitute value of l in (1), $s = \tfrac{1}{2}n[2a+(n-1)d]$ (3)

Substitute values in (3), $s = \frac{20}{2}[32\frac{1}{8} + (20-1)32\frac{1}{8}]$.

$$s = 10(643\tfrac{1}{8}),$$
$$s = 6433\tfrac{1}{8}.$$

27. The sum of five numbers in arithmetical progression is 45, and the product of the first and fifth is $\frac{5}{8}$ of the product of the second and fourth. Find the numbers.

Let $x-2y,\ x-y,\ x,\ x+y,\ x+2y$ = the numbers.

Then, as 45 = the sum,

$$5x = 45.$$
$$\therefore x = 9.$$
$$(x-2y)(x+2y) = \tfrac{5}{8}(x-y)(x+y),$$
$$x^2 - 4y^2 = \tfrac{5}{8}(x^2 - y^2),$$
$$8x^2 - 32y^2 = 5x^2 - 5y^2,$$
$$3x^2 = 27y^2,$$
$$x^2 = 9y^2.$$
$$\therefore x = \pm 3y.$$

But $x = 9.$

$$\therefore y = \pm 3.$$

Hence, the numbers are 3, 6, 9, 12, 15.

28. If a full car descending an incline draw up an empty one at the rate of $1\frac{1}{2}$ feet the first second, $4\frac{1}{2}$ feet the next second, $7\frac{1}{2}$ feet the third, and so on, how long will it take to descend an incline 150 feet in length? What part of the distance will the car have descended in the first half of the time?

$$s = \tfrac{1}{2}n(a+l),$$
$$l = a + (n-1)d.$$
$$s = \tfrac{1}{2}n[2a + (n-1)d],$$
$$2s = 2an + n^2d - nd.$$

Here $s = 150,\ a = 1\frac{1}{2},\ d = 3.$

$$\therefore 300 = 3n + 3n^2 - 3n,$$
$$3n^2 = 300.$$
$$\therefore n = 10 \text{ (seconds)}.$$
$$s = \tfrac{1}{2}n[2a + (n-1)d],$$
$$s = \tfrac{5}{2}(3 + 12),$$
$$s = 37\tfrac{1}{2} \text{ (feet)}.$$

But $37\frac{1}{2} = \frac{1}{4}$ of 150.

Hence, the car descends one-fourth the distance in the first half of the time.

PAGE 305.

1. 1st term $= a$,
2d term $= ar$,
3d term $= ar^2$,
. . . . . .
nth term $= ar^{n-1}$.
$\therefore l = ar^{n-1}$.

2. $s = \dfrac{rl - a}{r - 1}$,

$$rs - s = rl - a,$$
$$rl = a + (r-1)s.$$
$$\therefore l = \frac{a + (r-1)s}{r}$$

3.
$$l = ar^{n-1} \quad (1)$$
$$\therefore rl = ar^n \quad (2)$$

From (1), $r^{n-1} = \dfrac{l}{a}$.

$$\therefore r = \sqrt[n-1]{\frac{l}{a}}$$

Also, $s = \dfrac{a(r^n - 1)}{r - 1}$,

$$sr - s = ar^n - a,$$
$$sr - ar^n = s - a.$$

Substitute rl for ar^n,

$$sr - rl = s - a,$$
$$r(s - l) = s - a.$$
$$\therefore r = \frac{s-a}{r-l}$$
$$\therefore \sqrt[n-1]{\frac{l}{a}} = \frac{s-a}{s-l}$$
$$\frac{l}{a} = \left(\frac{s-a}{s-l}\right)^{n-1},$$
$$l(s-l)^{n-1} - a(s-a)^{n-1} = 0.$$

4.

$$l = ar^{n-1}.$$

$$\therefore a = \frac{l}{r^{n-1}},$$

$$s = \frac{a(r^n - 1)}{r - 1},$$

$$s(r-1) = a(r^n - 1),$$

$$a = \frac{s(r-1)}{r^n - 1}.$$

$$\therefore \frac{l}{r^{n-1}} = \frac{s(r-1)}{r^n - 1},$$

$$l(r^n - 1) = sr^{n-1}(r-1),$$

$$l = \frac{sr^{n-1}(r-1)}{r^n - 1}.$$

5.

$$s = a + ar + ar^2 + ar^3 + \cdots + ar^{n-1}$$

Multiply by r, $\quad rs = \quad ar + ar^2 + ar^3 + \cdots\cdots + ar^{n-1} + ar^n$

Subtract, $\quad rs - s = ar^n - a$

$$s(r-1) = a(r^n - 1).$$

$$s = \frac{a(r^n - 1)}{r - 1}.$$

6.

$$s = a + ar + ar^2 + ar^3 + \cdots\cdots + ar^{n-1}$$

Multiply by r, $\quad rs = \quad ar + ar^2 + ar^3 + \cdots\cdots + ar^{n-1} + ar^n$

Subtract, $\quad rs - s = ar^n - a$

$$(r-1)s = a(r^n - 1),$$

$$s = \frac{ar^n - a}{r - 1}.$$

Since $\quad l = ar^{n-1},$

$$rl = ar^n.$$

Substitute rl for ar^n, $\quad s = \frac{rl - a}{r - 1}.$

7. $l = ar^{n-1}$,

$$r^{n-1} = \frac{l}{a},$$

$$r = \left(\frac{l}{a}\right)^{\frac{1}{n-1}},$$

$$s = \frac{a(r^n - 1)}{r - 1},$$

$$rs - s = a(r^n - 1).$$

Substitute value of r,

$$s\left(\frac{l}{a}\right)^{\frac{1}{n-1}} - s = a\left(\frac{l}{a}\right)^{\frac{n}{n-1}} - a,$$

$$s\left\{\left(\frac{l}{a}\right)^{\frac{1}{n-1}} - 1\right\} = a\left(\frac{l}{a}\right)^{\frac{n}{n-1}} - a,$$

$$s = \frac{a\left(\frac{l}{a}\right)^{\frac{n}{n-1}} - a}{\left(\frac{l}{a}\right)^{\frac{1}{n-1}} - 1}$$

$$= \frac{\sqrt[n-1]{l^n} - \sqrt[n]{a^n}}{\sqrt[n-1]{l} - \sqrt[n]{a}}$$

8. $l = ar^{n-1}$ (1)

$$s = \frac{a(r^n - 1)}{r - 1} \quad (2)$$

From (1), $a = \frac{l}{r^{n-1}}$.

From (2), $a = \frac{s(r-1)}{r^n - 1}$

$$\therefore \frac{s(r-1)}{r^n - 1} = \frac{l}{r^{n-1}},$$

$$s(r^n - r^{n-1}) = lr^n - l,$$

$$s = \frac{lr^n - l}{r^n - r^{n-1}}.$$

9. $l = ar^{n-1}$,

$$ar^{n-1} = l.$$

$$\therefore a = \frac{l}{r^{n-1}}.$$

10. $s = \frac{ar^n - a}{r - 1}$,

$$(r-1)s = (r^n - 1)a.$$

$$\therefore a = \frac{(r-1)s}{r^n - 1}$$

11. $s = \frac{rl - a}{r - 1}$,

$$(r-1)s = rl - a,$$

$$a = rl - (r-1)s.$$

12. $l = ar^{n-1}$ (1)

$$s = \frac{rl - a}{r - 1} \quad (2)$$

From (1), $r = \left(\frac{l}{a}\right)^{\frac{1}{n-1}}$.

From (2), $r = \frac{s - a}{s - l}$

$$\therefore \left(\frac{l}{a}\right)^{\frac{1}{n-1}} = \frac{s-a}{s-l}$$

$$\therefore \frac{l}{a} = \frac{(s-a)^{n-1}}{(s-l)^{n-1}}.$$

$$\therefore a(s-a)^{n-1} - l(s-l)^{n-1} = 0.$$

13. $l = ar^{n-1}$,

$$r^{n-1} = \frac{l}{a}.$$

$$\therefore r = \sqrt[n-1]{\frac{l}{a}}$$

14.

$$s = \frac{a(r^n-1)}{r-1},$$

$$rs - s = ar^n - a,$$

$$rs - ar^n = s - a,$$

$$ar^n = rs - (s-a).$$

$$\therefore r^n = \frac{s}{a}r - \frac{s-a}{a}.$$

$$\therefore r^n - \frac{s}{a}r + \frac{s-a}{a} = 0.$$

15.

$$s = \frac{rl-a}{r-1}.$$

$$rs - s = rl - a,$$

$$rs - rl = s - a,$$

$$r(s-l) = s - a.$$

$$\therefore r = \frac{s-a}{s-l}$$

16.

$$l = ar^{n-1}.$$

$$s = \frac{a(r_n - 1)}{r-1}.$$

Then

$$a = \frac{l}{r^{n-1}},$$

$$a = \frac{s(r-1)}{r^n - 1}.$$

$$\therefore \frac{l}{r^{n-1}} = \frac{s(r-1)}{r^n - 1}.$$

$$lr^n - l = sr^n - sr^{n-1},$$

$$sr^n - sr^{n-1} - lr^n + l = 0,$$

$$r^n(s-l) - sr^{n-1} + l = 0,$$

$$r^n - \frac{s}{s-l}r^{n-1} + \frac{l}{s-l} = 0.$$

17.

$$l = ar^{n-1}.$$

$$\therefore r^{n-1} = \frac{l}{a}.$$

$$\therefore (n-1)\log r = \log l - \log a.$$

$$\therefore n - 1 = \frac{\log l - \log a}{\log r}.$$

$$\therefore n = \frac{\log l - \log a}{\log r} + 1.$$

18.

$$s = \frac{a(r^n - 1)}{r-1}.$$

$$s(r-1) = ar^n - a,$$

$$ar^n = a + s(r-1).$$

$$\log a + n\log r = \log[a + s(r-1)],$$

$$n\log r = \log[a + s(r-1)] - \log a.$$

$$\therefore n = \frac{\log[a + (r-1)s] - \log a}{\log r}.$$

19.

$$r = \sqrt[n-1]{\frac{l}{a}},$$

$$s = \frac{rl-a}{r-1},$$

$$sr - s = rl - a,$$

$$r = \frac{s-a}{s-l}.$$

$$\therefore \sqrt[n-1]{\frac{l}{a}} = \frac{s-a}{s-l}.$$

$$\therefore \frac{l}{a} = \left(\frac{s-a}{s-l}\right)^{n-1}.$$

$$\therefore \log l - \log a = (n-1)\{\log(s-a) - \log(s-l)\}.$$

$$\therefore n-1 = \frac{\log l - \log a}{\log(s-a) - \log(s-l)}.$$

$$\therefore n = \frac{\log l - \log a}{\log(s-a) - \log(s-l)} + 1.$$

20.

$$l = ar^{n-1}.$$

$$\therefore a = \frac{l}{r^{n-1}}.$$

$$s = \frac{rl-a}{r-1}.$$

$$\therefore a = rl - (r-1)s.$$

$$\therefore \frac{l}{r^{n-1}} = rl - (r-1)s.$$

$$\log l - (n-1)\log r = \log\{rl - (r-1)s\},$$

$$(n-1)\log r = \log l - \log[rl - (r-1)s].$$

$$\therefore n = \frac{\log l - \log[rl-(r-1)s]}{\log r} + 1.$$

Exercise 110.

1. Find the seventh term of 2, 6, 18.....
   sixth term of 3, 6, 12.....
   ninth term of 6, 3, $1\frac{1}{2}$.....
   eighth term of 1, -2, 4.....
   twelfth term of x^3, x^4, x^5.....
   fifth term of $4a$, $-6ma^2$, $9m^2a^3$.....

$$l = ar^{n-1}.$$

By substitution,

seventh term of 2, 6, 18 ····· $= 2 \times 3^6 = 1458$;

sixth term of 3, 6, 12 ····· $= 3 \times 2^5 = 96$;

ninth term of 6, 3, $1\frac{1}{2}$ ····· $= 6(\frac{1}{2})^8 = \frac{3}{128}$;

eighth term of 1, -2, 4 ····· $= -2^7 = -128$;

twelfth term of x^3, x^4, x^5 ····· $= x^3 \times x^{11} = x^{14}$;

fifth term of $4a$, $-6ma^2$, $9m^2a^2$ ·····

$$= 4a \times \left(-\frac{3am}{2}\right)^{5-1} = 20\tfrac{1}{4}\, a^5m^4.$$

2. Find the geometrical mean between $18x^3y$ and $30xy^3z$.

Let $a = 18x^3y$,

and $b = 30xy^3z$.

If a and b denote two numbers, and G their geometrical means, then

$$\frac{G}{a} = \frac{b}{G}$$

$$\therefore G = \sqrt{ab}.$$

$$\therefore G = \sqrt{18x^3y \times 30xy^3z}$$

$$= \sqrt{540x^4y^4z}$$

$$= 6x^2y^2\sqrt{15z}.$$

3. Find the ratio when the first and third terms are 5 and 80 respectively.

$$l = ar^{n-1},$$

$$r = \sqrt[n-1]{\frac{l}{a}}$$

$$= \sqrt[3-1]{\frac{80}{5}}$$

$$= \sqrt{16}$$

$$= 4.$$

4. Insert two geometrical means between 8 and 125, and three between 14 and 224.

Let m = number of means.

Then $m + 2 = n$,

$$l = ar^{m-1} \quad (1)$$

$$l = ar^{m+1} \quad (2)$$

$$\therefore r^{m+1} = \frac{l}{a} \quad (3)$$

$$r^2 = 1\tfrac{3}{5}.$$

$$\therefore r = \tfrac{4}{5} = 2\tfrac{1}{2}.$$

Hence, the series is 8, 20, 50, 125.

From (3), $r^{m+1} = \frac{l}{a}$,

$$r^4 = \tfrac{2}{1}\tfrac{5}{4}\tfrac{6}{4} = 16.$$

$$\therefore r = 2.$$

Hence, the series is 14, 28, 56, 112, 224.

5. If $a = 2$ and $r = 3$, which term will be equal to 162?

$$l = ar^{n-1},$$

$$r^{n-1} = \frac{l}{a},$$

$$(n-1)\log r = \log l - \log a.$$

$$\therefore n - 1 = \frac{\log l - \log a}{\log r},$$

$$n = \frac{\log l - \log a}{\log r} + 1 \quad (1)$$

Substitute values of a, r, and l in (1),

$$n = \frac{2.2095 - 0.3010}{0.4771} + 1$$

$$= 4 + 1$$

$$= 5.$$

6. The fifth term of a geometrical series is 48, and the ratio 2. Find the first and seventh terms.

$$l = ar^{n-1}.$$

$$\therefore a = \frac{l}{r^{n-1}}$$

$$= \frac{48}{2^4} = 3.$$

$$l = ar^{n-1}$$

$$= 3 \times 2^6 = 192.$$

7. Find the sum of

$3+6+12+\cdots\cdots$ to eight terms.

$1-3+9-\cdots\cdots$ to seven terms.

$8+4+2+\cdots\cdots$ to ten terms.

$0.1+0.5+2.5+\cdots$ to seven terms.

$m-\frac{m}{4}+\frac{m}{16}-\cdots\cdots$ to five terms.

$$s=\frac{a(r^n-1)}{r-1}.$$

Substitute values:

$$\left.\begin{matrix}a=3\\n=8\\r=2\end{matrix}\right\}\ s=\frac{3(2^8-1)}{2-1}=765;$$

$$\left.\begin{matrix}a=1\\n=7\\r=-3\end{matrix}\right\}\ s=\frac{1(-3^7-1)}{-3-1}=547;$$

$$\left.\begin{matrix}a=8\\n=10\\r=\frac{1}{2}\end{matrix}\right\}\ s=\frac{8[(\frac{1}{2})^{10}-1]}{\frac{1}{2}-1}=15\tfrac{63}{64};$$

$$\left.\begin{matrix}a=1\\n=7\\r=5\end{matrix}\right\}\ s=\frac{1(5^7-1)}{5-1}=1953.1;$$

$$\left.\begin{matrix}a=m\\n=5\\r=-\frac{1}{4}\end{matrix}\right\}\ s=\frac{m[(-\frac{1}{4})^5-1]}{-\frac{1}{4}-1}=\frac{205m}{256}.$$

8. The population of a city increases in four years from 10,000 to 14,641. What is the rate of increase?

$$l=ar^{n-1},$$

$$r^{n-1}=\frac{l}{a},$$

$$r=\sqrt[n-1]{\frac{l}{a}}$$

$$=\sqrt[4]{\frac{14641}{10000}}$$

$$=\frac{11}{10},$$

$$\frac{11}{10}-\frac{10}{10}=\frac{1}{10},$$

$\frac{1}{10}=10\%$ increase.

9. The sum of four numbers in geometrical progression is 200, and the first term is 5. Find the ratio.

$$l = ar^{n-1},$$

$$l = 5r^3,$$

$$\left.\begin{matrix} s = 200 \\ n = 4 \\ a = 5 \end{matrix}\right\} r = \frac{s-a}{s-l},$$

$$r = \frac{200-5}{200-5r^3},$$

$$200r - 5r^4 = 200 - 5,$$

$$40r - r^4 = 40 - 1,$$

$$r^4 - 40r = -39,$$

$$r^4 - 40r + 39 = 0,$$

$$(r-3)(r^3 + 3r^2 + 9r - 13) = 0.$$

$$\therefore r - 3 = 0.$$

$$\therefore r = 3.$$

10. Find the sum of eight terms of a series whose last term is 1 and fifth term $\frac{1}{2}$.

$$l = ar^{n-1}.$$

$$\therefore r^{n-1} = \frac{l}{a}.$$

Then $$r^3 = 1 + \tfrac{1}{8}.$$

$$\therefore r = 2.$$

From equations $$l = ar^{n-1},$$

and $$s = \frac{a(r^n-1)}{r-1},$$

$$\frac{l}{r^n-1} = \frac{s(r-1)}{r^n-1},$$

$$lr^n - l = s(r^n - r^{n-1}).$$

$$\therefore s = \frac{lr^n - l}{r^n - r^{n-1}}.$$

Substitute given values, $$s = \frac{1(2)^8 - 1}{(2)^8 - (2)^7},$$

$$s = \tfrac{255}{128}.$$

$$\therefore s = 1\tfrac{127}{128}.$$

11. In an odd number of terms, show that the product of the first and last will be equal to the square of the middle term.

Let x = first term,

and y = ratio.

Then xy = second term,

xy^2 = third term.

$x(xy^2)$ = product of first and last terms,

x^2y^2 = square of middle term.

But $x(xy^2) = x^2y^2$.

Therefore, the product of the first and last terms is equal to the square of the middle term.

12. The product of four terms of a geometrical series is 4, and the fourth term is 4. Determine the series.

Let x = first term,

and y = ratio.

Then x, xy, xy^2, xy^3 = the series.

Hence, $x^4y^6 = 4$ (1)

Also, $xy^3 = 4$ (2)

Divide (1) by (2), $x^3y^3 = 1$.

$\therefore xy = 1$ (3)

Divide (2) by (3), $y^2 = 4$.

$\therefore y = \pm 2$.

From (2), $x = \frac{1}{2}$.

Hence, the series is $\frac{1}{2}$, 1, 2, 4.

13. If from a line one-third be cut off, then one-third of the remainder, and so on, what fraction of the whole will remain when this has been done five times?

$l = ar^{n-1}$.

Substitute values, $l = 1(\frac{2}{3})^5$.

$\therefore l = \frac{32}{243}$.

14. Of three numbers in geometrical progression, the sum of the first and second exceeds the third by 3, and the sum of the first and third exceeds the second by 21. What are the numbers?

Let x = first of series,
and r = ratio.
Then rx = second term of series,
and r^2x = third term of series.

$$x + rx - r^2x = 3 \quad (1)$$
$$x + r^2x - rx = 21 \quad (2)$$

Add, $2x = 24.$
$\therefore x = 12.$

Substitute values of x in (1),
$$12 + 12r - 12r^2 = 3,$$
$$12r - 12r^2 = -9,$$
$$4r^2 - 4r = 3.$$
Complete the square, $4r^2 - (\ ) + 1 = 4.$
Extract the root, $2r - 1 = \pm 2.$
$$2r = 3.$$
$$\therefore r = \tfrac{3}{2}.$$
Hence, the numbers are 12, 18, 27.

15. Find two numbers whose sum is $3\frac{1}{2}$ and geometrical mean $1\frac{1}{2}$.

Let x = one number,
and y = the other.
Then $x + y = 3\frac{1}{2}$ (1)
$$\sqrt{xy} = 1\tfrac{1}{2} \quad (2)$$
Square (2), $xy = \frac{9}{4}.$
$$\therefore x = \frac{9}{4y}$$
Substitute value of x in (1), $\frac{9}{4y} + y = 1\frac{3}{4},$
$$9 + 4y^2 = 13y,$$
$$4y^2 - 13y = -9,$$
$$4y^2 - (\ ) + (\tfrac{13}{4})^2 = \tfrac{25}{16}.$$
Extract the root, $2y - \frac{13}{4} = \pm \frac{5}{4},$
$$2y = \tfrac{13}{4} \text{ or } 2.$$
$$\therefore y = \tfrac{9}{4} \text{ or } 1.$$
Substitute values of y in (1), $x = 1$ or $2\frac{1}{4}$.
Hence, the numbers are 1 and $2\frac{1}{4}$.

16. A glass of wine is taken from a decanter that holds ten glasses, and a glass of water poured in. When this has been done five times, what part of the contents is wine?

Since there are ten glasses of wine at first, when one glass of water is substituted for one of wine, there will be $\frac{9}{10}$ as much wine in the decanter as before.

Since this is done 5 times,

$$\therefore l = (1)(\tfrac{9}{10})^5$$
$$= (1)(\tfrac{59049}{100000})$$
$$= 0.59049.$$

17. There are four numbers, such that the sum of the first and the last is 11, and the sum of the others is 10. The first three of these numbers are in arithmetical progression, and the last three in geometrical progression. Find the numbers.

Let x, y, $10-y$, $11-x$, denote the numbers.

By Arithmetical Progression,

$$y - x = 10 - 2y. \tag{1}$$

By Geometrical Progression,

$$\frac{10-y}{y} = \frac{11-x}{10-y}. \tag{2}$$

From (1), $x = 3y - 10.$ (3)

From (2), $4y^2 - 41y = -100.$ (4)

Whence, $4y^2 - 61 + (\frac{41}{4})^2 = \frac{81}{16},$

and $2y - \frac{41}{4} = \pm \frac{9}{4}.$

$\therefore y = 6\frac{1}{4}$ or $4.$

Substitute 4 for y in (3), $x = 2.$

Hence the numbers are 2, 4, 6, 9.

18. Find three numbers in geometrical progression whose sum is 13 and the sum of their squares 91.

Let x, xy, xy^2 = the numbers.

$$x + xy + xy^2 = 13 \tag{1}$$
$$x^2 + x^2y^2 + x^2y^4 = 91 \tag{2}$$

Divide (2) by (1), $x - xy + xy^2 = 7$

(1) is $x + xy + xy^2 = 13$

Subtract, $-2xy = -6$

$$\therefore xy = 3.$$
$$\therefore x = \frac{3}{y}.$$

Substitute value of x in (1),

$$\frac{3}{y} + 3 + 3y = 13,$$
$$3 + 3y + 3y^2 = 13y,$$
$$3y^2 - 10y = -3,$$
$$36y^2 - (\ ) + 100 = 64,$$
$$6y - 10 = \pm 8.$$
$$\therefore y = 3,$$
and $$x = 1.$$

Hence, the numbers are 1, 3, 9.

19. The difference between two numbers is 48, and the arithmetical mean exceeds the geometrical by 18. Find the numbers.

Let x = larger number,
and y = smaller number.

$$x - y = 48 \qquad (1)$$
$$\frac{x+y}{2} = \text{arithmetical mean},$$
$$\sqrt{xy} = \text{geometrical mean},$$
$$\frac{x+y}{2} = \sqrt{xy} + 18,$$
$$x + y = 2\sqrt{xy} + 36,$$
$$x - 2\sqrt{xy} + y = 36,$$
$$\sqrt{x} - \sqrt{y} = \pm 6 \qquad (2)$$

Divide (1) by (2), $\sqrt{x} + \sqrt{y} = \pm 8 \qquad (3)$

From (2) and (3), $2\sqrt{x} = 14,$
$2\sqrt{y} = 2.$
$\therefore x = 49,$
and $y = 1.$

20. There are four numbers in geometrical progression, the second of which is less than the fourth by 24, and the sum of the extremes is to the sum of the means as 7 to 8. Find the numbers.

Let x = first number,
and y = ratio.
Then x, xy, xy^2, xy^3 = numbers.

$$xy^3 - xy = 24 \qquad (1)$$
$$x + xy^3 : xy + xy^2 :: 7 : 3 \qquad (2)$$

$$3(x+xy^2)=7(xy+xy^2),$$
$$3(1+y^2)=7y(1+y).$$

Divide by $1+y$, $3(1-y+y^2)=7y,$
$$3y^2-10y=-3,$$
$$36y^2-(\ )+100=64,$$
$$6y-10=\pm 8,$$
$$6y=18.$$
$$\therefore y=3.$$

Substitute in (1), $27x-3x=24,$
$$24x=24.$$
$$\therefore x=1.$$

Hence, the numbers are 1, 3, 9, 27.

21. A number consists of three digits in geometrical progression. The sum of the digits is 13; and if 792 be added to the number, the digits in the units' and hundreds' places will be interchanged. Find the number.

Let $x=$ first digit,
$rx=$ second digit,
and $r^2x=$ third digit.

$$x+rx+r^2x=13 \qquad (1)$$
$$100x+10rx+r^2x+792=100r^2x+10rx+x,$$
$$-99r^2x+99x=-792.$$
$$r^2x-x=8 \qquad (2)$$
$$x+rx+r^2x=13$$

Subtract, $2x+rx=5$
$$\therefore x=\frac{5}{2+r}.$$

Substitute value of x in (2),
$$\frac{5r^2}{2+r}-\frac{5}{2+r}=8,$$
$$5r^2-5=16+8r,$$
$$5r^2-8r=21,$$
$$100r^2-(\ )+64=484,$$
$$10r-8=\pm 22,$$
$$10r=30.$$
$$\therefore r=3.$$

From (1), $x+3x+9x=13.$
$$\therefore x=1.$$

Hence, the number is 139.

22. Find the limits of the sums of the following infinite series:

$4 + 2 + 1 + \cdots\cdots$

$\frac{1}{2} + \frac{1}{3} + \frac{2}{9} + \cdots\cdots$

$\frac{1}{3} - \frac{1}{18} + \frac{1}{54} - \cdots\cdots$

$1 - \frac{2}{5} + \frac{4}{25} - \cdots\cdots$

$\frac{1}{5} + \frac{1}{15} + \frac{1}{45} + \cdots\cdots$

$2 - 1\frac{1}{3} + \frac{8}{9} - \cdots\cdots$

$0.1 + 0.01 + 0.001 + \cdots\cdots$

$0.868686\ldots\ldots$

$0.54444\ldots\ldots$

$0.83636\ldots\ldots$

(1) $\frac{a}{1-r}$. Formula.

$a = 4,$

$r = \frac{1}{2}.$

$\therefore \frac{a}{1-r} = \frac{4}{1-\frac{1}{2}} = 8.$

(2) $a = \frac{1}{2},$

$r = \frac{2}{3}.$

$\therefore \frac{a}{1-r} = \frac{\frac{1}{2}}{1-\frac{2}{3}} = 1\frac{1}{2}.$

(3) $a = \frac{1}{4},$

$r = -\frac{1}{4}.$

$\therefore \frac{a}{1-r} = \frac{\frac{1}{4}}{1-(-\frac{1}{4})}$

$= \frac{\frac{1}{4}}{1+\frac{1}{4}} = \frac{1}{5}.$

(4) $a = 1,$

$r = -\frac{2}{3}.$

$\therefore \frac{a}{1-r} = \frac{1}{1-(-\frac{2}{3})}$

$= \frac{1}{1+\frac{2}{3}} = \frac{3}{5}.$

(5) $a = \frac{1}{3},$

$r = \frac{1}{3}.$

$\therefore \frac{a}{1-r} = \frac{\frac{1}{3}}{1-\frac{1}{3}}$

$= \frac{\frac{1}{3}}{\frac{2}{3}} = \frac{3}{10}.$

(6) $a = 2,$

$r = -\frac{2}{3}.$

$\therefore \frac{a}{1-r} = \frac{2}{1+\frac{2}{3}}$

$= \frac{2}{\frac{5}{3}} = \frac{6}{5}.$

(7) $a = 0.1,$

$r = 0.1.$

$\therefore \frac{a}{1-r} = \frac{0.1}{1-0.1} = \frac{1}{9}.$

(8) $a = 0.86,$

$r = 0.01.$

$\therefore \frac{a}{1-r} = \frac{0.86}{1-0.01} = \frac{86}{99}.$

(9) $a = \frac{4}{100},$

$r = \frac{1}{10}.$

$\therefore \frac{a}{1-r} = \frac{\frac{4}{100}}{\frac{9}{10}} = \frac{4}{90},$

$\frac{4}{90} + \frac{5}{10} = \frac{49}{90}.$

(10) $a = \frac{86}{10000},$

$r = \frac{1}{100}.$

$\therefore \frac{a}{1-r} = \frac{\frac{86}{10000}}{\frac{99}{100}} = \frac{2}{55},$

$\frac{2}{55} + \frac{8}{10} = \frac{46}{55}.$

Exercise 111.

1. Insert four harmonical means between 2 and 12.

$$d = \frac{l-a}{m+1}.$$

$$\therefore d = \frac{\frac{1}{2} - \frac{1}{12}}{5} = \frac{1}{12}.$$

$\frac{5}{12}, \frac{4}{12}, \frac{3}{12}, \frac{2}{12}$ = arithmetical means,

$\therefore 2\frac{2}{5}, 3, 4, 6$ = harmonical means.

2. Find two numbers whose difference is 8, and the harmonical mean between them $1\frac{1}{5}$.

Let x = one number.

Then $x + 8$ = the other number.

$$H = \frac{2ab}{a+b}$$

$$\therefore \frac{9}{5} = \frac{2x^2 + 16x}{2x + 8}.$$

$$18x + 72 = 10x^2 + 80x,$$

$$10x^2 + 62x = 72,$$

$$100x^2 + (\ ) + (31)^2 = 1681,$$

$$10x + 31 = \pm 41,$$

$$x = 1 \text{ or } -7\tfrac{1}{5},$$

$$x + 8 = 9 \text{ or } \tfrac{4}{5}.$$

Hence, the numbers are 9 and 1.

3. Find the seventh term of the harmonical series $3, 3\frac{3}{7}, 4, \ldots$.

$$l = a + (n-1)d.$$

Here $a = \frac{1}{3}$, $n = 7$, $d = \frac{7}{24} - \frac{7}{21} = -\frac{1}{24}$.

$$\therefore l = \tfrac{1}{3} - \tfrac{1}{4}.$$

$$\therefore l = \tfrac{1}{12}.$$

Hence, the seventh term is 12.

4. Continue to two terms each way the harmonical series, two consecutive terms of which are 15, 16.

Harmonical series, 15, 16.

Arithmetical series, $\frac{1}{15}$, $\frac{1}{16}$.

$$d = \frac{1}{15} - \frac{1}{15} = -\frac{1}{240}.$$

Subtract d from first term, $\frac{1}{15} + \frac{1}{240} = \frac{17}{240}$.

Subtract d from $\frac{17}{240}$, $\frac{17}{240} + \frac{1}{240} = \frac{18}{240}$.

Add d to last term, $\frac{1}{16} - \frac{1}{240} = \frac{14}{240}$.

Add d to $\frac{14}{240}$, $\frac{14}{240} - \frac{1}{240} = \frac{13}{240}$.

Hence, arithmetical series is $\frac{18}{240}$, $\frac{17}{240}$ ····· $\frac{14}{240}$, $\frac{13}{240}$.

Hence, harmonical series is $13\frac{1}{3}$, $14\frac{2}{17}$ ····· $17\frac{1}{7}$, $18\frac{6}{13}$.

5. The first two terms of a harmonical series are 5 and 6. Which term will equal 30?

$$l = a + (n-1)d,$$

$$n = \frac{l-a}{d} + 1,$$

$$n = \frac{\frac{1}{5} - \frac{1}{30}}{\frac{1}{30}} + 1,$$

$$n = \frac{5}{30} \times \frac{30}{1} + 1,$$

$$n = 6.$$

6. The fifth and ninth terms of a harmonical series are 8 and 12. Find the first four terms.

$$\frac{l-a}{m+1} = d,$$

$$\frac{\frac{1}{12} - \frac{1}{8}}{4} = d,$$

$$-\frac{1}{96} = d,$$

$$\frac{1}{8} + \frac{1}{96} = \frac{13}{96} = \frac{1}{7\frac{5}{13}},$$

$$\frac{13}{96} + \frac{1}{96} = \frac{14}{96} = \frac{1}{6\frac{6}{7}},$$

$$\frac{14}{96} + \frac{1}{96} = \frac{15}{96} = \frac{1}{6\frac{2}{5}},$$

$$\frac{15}{96} + \frac{1}{96} = \frac{16}{96} = \frac{1}{6}.$$

Hence, the first four terms are 6, $6\frac{2}{5}$, $6\frac{6}{7}$, $7\frac{5}{13}$.

7. The difference between the arithmetical and harmonical means between two numbers is $1\frac{4}{5}$, and one of the numbers is four times the other. Find the numbers.

Let x and y = the numbers.

Then $\frac{x+y}{2}$, $\frac{2xy}{x+y}$ = the arithmetical and harmonical means.

Hence, $x = 4y$ (1)

and $\frac{x+y}{2} - \frac{2xy}{x+y} = \frac{9}{5}$ (2)

Substitute $4y$ for x in (2),

$$\frac{5y}{2} - \frac{8y^2}{5y} = \frac{9}{5}.$$

$$\therefore y = 2,$$

and $x = 8$.

8. Find the arithmetical, geometrical, and harmonical means between two numbers a and b; and show that the geometrical mean is a mean proportional between the arithmetical and harmonical means. Also, arrange these means in order of magnitude.

Arithmetical, $A - a = b - A$.

$$\therefore A = \frac{a+b}{2}.$$

Geometrical, $\frac{G}{a} = \frac{b}{G}$.

$$\therefore G = \sqrt{ab}.$$

Harmonical, $\frac{1}{H} - \frac{1}{a} = \frac{1}{b} - \frac{1}{H}$.

$$\therefore \frac{2}{H} = \frac{1}{a} + \frac{1}{b} = \frac{a+b}{ab}$$

$$\therefore H = \frac{2ab}{a+b}.$$

Thn $\frac{a+b}{2}$ $\sqrt{ab} :: \sqrt{ab} : \frac{2ab}{a+b}$.

The order of magnitude is $\frac{a+b}{2}$, $\sqrt{ab}$, $\frac{2ab}{a+b}$.

9. The arithmetical mean between two numbers exceeds the geometrical by 13, and the geometrical exceeds the harmonical by 12. What are the numbers?

Let a and b = the numbers.

Then $\frac{a+b}{2}$, $\sqrt{ab}$, $\frac{2ab}{a+b}$ = the arithmetical, geometrical, and harmonical means.

Hence $$\frac{a+b}{2} - \sqrt{ab} = 13 \qquad (1)$$

$$\sqrt{ab} - \frac{2ab}{a+b} = 12 \qquad (2)$$

Add (1) and (2), $$\frac{a+b}{2} - \frac{2ab}{a+b} = 25 \qquad (3)$$

Transpose in (1), $$\frac{a+b}{2} - 13 = \sqrt{ab},$$

$$a + b - 26 = 2\sqrt{ab} \qquad (4)$$

Square (4), $a^2 + 2ab + b^2 - 52a - 52b + 676 = 4ab$

Simplify (3), $a^2 + 2ab + b^2 - 50a - 50b = 4ab$

Subtract, $2a + 2b = 676$

$$a + b = 338 \qquad (5)$$

Substitute value of $a + b$ in (1),

$$169 - \sqrt{ab} = 13,$$

$$156 = \sqrt{ab}.$$

From (5), $a = 338 - b.$

$$\therefore 156 = \sqrt{(338 - b)b}.$$

$$\therefore 156^2 = 338b - b^2.$$

$$b^2 - 338b = -24336,$$

$$b^2 - (\ ) + (169)^2 = 4225,$$

$$b - 169 = \pm 65.$$

$$\therefore b = 234 \text{ or } 104,$$

and $a = 104$ or 234.

10. The sum of three terms of a harmonical series is 11, and the sum of their squares is 49. Find the numbers.

Let x and y = first and last terms.

Then $\frac{2xy}{x+y}$ = middle term.

Hence, $$x + y + \frac{2xy}{x+y} = 11 \qquad (1)$$

and $$x^2 + y^2 + \frac{4x^2y^2}{(x+y)^2} = 49 \qquad (2)$$

Square (1), and subtract (2) from the result,

$$6xy = 72, \text{ and } xy = 12 \qquad (3)$$

Substitute 12 for xy in (1), and clear of fractions,

$$(x+y)^2 - 11(x+y) = -24.$$

Complete the square and extract the root,

$$x + y = 8 \qquad (4)$$

Square (4), $x^2 + 2xy + y^2 = 64$

From (3), $4xy = 48$

$$x^2 - 2xy + y^2 = 16$$

$$x - y = \pm 4 \qquad (5)$$

From (4) and (5), $x = 6$, and $y = 2$.

Hence, the numbers are 6, 3, 2.

11. When a, b, c are in harmonical progression, show that $a : c :: a - b : b - c$.

If a, b, c are a harmonical series, $\frac{1}{b} - \frac{1}{a} = \frac{1}{c} - \frac{1}{b}$.

Multiply by abc, $ac - bc = ab - ac$,

or $c(a-b) = a(b-c)$,

or $a : c :: a - b : b - c$.

EXERCISE 112.

1. $\frac{1}{2+3x}$.

Divide 1 by $2 - 3x$.

Then, $\frac{1}{2-3x} = \frac{1}{2} + \frac{3}{4}x + \frac{9}{8}x^2 + \frac{27}{16}x^3 + \cdots\cdots$

2. $\frac{1+x}{2+3x}$.

Divide $1 + x$ by $2 + 3x$.

Then, $\frac{1+x}{2+3x} = \frac{1}{2} - \frac{1}{4}x + \frac{3}{8}x^2 - \frac{9}{16}x^3 + \cdots\cdots$

3. $\dfrac{3-2x}{4-3x}$

Divide $3-2x$ by $4-3x$.

Then, $\dfrac{3-2x}{4-3x} = \frac{3}{4} + \frac{1}{16}x + \frac{3}{64}x^2 + \frac{9}{256}x^3 + \cdots\cdots$

4. $\dfrac{1-x}{1-x+x^2}$

Let $\dfrac{1-x}{1-x+x^2} = A + Bx + Cx^2 + Dx^3 + Ex^4 + Fx^5 + \cdots\cdots$

Then, $1-x = A + (B-A)x + (C-B+A)x^2 + (D-C+B)x^3 + (E-D+C)x^4 + (F-E+D)x^5 + \cdots\cdots$

$$\begin{aligned} \therefore\ A &= 1, & A &= 1; \\ B-A &= -1, & B &= 0; \\ C-B+A &= 0, & C &= -1; \\ D-C+B &= 0, & D &= -1; \\ E-D+C &= 0, & E &= 0; \\ F-E+D &= 0, & F &= 1. \end{aligned}$$

$$\therefore \frac{1-x}{1-x+x^2} = 1 - x^2 - x^3 + x^5 + \cdots\cdots$$

5. $\dfrac{1}{1-2x+3x^2}$

Let $\dfrac{1}{1-2x+3x^2} = A + Bx + Cx^2 + Dx^3 + Ex^4 + Fx^5 + \cdots\cdots$

Then, $1 = A + (B-2A)x + (C-2B+3A)x^2 + (D-2C+3B)x^3 + (E-2D+3C)x^4 + \cdots\cdots$

$$\begin{aligned} \therefore\ A &= 1, & A &= 1; \\ B-2A &= 0, & B &= 2; \\ C-2B+3A &= 0, & C &= 1; \\ D-2C+3B &= 0, & D &= -4; \\ E-2D+3C &= 0, & E &= -11. \end{aligned}$$

$$\therefore \frac{1}{1-2x+3x^2} = 1 + 2x + x^2 - 4x^3 - 11x^4 - \cdots\cdots$$

6. $\dfrac{5-2x}{1+3x-x^2}$

Let $\dfrac{5-2x}{1+3x-x^2} = A + Bx + Cx^2 + Dx^3 + Ex^4 + \cdots\cdots$

Then, $5-2x = A + (B+3A)x + (C+3B-A)x^2 + (D+3C-B)x^3 + (E+3D-C)x^4 + \cdots\cdots$

$$\begin{aligned} \therefore A &= 5, & A &= 5; \\ B+3A &= -2, & B &= -17; \\ C+3B-A &= 0, & C &= 56; \\ D+3C-B &= 0, & D &= -185; \\ E+3D-C &= 0, & E &= 601. \end{aligned}$$

$$\therefore \frac{5-2x}{1+3x-x^2} = 5 - 17x + 56x^2 - 185x^3 + 611x^4 - \cdots\cdots$$

7. $\dfrac{4x-6x^2}{1-2x+3x^2}$

Let $\dfrac{4x-6x^2}{1-2x+3x^2} = A + Bx + Cx^2 + Dx^3 + Ex^4 + \cdots\cdots$

Then, $4x-6x^2 = A + (-2A+B)x + (3A-2B+C)x^2 + (3B-2C+D)x^3 + (3C-2D+E)x^4 + \cdots\cdots$

$$\begin{aligned} \therefore A &= 0, & A &= 0; \\ -2A+B &= 4, & B &= 4; \\ 3A-2B+C &= -6, & C &= 2; \\ 3B-2C+D &= 0, & D &= -8; \\ 3C-2D+E &= 0, & E &= -22. \end{aligned}$$

$$\therefore \frac{4x-6x^2}{1-2x+3x^2} = 4x + 2x^2 - 8x^3 - 22x^4 - \cdots\cdots$$

EXERCISE 113.

Resolve into partial fractions:

1. $\dfrac{7x+1}{(x+4)(x-5)}$.

Assume $\dfrac{7x+1}{(x+4)(x-5)} = \dfrac{A}{x+4} + \dfrac{B}{x-5}$;

then $7x+1 = (A+B)x - 5A + 4B.$

$$\begin{aligned} \therefore A+B &= 7, & A &= 3, \\ 4B-5A &= 1, & B &= 4. \end{aligned}$$

$$\therefore \frac{7x+1}{(x+4)(x-5)} = \frac{3}{x+4} + \frac{4}{x-5}.$$

2. $\frac{6}{(x+3)(x+4)}$.

Assume $\frac{6}{(x+3)(x+4)} = \frac{A}{x+3} + \frac{B}{x+4}$

then $6 = (A+B)x + 4A + 3B$

$\therefore A + B = 0$

$4A + 3B = 6$

$\therefore A = 6$

$B = -6$

$\therefore \frac{6}{(x+3)(x+4)} = \frac{6}{x+3} - \frac{6}{x+4}$

3. $\frac{5x-1}{(2x-1)(x-5)}$.

Assume $\frac{5x-1}{(2x-1)(x-5)} = \frac{A}{2x-1} + \frac{B}{x-5}$

then $5x - 1 = (A+2B)x - 5A - B$

$\therefore A + 2B = 5$

$5A + B = 1$

$\therefore A = -\frac{1}{3}, B = \frac{8}{3}$

$\therefore \frac{5x-1}{(2x-1)(x-5)} = \frac{-\frac{1}{3}}{2x-1} + \frac{\frac{8}{3}}{x-5}$

$= \frac{8}{3(x-5)} - \frac{1}{3(2x-1)}$

4. $\frac{x-2}{x^2-3x-10} = \frac{x-2}{(x-5)(x+2)}$.

Assume $\frac{x-2}{(x-5)(x+2)} = \frac{A}{x-5} + \frac{B}{x+2}$

then $x - 2 = (A+B)x + 2A - 5B$

$\therefore A + B = 1$

$2A - 5B = -2$

$\therefore A = \frac{3}{7}, B = \frac{4}{7}$

$\therefore \frac{x-2}{x^2-3x-10} = \frac{3}{7(x-5)} + \frac{4}{7(x+2)}$

5. $\frac{3}{x^3-1} = \frac{3}{(x-1)(x^2+x+1)}$.

Assume $\frac{3}{(x-1)(x^2+x+1)} = \frac{A}{x-1} + \frac{Bx+C}{x^2+x+1}$

then $3 = (A+B)x^2 + (A-B+C)x + A - C$

$$\therefore A+B=0$$
$$A-B+C=0$$
$$A-C=3$$
$$\therefore A=1,\ B=-1,\ C=-2$$
$$\therefore \frac{3}{x^3-1}=\frac{1}{x-1}-\frac{x+2}{x^2+x+1}$$

6. $\frac{x^2-x-3}{x(x^2-4)}$.

Assume $\frac{x^2-x-3}{x(x^2-4)}=\frac{A}{x}+\frac{B}{x+2}+\frac{C}{x-2}$

then $x^2-x-3=(A+B+C)x^2+(-2B+2C)x-4A$

$$\therefore A+B+C=1$$
$$-2B+2C=-1$$
$$-4A=-3$$
$$\therefore A=\tfrac{3}{4},\ B=\tfrac{3}{8},\ C=-\tfrac{1}{8}$$
$$\therefore \frac{x^2-x-3}{x(x^2-4)}=\frac{3}{4x}+\frac{3}{8(x+2)}-\frac{1}{8(x-2)}.$$

7. $\frac{3x^2-4}{x^2(x+5)}$.

Assume $\frac{3x^2-4}{x^2(x+5)}=\frac{A}{x^2}+\frac{B}{x}+\frac{C}{x+5}$

then $3x^2-4=(B+C)x^2+(A+5B)x+5A$

$$\therefore B+C=3$$
$$A+5B=0$$
$$5A=-4$$
$$\therefore A=-\tfrac{4}{5},\ B=\tfrac{4}{25},\ C=\tfrac{71}{25}$$
$$\therefore \frac{3x^2-4}{x^2(x+5)}=-\frac{4}{5x^2}+\frac{4}{25x}+\frac{71}{25(x+5)}.$$

8. $\frac{7x^2-x}{(x-1)^2(x+2)}$.

Assume $\frac{7x^2-x}{(x-1)^2(x+2)}=\frac{A}{(x-1)^2}+\frac{B}{x-1}+\frac{C}{x+2}$

then $7x^2-x=(B+C)x^2+(A+B-2C)x+2A-2B+C$

$$\therefore B+C=7$$
$$A+B-2C=-1$$
$$2A-2B+C=0$$
$$\therefore A=2,\ B=\tfrac{11}{3},\ C=\tfrac{10}{3}$$
$$\therefore \frac{7x^2-x}{(x-1)^2(x+2)}=\frac{2}{(x-1)^2}+\frac{11}{3(x-1)}+\frac{10}{3(x+2)}.$$

9. $\dfrac{2x^3-7x+1}{x^3-1}$.

Assume $\dfrac{2x^3-7x+1}{x^3-1}=\dfrac{A}{x-1}+\dfrac{Bx+C}{x^2+x+1}$,

then $2x^3-7x+1=(A+B)x^2+(A-B+C)x+A-C$.

$\therefore A-B=2$.

$A-B+C=-7$,

$A-C=1$.

$\therefore A=-\frac{4}{3}$, $B=\frac{10}{3}$, $C=-\frac{7}{3}$.

$\therefore \dfrac{2x^3-7x+1}{x^3-1}=\dfrac{10x-7}{3(x^2+x+1)}-\dfrac{4}{3(x-1)}$.

Exercise 114.

1. $(1+2x)^5$

$=(1)^5+5(1)^4(2x)+10(1)^3(2x)^2+10(1)^2(2x)^3+5(1)(2x)^4+(2x)^5$

$=1+10x+40x^2+80x^3+80x^4+32x^5$.

2. $(x-3)^8$

$=x^8-8x^7(3)+28x^6(3)^2-56x^5(3)^3+70x^4(3)^4$

$\qquad -56x^3(3)^5+28x^2(3)^6-8x(3)^7+(3)^8$

$=x^8-24x^7+252x^6-1512x^5+5670x^4$

$\qquad -13608x^3+20412x^2-17496x+6561$.

3. $(2x-3y)^4$
$= (2x)^4 - 4(2x)^3(3y) + 6(2x)^2(3y)^2 - 4(2x)(3y)^3 + (3y)^4$
$= 16x^4 - 96x^3y + 216x^2y^2 - 216xy^3 + 81y^4.$

4. $(2-x)^3$
$= (2)^3 - 3(2)^2(x) + 3(2)(x)^2 - (x)^3$
$= 8 - 12x + 6x^2 - x^3.$

5. $\left(1-\frac{3y}{4}\right)^5$
$= (1)^5 - 5(1)^4\left(\frac{3y}{4}\right) + 10(1)^3\left(\frac{3y}{4}\right)^2 - 10(1)^2\left(\frac{3y}{4}\right)^3$
$+ 5(1)\left(\frac{3y}{4}\right)^4 - \left(\frac{3y}{4}\right)^5$
$= 1 - \frac{15y}{4} + \frac{45y^2}{8} - \frac{135y^3}{32} + \frac{405y^4}{256} - \frac{243y^5}{1024}$

6. $\left(1-\frac{x}{3}\right)^9$
$= 1 - 9\left(\frac{x}{3}\right) + 36\left(\frac{x}{3}\right)^2 - 84\left(\frac{x}{3}\right)^3 + 126\left(\frac{x}{3}\right)^4 - 126\left(\frac{x}{3}\right)^5$
$+ 84\left(\frac{x}{3}\right)^6 - 36\left(\frac{x}{3}\right)^7 + 9\left(\frac{x}{3}\right)^8 - 1\left(\frac{x}{3}\right)^9$
$= 1 - 3x + 4x^2 - \frac{28x^3}{9} + \frac{14x^4}{9} - \frac{14x^5}{27} + \frac{28x^6}{243} - \frac{4x^7}{243} + \frac{x^8}{729} - \frac{x^9}{19683}.$

7. The fourth term of $(2x-5y)^{12}$.

Substitute in formula values of n and r,

$$\frac{n(n-1)\ldots\ldots(n-r+2)}{1\times 2\ldots\ldots(r-1)}\,a^{n-r+1}x^{r-1}$$
$$= \frac{12\times 11\times 10}{1\times 2\times 3}(2x)^9(5y)^3$$
$$= -14080000x^9y^3.$$

8. The seventh term of $\left(\frac{x}{2}+\frac{y}{3}\right)^{10}$

$$= \frac{10\times 9\times 8\times 7}{1\times 2\times 3\times 4}\left(\frac{x}{2}\right)^4\left(\frac{y}{3}\right)^6$$
$$= \frac{35x^4y^6}{1944}.$$

9. The twelfth term of $(a^2 - ax)^{15}$

$$= \frac{15 \times 14 \times 13 \times 12}{1 \times 2 \times 3 \times 4} (a^2)^4 (ax)^{11}$$
$$= -1365\, a^{19} x^{11}.$$

10. The eighth term of $(5x^2y - 2xy^2)^9$

$$= -\frac{9 \times 8 \ldots\ldots 3}{2 \ldots\ldots 7} (5x^2y)^2 (2xy^2)^7$$
$$= -36(25x^4y^2)(128x^7y^{14})$$
$$= -115200\, x^{11} y^{16}.$$

11. The middle term of $\left(\frac{x}{y} + \frac{y}{x}\right)^8$

$$= \frac{8 \times 7 \times 6 \times 5}{1 \times 2 \times 3 \times 4} \left(\frac{x}{y}\right)^4 \left(\frac{y}{x}\right)^4$$
$$= 70.$$

12. The middle term of $\left(\frac{x}{y} - \frac{y}{x}\right)^{10}$

$$= -\frac{10 \times 9 \times 8 \times 7 \times 6}{1 \times 2 \times 3 \times 4 \times 5} \left(\frac{x}{y}\right)^5 \left(\frac{y}{x}\right)^5$$
$$= -252.$$

13. The two middle terms of $\left(\frac{x}{y} - \frac{y}{x}\right)^7$.

The two middle terms are the fourth and fifth.

The fourth term $= \frac{7 \times 6 \times 5 \times 4}{1 \times 2 \times 3 \times 4} \left(\frac{x}{y}\right)^4 \left(\frac{y}{x}\right)^3$

$$= -\frac{35x}{y}.$$

The fifth term $= \frac{7 \times 6 \times 5}{1 \times 2 \times 3} \left(\frac{x}{y}\right)^3 \left(\frac{y}{x}\right)^4$

$$= \frac{35y}{x}.$$

14. The *rth* term of $(2a + x)^n$

$$= \frac{n(n-1) \ldots\ldots (n-r+2)}{1 \times 2 \ldots\ldots (r-1)} (2a)^{n-r+1} x^{r-1}.$$

15. The *rth* term from the end of $(2a+x)^n$

$$= \frac{n(n-1)\ldots(n-r+2)}{1\times 2\ldots(r-1)}(2a)^{r-1}x^{n-r+1}.$$

16. The $(r+4)th$ term of $(a+x)^n$

$$= \frac{n(n-1)\ldots(n-r-2)}{1\times 2\ldots(r+3)}a^{n-r-3}x^{r+3}.$$

17. The middle term of $(a+x)^{2n}$

$$= \frac{2n(2n-1)\ldots(2n-(n+1)+2)}{1\times 2\ldots(n+1-1)}a^{2n-n-1+1}x^n$$

$$= \frac{2n(2n-1)\ldots(n+1)}{1\times 2\ldots n}a^nx^n.$$

Multiply both terms by $\lfloor n$,

$$(n+1)th \text{ term} = \frac{\lfloor 2n}{(\lfloor n)^2}a^nx^n.$$

18. Expand $(2a+x)^{12}$, and find the sum of the terms if $a=1$, $x=-2$.

$$(2a)^{12}+12(2a)^{11}x+66(2a)^{10}x^2+220(2a)^9x^3+495(2a)^8x^4$$
$$+792(2a)^7x^5+924(2a)^6x^6+792(2a)^5x^7+495(2a)^4x^8$$
$$+220(2a)^3x^9+66(2a)^2x^{10}+12(2a)x^{11}+x^{12}.$$

Substitute 1 for a and -2 for x.

$$(2-2)^{12}=0.$$

19. $(\sqrt{a}+\sqrt{b})^5=(a^{\frac{1}{2}}+b^{\frac{1}{2}})^5$

$$=a^{\frac{5}{2}}+5a^2b^{\frac{1}{2}}+10a^{\frac{3}{2}}b+10ab^{\frac{3}{2}}+5a^{\frac{1}{2}}b^2+b^{\frac{5}{2}}$$
$$=a^2\sqrt{a}+5a^2\sqrt{b}+10ab\sqrt{a}+10ab\sqrt{b}+5b^2\sqrt{a}+b^2\sqrt{b}.$$

20. $(2a^2-\frac{1}{2}\sqrt{a})^6$

$$=(2a^2)^6-6(2a^2)^5(\tfrac{1}{2}\sqrt{a})+15(2a^2)^4(\tfrac{1}{2}\sqrt{a})^2-20(2a^2)^3(\tfrac{1}{2}\sqrt{a})^3$$
$$+15(2a^2)^2(\tfrac{1}{2}\sqrt{a})^4-6(2a^2)(\tfrac{1}{2}\sqrt{a})^5+(\tfrac{1}{2}\sqrt{a})^6$$
$$=64a^{12}-96a^{10}\sqrt{a}+60a^9-20a^7\sqrt{a}+3\tfrac{3}{4}a^6-\tfrac{3}{8}a^4\sqrt{a}+\frac{a^3}{64}.$$

21. $\left(\sqrt{ab}-\frac{c}{2\sqrt{b}}\right)^5$

$=(\sqrt{ab})^5-5(\sqrt{ab})^4\left(\frac{c}{2\sqrt{b}}\right)+10(\sqrt{ab})^3\left(\frac{c}{2\sqrt{b}}\right)^2$

$-10(\sqrt{ab})^2\left(\frac{c}{2\sqrt{b}}\right)^3+5(\sqrt{ab})\left(\frac{c}{2\sqrt{b}}\right)^4-\left(\frac{c}{2\sqrt{b}}\right)^5$

$=a^{\frac{5}{2}}b^{\frac{5}{2}}-\frac{5}{2}a^2b^2c+\frac{5}{4}a^{\frac{3}{2}}b^{\frac{1}{2}}c^2-\frac{5}{8}ab^{-\frac{1}{2}}c^3+\frac{5}{16}a^{\frac{1}{2}}b^{-\frac{3}{2}}c^4-\frac{1}{32}b^{-\frac{5}{2}}c^5.$

22. $\left(\frac{a}{b}\sqrt{\frac{c}{d}}-\sqrt{\frac{d^2}{c^3}}\right)^3$

$=\left(\frac{a}{b}\sqrt{\frac{c}{d}}\right)^3-3\left(\frac{a}{b}\sqrt{\frac{c}{d}}\right)^2\left(\sqrt{\frac{d^2}{c^3}}\right)+3\left(\frac{a}{b}\sqrt{\frac{c}{d}}\right)\left(\sqrt{\frac{d^2}{c^3}}\right)^2-\left(\sqrt{\frac{d^2}{c^3}}\right)^3$

$=\frac{a^3c}{b^3d}\sqrt{\frac{c}{d}}-\frac{3a^2}{b^2}+\frac{3ad^2}{bc^3}\sqrt{\frac{c}{d}}-\frac{d^3}{c^3}$

$=a^3b^{-3}c^{\frac{3}{2}}d^{-\frac{1}{2}}-3a^2b^{-2}+3ab^{-1}c^{-\frac{3}{2}}d^{\frac{1}{2}}-c^{-3}d^3.$

23. $\left(\sqrt{\frac{a}{bc}}-\frac{\sqrt{c}}{3ab}\right)^3$

$=\left(\frac{a^{\frac{1}{2}}}{(bc)^{\frac{1}{2}}}\right)^3-3\left(\frac{a^{\frac{1}{2}}}{(bc)^{\frac{1}{2}}}\right)^2\left(\frac{c^{\frac{1}{2}}}{3ab}\right)+3\left(\frac{a^{\frac{1}{2}}}{(bc)^{\frac{1}{2}}}\right)\left(\frac{c^{\frac{1}{2}}}{3ab}\right)^2-\left(\frac{c^{\frac{1}{2}}}{3ab}\right)^3$

$=\frac{a^{\frac{3}{2}}}{(bc)^{\frac{3}{2}}}-3\left(\frac{a}{bc}\times\frac{c^{\frac{1}{2}}}{3ab}\right)+3\left(\frac{a^{\frac{1}{2}}}{b^{\frac{1}{2}}c^{\frac{1}{2}}}\right)\left(\frac{c}{9a^2b^2}\right)-\frac{c^{\frac{3}{2}}}{27a^3b^3}$

$=\frac{a^{\frac{3}{2}}}{(bc)^{\frac{3}{2}}}-\frac{3ac^{\frac{1}{2}}}{3ab^2c}+\frac{3a^{\frac{1}{2}}c}{9a^2b^{\frac{1}{2}}c^{\frac{1}{2}}}-\frac{c^{\frac{3}{2}}}{27a^3b^3}$

$=\frac{a^{\frac{3}{2}}}{b^{\frac{3}{2}}c^{\frac{3}{2}}}-\frac{1}{b^2c^{\frac{1}{2}}}+\frac{c^{\frac{1}{2}}}{3a^{\frac{1}{2}}b^{\frac{5}{2}}}-\frac{c^{\frac{3}{2}}}{27a^3b^3}.$

24. $(\sqrt[3]{m^2}+\sqrt{x^3})^3=(m^{\frac{2}{3}}+x^{\frac{3}{2}})^3$

$=(m^{\frac{2}{3}})^3+3(m^{\frac{2}{3}})^2x^{\frac{3}{2}}+3m^{\frac{2}{3}}(x^{\frac{3}{2}})^2+(x^{\frac{3}{2}})^3$

$=m^2+3mx\sqrt[6]{m^2x^3}+3x^3\sqrt[3]{m^2}+x^4\sqrt{x}.$

25. $(2\sqrt[5]{x^4}-\frac{1}{2}y^2)^4$

$=(2x^{\frac{4}{5}})^4-4(2x^{\frac{4}{5}})^3\left(\frac{y^2}{2}\right)+6(2x^{\frac{4}{5}})^2\left(\frac{y^2}{2}\right)^2-4(2x^{\frac{4}{5}})\left(\frac{y^2}{2}\right)^3+\left(\frac{y^2}{2}\right)^4$

$=16x^3\sqrt[5]{x}-16x^2y^2\sqrt[5]{x^2}+6xy^4\sqrt[5]{x^3}-y^6\sqrt[5]{x^4}+\frac{y^8}{16}.$

26. $\left(\frac{a^2}{2c}-\frac{\sqrt{c}}{3}\right)^5$

$=\left(\frac{a^2}{2c}\right)^5-5\left(\frac{a^2}{2c}\right)^4\left(\frac{\sqrt{c}}{3}\right)+10\left(\frac{a^2}{2c}\right)^3\left(\frac{\sqrt{c}}{3}\right)^2-10\left(\frac{a^2}{2c}\right)^2\left(\frac{\sqrt{c}}{3}\right)^3$

$+5\left(\frac{a^2}{2c}\right)\left(\frac{\sqrt{c}}{3}\right)^4-\left(\frac{\sqrt{c}}{3}\right)^5$

$=\frac{a^{10}c^{-5}}{32}-\frac{5}{48}a^8c^{-\frac{7}{2}}+\frac{5}{36}a^6c^{-2}-\frac{5}{54}a^4c^{-\frac{1}{2}}+\frac{1}{162}a^2c-\frac{c^{\frac{5}{2}}}{243}$

27. $(a^{\frac{n}{2}}-a^{-\frac{n}{2}})^4$

$=(a^{\frac{n}{2}})^4-4(a^{\frac{n}{2}})^3(a^{-\frac{n}{2}})+6(a^{\frac{n}{2}})^2(a^{-\frac{n}{2}})^2-4(a^{\frac{n}{2}})(a^{-\frac{n}{2}})^3+(a^{-\frac{n}{2}})^4$

$=a^{2n}-4a^n+6-4a^{-n}+a^{-2n}.$

28. $\left(\frac{\sqrt{a}}{2\sqrt[3]{b^2}}-3\sqrt{b}\right)^3$

$=\left(\frac{\sqrt{a}}{2\sqrt[3]{b^2}}\right)^3-3\left(\frac{\sqrt{a}}{2\sqrt[3]{b^2}}\right)^2(3\sqrt{b})+3\left(\frac{\sqrt{a}}{2\sqrt[3]{b^2}}\right)(3\sqrt{b})^2-(3\sqrt{b})^3$

$=\frac{a^{\frac{3}{2}}}{8b^2}-\frac{9a}{4b^{\frac{2}{3}}}+\frac{27a^{\frac{1}{2}}b^{\frac{1}{3}}}{2}-27b^{\frac{3}{2}}.$

29. $(\sqrt{a}-2\sqrt{b})^5=(a^{\frac{1}{2}}-2b^{\frac{1}{2}})^5$

$=(a^{\frac{1}{2}})^5-5(a^{\frac{1}{2}})^4(2b^{\frac{1}{2}})+10(a^{\frac{1}{2}})^3(2b^{\frac{1}{2}})^2-10(a^{\frac{1}{2}})^2(2b^{\frac{1}{2}})^3$

$+5(a^{\frac{1}{2}})(2b^{\frac{1}{2}})^4-(2b^{\frac{1}{2}})^5$

$=a^2\sqrt{a}-10a^2\sqrt{b}+40ab\sqrt{a}-80ab\sqrt{b}+80b^2\sqrt{a}-32b^2\sqrt{b}.$

30. $\left(\frac{2x^2}{y}-\sqrt[3]{y^2}\right)^6=(2x^2y^{-1}-y^{\frac{2}{3}})^6$

$=(2x^2y^{-1})^6-6(2x^2y^{-1})^5(y^{\frac{2}{3}})+15(2x^2y^{-1})^4(y^{\frac{2}{3}})^2-20(2x^2y^{-1})^3(y^{\frac{2}{3}})^3$

$+15(2x^2y^{-1})^2(y^{\frac{2}{3}})^4-6(2x^2y^{-1})(y^{\frac{2}{3}})^5+(y^{\frac{2}{3}})^6$

$=64x^{12}y^{-6}-192x^{10}y^{-4}\sqrt[3]{y^{-1}}+240x^8y^{-2}\sqrt[3]{y^{-2}}-160x^6y^{-1}$

$+60x^4\sqrt[3]{y^2}-12x^2y^2\sqrt[3]{y}+y^4.$

31. $\left(a^2b - \frac{\sqrt{b}}{2a}\right)^4 = \left(a^2b - \frac{b^{\frac{1}{2}}}{2a}\right)^4$

$= (a^2b)^4 - 4(a^2b)^3\left(\frac{b^{\frac{1}{2}}}{2a}\right) + 6(a^2b)^2\left(\frac{b^{\frac{1}{2}}}{2a}\right)^2 - 4(a^2b)\left(\frac{b^{\frac{3}{2}}}{2a}\right)^3 + \left(\frac{b^{\frac{1}{2}}}{2a}\right)^4$

$= a^8b^4 - 2a^5b^{\frac{7}{2}} + \frac{3}{2}a^2b^3 - \frac{a^{-1}b^{\frac{5}{2}}}{2} + \frac{a^{-4}b^2}{16}$

32. $\left(\frac{2a}{b^2} - \frac{1}{3}b\sqrt{a}\right)^4$

$= \left(\frac{2a}{b^2}\right)^4 - 4\left(\frac{2a}{b^2}\right)^3\left(\frac{1}{3}b\sqrt{a}\right) + 6\left(\frac{2a}{b^2}\right)^2\left(\frac{1}{3}b\sqrt{a}\right)^2$

$- 4\left(\frac{2a}{b^2}\right)\left(\frac{1}{3}b\sqrt{a}\right)^3 + \left(\frac{1}{3}b\sqrt{a}\right)^4$

$= \frac{16a^4}{b^8} - \frac{32a^{\frac{7}{2}}}{3b^5} + \frac{8a^3}{3b^2} - \frac{8a^{\frac{5}{2}}}{27} + \frac{a^2b^4}{81}$

or $16a^4b^{-8} - \frac{32}{3}a^{\frac{7}{2}}b^{-5} + \frac{8}{3}a^3b^{-2} - \frac{8}{27}a^{\frac{5}{2}}b + \frac{a^2b^4}{81}$

33. $\left(\frac{a\sqrt{a}}{\sqrt[4]{b^5}} - \frac{\sqrt[4]{b}}{2a}\right)^3$

$= \left(\frac{a^{\frac{3}{2}}}{b^{\frac{5}{4}}} - \frac{b^{\frac{1}{4}}}{2a}\right)^3$

$= \left(\frac{a^{\frac{3}{2}}}{b^{\frac{5}{4}}}\right)^3 - 3\left(\frac{a^{\frac{3}{2}}}{b^{\frac{5}{4}}}\right)^2\left(\frac{b^{\frac{1}{4}}}{2a}\right) + 3\left(\frac{a^{\frac{3}{2}}}{b^{\frac{5}{4}}}\right)\left(\frac{b^{\frac{1}{4}}}{2a}\right)^2 - \left(\frac{b^{\frac{1}{4}}}{2a}\right)^3$

$= \frac{a^{\frac{9}{2}}}{b^{\frac{5}{4}}} - \frac{3a^2}{2b^{1\frac{1}{2}}} + \frac{3}{4a^{\frac{1}{2}}b^{\frac{1}{2}}} - \frac{b^{\frac{3}{4}}}{8a^3}$.

Exercise 115.

1. $(1+x)^{\frac{1}{2}}$ to four terms

$= 1 + \frac{1}{2}x + \frac{\frac{1}{2}(\frac{1}{2}-1)}{2}x^2 + \frac{\frac{1}{2}(\frac{1}{2}-1)(\frac{1}{2}-2)}{3}x^3$

$= 1 + \frac{x}{2} - \frac{x^2}{8} + \frac{x^3}{16} - \ldots\ldots$

2. $(1+x)^{\frac{2}{3}}$ to four terms

$= 1 - \frac{2}{3}x + \frac{\frac{2}{3}(\frac{2}{3}-1)}{2}x^2 - \frac{\frac{2}{3}(\frac{2}{3}-1)(\frac{2}{3}-2)}{1\times 2\times 3}x^3$

$= 1 + \frac{2}{3}x - \frac{1}{9}x^2 + \frac{4}{81}x^3 - \ldots\ldots$

3. $(a+x)^{\frac{3}{4}}$ to four terms

$$= a^{\frac{3}{4}} + \tfrac{3}{4}a^{\frac{3}{4}-1}x + \frac{\frac{3}{4}(\frac{3}{4}-1)}{2}a^{\frac{3}{4}-2}x^2 + \frac{\frac{3}{4}(\frac{3}{4}-1)(\frac{3}{4}-2)}{\lfloor 3}a^{\frac{3}{4}-3}x^3$$

$$= a^{\frac{3}{4}} + \frac{3x}{4a^{\frac{1}{4}}} - \frac{3x^2}{32a^{\frac{5}{4}}} + \frac{15x^3}{128a^{\frac{9}{4}}}$$

$$= a^{\frac{3}{4}}\left(1 + \frac{3x}{4a} - \frac{3x^2}{32a^2} + \frac{5x^3}{128a^3} - \cdots\right).$$

4. $(1-x)^{-4}$ to four terms.

By substituting 1 for a and $-x$ for x in the formula $(a+x)^m$

$$= a^m + na^{m-1}x + \frac{n(n-1)}{2}a^{n-2}x^2 + \frac{n(n-1)(n-2)(n-3)}{\lfloor 3}ax^3$$

$$= 1 + 4x + 10x^2 + 20x^3 + \cdots$$

5. $(a^2-x^2)^{\frac{5}{2}}$ to four terms

$$= (a^2)^{\frac{5}{2}} - \tfrac{5}{2}(a^2)^{\frac{5}{2}-1} + \frac{\frac{5}{2}(\frac{5}{2}-1)}{\lfloor 2}(a^2)^{\frac{5}{2}-2}x^2 - \frac{\frac{5}{2}(\frac{5}{2}-1)(\frac{5}{2}-2)}{\lfloor 3}(a^2)^{\frac{5}{2}-3}x^3$$

$$= a^5 - \frac{5a^3x^2}{2} + \frac{15ax^4}{8} - \frac{5x^6}{16a} + \cdots$$

6. $(x^2+xy)^{-\frac{3}{2}}$ to four terms

$$= (x^2)^{-\frac{3}{2}} - \tfrac{3}{2}(x^2)^{-\frac{3}{2}-1}(xy) + \frac{-\frac{3}{2}(-\frac{3}{2}-1)}{2}(x^2)^{-\frac{3}{2}-2}(xy)^2$$

$$+ \frac{-\frac{3}{2}(-\frac{3}{2}-1)(-\frac{3}{2}-2)}{\lfloor 3}x^{2-\frac{3}{2}-3}(xy)^3 \cdots$$

$$= x^{-3} - \tfrac{3}{2}x^{-4}y + \frac{15x^{-5}y^2}{8} - \frac{35x^{-6}y^3}{16} + \cdots$$

7. $(2x-3y)^{-\frac{1}{4}}$ to four terms

$$= (2x)^{-\frac{1}{4}} - (-\tfrac{1}{4})(2x)^{-\frac{5}{4}}(3y) + \frac{(-\frac{1}{4})(-\frac{5}{4})}{2}(2x)^{-\frac{9}{4}}(3y)^2$$

$$- \frac{(-\frac{1}{4})(-\frac{5}{4})(-\frac{9}{4})}{2\times 3}(2x)^{-\frac{13}{4}}(3y)^3$$

$$= 2x^{-\frac{1}{4}}\{1 + \tfrac{3}{8}x^{-1}y + \tfrac{45}{128}x^{-2}y^2 + \tfrac{405}{1024}x^{-3}y^3 + \cdots\}$$

8. $\sqrt[5]{1-5x}$ to four terms

$= (1-5x)^{\frac{1}{5}}$

$= 1 - \frac{1}{5}(5x) + \frac{\frac{1}{5}(\frac{1}{5}-1)}{1\times 2}(5x)^2 - \frac{\frac{1}{5}(\frac{1}{5}-1)(\frac{1}{5}-2)}{1\times 2\times 3}(5x)^3$

$= 1 - x - 2x^2 - 6x^3 - \cdots$

9. $\frac{1}{\sqrt{(4a^2-3ax)^3}}$ to four terms

$(4a^2 - 3ax)^{-\frac{3}{2}}$

$= (4a^2)^{-\frac{3}{2}} - (-\frac{3}{2})(4a^2)^{-\frac{5}{2}}(3ax) + \frac{(-\frac{3}{2})(-\frac{5}{2})(4a^2)^{-\frac{7}{2}}(3ax)^2}{1\times 2}$

$- \frac{(-\frac{3}{2})(-\frac{5}{2})(-\frac{7}{2})}{1\times 2\times 3}(4a^2)^{-\frac{9}{2}}(3ax)^3$

$= \frac{1}{8}a^{-3} + \frac{9}{64}a^{-4}x + \frac{135}{1024}a^{-5}x^2 + \frac{945}{8192}a^{-6}x^3$

$= \frac{1}{8a^3}\left\{1 + \frac{9x}{8a} + \frac{135x^2}{128a^2} + \frac{945x^3}{1024a^3} + \cdots\right\}.$

10. $\sqrt[6]{\frac{1}{(1-3y)^5}}$ to four terms

$= (1-3y)^{-\frac{5}{6}}$

$= 1 - (-\frac{5}{6})(3y) + \frac{(-\frac{5}{6})(-\frac{11}{6})}{1\times 2}(3y)^2 - \frac{(-\frac{5}{6})(-\frac{11}{6})(-\frac{17}{6})}{1\times 2\times 3}(3y)^3$

$= 1 + \frac{5y}{2} + \frac{55y^2}{8} + \frac{935y^3}{48} + \cdots$

11. $(1+x+x^2)^{\frac{2}{3}}$ to four terms

$= [1 + (x+x^2)]^{\frac{2}{3}}$

$= 1 + \frac{2}{3}(x+x^2) + \frac{\frac{2}{3}(\frac{2}{3}-1)}{2}(x+x^2)^2 + \frac{\frac{2}{3}(\frac{2}{3}-1)(\frac{2}{3}-2)}{3}(x+x^2)$

$= 1 + \frac{2}{3}x + \frac{2}{9}x^2 - \frac{14}{81}x^3 + \cdots$

12. $(1-x+x^2)^{\frac{3}{2}}$ to four terms

$= [1 - (x-x^2)]^{\frac{3}{2}}$

$= 1 - \frac{3}{2}(x-x^2) + \frac{\frac{3}{2}(\frac{3}{2}-1)}{1\times 2}(x-x^2)^2 - \frac{\frac{3}{2}(\frac{3}{2}-1)(\frac{3}{2}-2)}{1\times 2\times 3}(x-x^2)^3$

$= 1 - \frac{3}{2}x + \frac{3}{2}x^2 + (\frac{3}{2}x^2 - \frac{3}{2}x^3) - (-\frac{1}{16}x^3)$

$= 1 - \frac{3}{2}x + \frac{15}{8}x^2 - \frac{11}{16}x^3 + \cdots$

13. The *rth* term of $(a+x)^{\frac{1}{2}}$

$$= \frac{\frac{1}{2}(\frac{1}{2}-1)\ldots\ldots(\frac{1}{2}-r+2)}{1\times 2\ldots\ldots(r-1)} a^{\frac{1}{2}-r+1}x^{r-1}$$

$$= \frac{\left(\frac{1}{2}\right)\left(-\frac{1}{2}\right)\left(-\frac{3}{2}\right)\left(-\frac{5}{2}\right)\ldots\ldots\left(\frac{5-2r}{2}\right)}{\lfloor r-1} a^{\frac{3-2r}{2}}x^{r-1}$$

$$= (-1)^r \frac{\left(\frac{1}{2}\right)\left(\frac{1}{2}\right)\left(\frac{3}{2}\right)\left(\frac{5}{2}\right)\ldots\ldots\left(\frac{2r-5}{2}\right)}{\lfloor r-1} a^{\frac{3-2r}{2}}x^{r-1}.$$

Multiply both terms by 2^{r-1}

$$= (-1)^r \frac{1\times 3\times 5\ldots\ldots(2r-5)}{\lfloor r-1\times 2^{r-1}} a^{\frac{3}{2}-2r}x^{r-1}$$

14. The *rth* term of $(a-x)^{-3}$

$$= \frac{(-3)(-4)\ldots\ldots(-r-1)}{1\times 2\times 3\ldots\ldots r-1} a^{-r-2}x^{r-1}$$

$$= \frac{3\times 4\ldots\ldots(r-1)(r)(r+1)}{1\times 2\times 3\times 4\ldots\ldots(r-1)} a^{-r-2}x^{r-1}$$

$$= \frac{r(r+1)}{1\times 2} a^{-r-2}x^{r-1}.$$

15. $\sqrt{65}$ to five decimal places

$$= \{64(1+\tfrac{1}{64})\}^{\frac{1}{2}}$$
$$= 8(1+\tfrac{1}{64})^{\frac{1}{2}}$$
$$= 8\{1+(\tfrac{1}{2})(\tfrac{1}{64})+\frac{\frac{1}{2}(\frac{1}{2}-2)}{1\times 2}(\tfrac{1}{64})^2\}$$
$$= 8(1+\tfrac{1}{128}-\tfrac{1}{32768})$$
$$= 8(1+0.00781-0.00003)$$
$$= 8.06224\ldots\ldots$$

16. $\sqrt[3]{1\frac{1}{30}}$ to five decimal places

$$= \sqrt[3]{\tfrac{31}{30}}$$
$$= \{1(1+\tfrac{1}{30})^{\frac{1}{3}}\}$$
$$= 1+\tfrac{1}{3}\times\tfrac{1}{30}+\frac{\frac{1}{3}(\frac{1}{3}-1)}{1\times 2}(\tfrac{1}{30})^2$$
$$= 1+0.01111-0.00012$$
$$= 1.01099.$$

17. $\sqrt[7]{129}$ **to six decimal places**

$$\therefore \{128(1+\tfrac{1}{128})\}^{\frac{1}{7}}$$
$$= \{2^7(1+\tfrac{1}{128})\}^{\frac{1}{7}}$$
$$\therefore \sqrt[7]{129} = 2(1+\tfrac{1}{128})^{\frac{1}{7}}$$
$$= 2\{1 + \tfrac{1}{7}\times\tfrac{1}{128} + \frac{\frac{1}{7}(\frac{1}{7}-1)}{2}(\tfrac{1}{128})^2\} + \cdots$$
$$= 2(1 + 0.001116 - 0.000004)$$
$$= 2.002224.$$

18. $(1-2x+3x^2)^{-\frac{2}{3}}$ **to four terms**

$$\{1-(2x-3x^2)\}^{-\frac{2}{3}}$$
$$= 1-(-\tfrac{2}{3})(2x-3x^2) + \frac{(-\frac{2}{3})(-\frac{5}{3})}{1\times 2}(2x-3x^2)^2$$
$$- \frac{(-\frac{2}{3})(-\frac{5}{3})(-\frac{11}{3})}{1\times 2\times 3}(2x-3x^2)^3$$
$$= 1 + \left(\frac{4x}{5} - \frac{6x^2}{5}\right) + \left(\frac{28x^2}{25} - \frac{84x^3}{25} + \frac{63x^4}{25}\right) + \left(\frac{224x^3}{125} - \cdots\right)$$
$$= 1 + \frac{4x}{5} - \frac{2x^2}{25} - \frac{196x^3}{125} - \cdots$$

19. $\dfrac{(1+2x)^2}{(1+3x)^3}$ **to coefficient of** x^4

$$= (1+2x)^2(1+3x)^{-3}$$
$$= (1+4x+4x^2)(1-9x+54x^2-270x^3+1215x^4).$$

The terms containing x^4 will be
$$1215x^4 - 4x(270x^3) + 4x^2(54x^2)$$
$$= 351x^4.$$

20. $(1+x)^{\frac{1}{2}}$ **expanded**

$$1 + \tfrac{1}{2}x + \frac{\frac{1}{2}(\frac{1}{2}-1)}{2}x^2 + \frac{\frac{1}{2}(\frac{1}{2}-1)(\frac{1}{2}-2)}{\lfloor 3}x^3$$
$$+ \frac{\frac{1}{2}(\frac{1}{2}-1)(\frac{1}{2}-2)(\frac{1}{2}-3)}{\lfloor 4}x^4 \cdots$$
$$= 1 + \tfrac{1}{2}x - \frac{1}{2\times 2^2}x^2 + \frac{1\times 3}{2\times 3\times 2^3}x^3 - \frac{1\times 3\times 5}{2\times 3\times 4\times 2^4}x^4 \cdots$$

When $x = 1$, this becomes $(1+1)^{\frac{1}{2}}$
$$= 1 + \frac{1}{2} - \frac{1}{2\times 2^2} + \frac{1\times 3}{2\times 3\times 2^3} - \frac{1\times 3\times 5}{2\times 3\times 4\times 2^4} + \cdots$$

EXERCISE 116.

1. $\log 35 = \log(7 \times 5)$
$= \log 7 + \log 5.$
$\log 7 = 0.8451$
$\log 5 = 0.6990$
$\therefore \log 35 = 1.5441$

2. $\log 9 = \log(3 \times 3)$
$= \log 3 + \log 3.$
$\log 3 = 0.4771$
$\log 3 = 0.4771$
$\therefore \log 9 = 0.9542$

3. $\log 8 = \log(2 \times 2 \times 2)$
$= \log 2 + \log 2 + \log 2.$
$\log 2 = 0.3010$
$\log 2 = 0.3010$
$\log 2 = 0.3010$
$\therefore \log 8 = 0.9030$

4. $\log 49 = \log(7 \times 7)$
$= \log 7 + \log 7.$
$\log 7 = 0.8451$
$\log 7 = 0.8451$
$\therefore \log 49 = 1.6902$

5. $\log 12 = \log(2 \times 2 \times 3)$
$= \log 2 + \log 2 + \log 3.$
$\log 2 = 0.3010$
$\log 2 = 0.3010$
$\log 3 = 0.4771$
$\therefore \log 12 = 1.0791$

6. $\log 60 = \log(2 \times 3 \times 2 \times 5)$
$= \log 2^2 + \log 3 + \log 5.$
$\log 2 = 0.3010$
$\log 2 = 0.3010$
$\log 3 = 0.4771$
$\log 5 = 0.6990$
$\therefore \log 60 = 1.7781$

7. $\log 75 = \log(5 \times 5 \times 3)$
$= \log 5 + \log 5 + \log 3.$
$\log 5 = 0.6990$
$\log 5 = 0.6990$
$\log 3 = 0.4771$
$\therefore \log 75 = 1.8751$

8. $\log 7.5 = \log(3 \times 5 \times 5 \times 0.1)$
$= \log 3 + \log 5$
$+ \log 5 + \log 0.1.$
$\log 3 = 0.4771$
$\log 5 = 0.6990$
$\log 5 = 0.6990$
$\log 0.1 = 9.0000 - 10$
$\therefore \log 7.5 = 0.8751$

9. $\log 0.05 = \log(5 \times 0.01)$
$= \log 5 + \log 0.01.$
$\log 5 = 0.6990$
$\log 0.01 = 8.0000 - 10$
$\therefore \log 0.05 = 8.6990 - 10$

10. $\log 12.5 = \log(5^3 \times 0.1)$
$= \log 5 + \log 5 + \log 5$
$+ \log 0.1.$
$\log 5 = 0.6990$
$\log 5 = 0.6990$
$\log 5 = 0.6990$
$\log 0.1 = 9.0000 - 10$
$\therefore \log 12.5 = 1.0970$

11. $\log 1.25 = \log(5^3 \times 0.01)$
$= \log 5 + \log 5 + \log 5$
$+ \log 0.01.$
$\log 5 = 0.6990$
$\log 5 = 0.6990$
$\log 5 = 0.6990$
$\log 0.01 = 8.0000 - 10$
$\therefore \log 1.25 = 0.0970$

12. $\log 37.5 = \log(5^3 \times 3 \times 0.1)$
$= \log 5 + \log 5 + \log 5$
$+ \log 3 + \log 0.1.$
$\log 5 = 0.6990$
$\log 5 = 0.6990$
$\log 5 = 0.6990$
$\log 3 = 0.4771$
$\log 0.1 = 9.0000 - 10$
$\therefore \log 37.5 = 1.5741$

13. $\log 1.75 = \log(5\times5\times7\times0.01)$
$= \log 5 + \log 5 + \log 7 + \log 0.01.$

$\log 5 = 0.6990$
$\log 5 = 0.6990$
$\log 7 = 0.8451$
$\log 0.01 = 8.0000 - 10$
$\log 1.75 = 0.2431$

14. $\log 105 = \log(5\times3\times7)$
$= \log 5 + \log 3 + \log 7.$

$\log 5 = 0.6990$
$\log 3 = 0.4771$
$\log 7 = 0.8451$
$\log 105 = 2.0212$

15. $\log 0.0105 = \log(3\times7\times5\times0.0001)$
$= \log 3 + \log 7 + \log 5 + \log 0.0001.$

$\log 3 = 0.4771$
$\log 7 = 0.8451$
$\log 5 = 0.6990$
$\log 0.0001 = 6.0000 - 10$
$\therefore \log 0.0105 = 8.0212 - 10$

16. $\log 1.05 = \log(7\times3\times5\times0.01)$
$= \log 7 + \log 3 + \log 5 + \log 0.01.$

$\log 7 = 0.8451$
$\log 3 = 0.4771$
$\log 5 = 0.6990$
$\log 0.01 = 8.0000 - 10$
$\therefore \log 1.05 = 0.0212$

17. $\log 7^4 = 4\times\log 7$
$= 4\times0.8451$
$= 3.3804.$

18. $\log 3^8 = 8\times\log 3$
$= 8\times0.4771$
$= 3.8168.$

19. $\log 7^3 = 3\times\log 7$
$= 3\times0.8451$
$= 2.5353.$

20. $\log 5^{\frac{1}{2}} = \frac{1}{2}$ of $\log 5$
$= \frac{1}{2}$ of 0.6990
$= 0.3495.$

21. $\log 3^{\frac{1}{8}} = \frac{1}{8}$ of $\log 3$
$= \frac{1}{8}$ of 0.4771
$= 0.0596$

22. $\log 7^{\frac{1}{5}} = \frac{1}{5}$ of $\log 7$
$= \frac{1}{5}$ of 0.8451
$= 0.1690$

23. $\log 2^{\frac{3}{4}} = \frac{3}{4}$ of $\log 2$
$= \frac{3}{4}$ of 0.3010
$= 0.2258.$

24. $\log 5^{\frac{3}{5}} = \frac{3}{5}$ of $\log 5$
$= \frac{3}{5}$ of 0.6990
$= 0.4660.$

25. $\log 3^{\frac{3}{7}} = \frac{3}{7}$ of $\log 3$
$= \frac{3}{7}$ of 0.4771
$= 0.2045.$

26. $\log 3^{\frac{9}{11}} = \frac{9}{11}$ of $\log 3$
$= \frac{9}{11}$ of 0.4771
$= 0.3904.$

27. $\log 7^{\frac{7}{2}} = \frac{7}{2}$ of $\log 7$
$= \frac{7}{2}$ of 0.8451
$= 2.9579.$

28. $\log 3^{\frac{4}{3}} = \frac{4}{3}$ of $\log 3$
$= \frac{4}{3}$ of 0.4771
$= 0.6361.$

29. $\log 5^{\frac{3}{4}} = \frac{3}{4}$ of $\log 5$
$= \frac{3}{4}$ of 0.6990
$= 0.5243.$

30. $\log 7^{\frac{11}{7}} = \frac{11}{7}$ of $\log 7$
$= \frac{11}{7}$ of 0.8451
$= 1.3280.$

31. $\log 21^{\frac{7}{8}} = \frac{7}{8}$ of $\log(7\times3)$.
$\log 7 = 0.8451$
$\log 3 = 0.4771$
$\log 21 = 1.3222$
$\frac{7}{8}$ of $1.3222 = 1.1569.$

EXERCISE 117.

1. $\log \frac{2}{5} = \log 2 + \operatorname{colog} 5.$
$\log 2 = 0.3010$
$\operatorname{colog} 5 = 9.3010 - 10$
$\therefore \log \frac{2}{5} = 9.6020 - 10$

2. $\log \frac{2}{7} = \log 2 + \operatorname{colog} 7.$
$\log 2 = 0.3010$
$\operatorname{colog} 7 = 9.1549 - 10$
$\therefore \log \frac{2}{7} = 9.4559 - 10$

3. $\log \frac{3}{5} = \log 3 + \operatorname{colog} 5.$
$\log 3 = 0.4771$
$\operatorname{colog} 5 = 9.3010 - 10$
$\therefore \log \frac{3}{5} = 9.7781 - 10$

4. $\log \frac{3}{7} = \log 3 + \operatorname{colog} 7.$
$\log 3 = 0.4771$
$\operatorname{colog} 7 = 9.1549 - 10$
$\therefore \log \frac{3}{7} = 9.6320 - 10$

5. $\log \frac{5}{7} = \log 5 + \operatorname{colog} 7.$
$\log 5 = 0.6990$
$\operatorname{colog} 7 = 9.1549 - 10$
$\therefore \log \frac{5}{7} = 9.8539 - 10$

6. $\log \frac{7}{5} = \log 7 + \operatorname{colog} 5.$
$\log 7 = 0.8451$
$\operatorname{colog} 5 = 9.3010 - 10$
$\therefore \log \frac{7}{5} = 0.1461$

7. $\log \frac{5}{3} = \log 5 + \operatorname{colog} 3.$
$\log 5 = 0.6990$
$\operatorname{colog} 3 = 9.5229 - 10$
$\therefore \log \frac{5}{3} = 0.2219$

8. $\log \frac{5}{2} = \log 5 + \operatorname{colog} 2.$
$\log 5 = 0.6990$
$\operatorname{colog} 2 = 9.6990 - 10$
$\therefore \log \frac{5}{2} = 0.3980$

9. $\log \frac{7}{3} = \log 7 + \operatorname{colog} 3.$
$\log 7 = 0.8451$
$\operatorname{colog} 3 = 9.5229 - 10$
$\therefore \log \frac{7}{3} = 0.3680$

10. $\log \frac{7}{2} = \log 7 + \operatorname{colog} 2.$
$\log 7 = 0.8451$
$\operatorname{colog} 2 = 9.6990 - 10$
$\therefore \log \frac{7}{2} = 0.5441$

11. $\log \frac{3}{2} = \log 3 + \operatorname{colog} 2.$
$\log 3 = 0.4771$
$\operatorname{colog} 2 = 9.6990 - 10$
$\therefore \log \frac{3}{2} = 0.1761$

12. $\log \frac{7}{0.5} = \log 7 + \operatorname{colog} 5.$
$\log 7 = 0.8451$
$\operatorname{colog} 5 = 0.3010$
$\therefore \log \frac{7}{0.5} = 1.1461$

13. $\log \frac{0.05}{3} = \log 0.05 + \operatorname{colog} 3.$
$\log 0.05 = 8.6990 - 10$
$\operatorname{colog} 3 = 9.5229 - 10$
$\therefore \log \frac{0.05}{3} = 8.2219 - 10$

14. $\log\frac{0.005}{2} = \log 0.005 + \operatorname{colog} 2.$

$\log 0.005 = 7.6990 - 10$
$\operatorname{colog} \quad 2 = 9.6990 - 10$
$\therefore \log\frac{0.005}{2} = 7.3980 - 10$

15. $\log\frac{0.07}{5} = \log 0.07 + \operatorname{colog} 5.$

$\log \ 0.07 = 8.8451 - 10$
$\operatorname{colog} \quad 5 = 9.3010 - 10$
$\therefore \log\frac{0.07}{5} = 8.1461 - 10$

16. $\log\frac{5}{0.07} = \log 5 + \operatorname{colog} 0.07.$

$\log \quad 5 = 0.6990$
$\operatorname{colog} \ 0.07 = 1.1549$
$\therefore \log\frac{5}{0.07} = 1.8539$

17. $\log\frac{3}{0.007} = \log 3 + \operatorname{colog} 0.007.$

$\log \quad 3 = 0.4771$
$\operatorname{colog} 0.007 = 2.1549$
$\therefore \log\frac{3}{0.007} = 2.6320$

18. $\log\frac{0.003}{7} = \log 0.003 + \operatorname{colog} 7.$

$\log 0.003 = 7.4771 - 10$
$\operatorname{colog} \quad 7 = 9.1549 - 10$
$\therefore \log\frac{0.003}{7} = 6.6320 - 10$

19. $\log\frac{0.05}{0.003} = \log 0.05 + \operatorname{colog} 0.003.$

$\log \ 0.05 = 8.6990 - 10$
$\operatorname{colog} 0.003 = 2.5229$
$\therefore \log\frac{0.05}{0.003} = 1.2219$

20. $\log\frac{0.007}{0.02} = \log 0.007 + \operatorname{colog} 0.02.$

$\log \ 0.007 = 7.8451 - 10$
$\operatorname{colog} \ 0.02 = 1.6990$
$\therefore \log\frac{0.007}{0.02} = 9.5441 - 10$

21. $\log\frac{0.02}{0.007} = \log 0.02 + \operatorname{colog} 0.007.$

$\log \ 0.02 = 8.3010 - 10$
$\operatorname{colog} 0.007 = 2.1549$
$\therefore \log\frac{0.02}{0.007} = 0.4559$

22. $\log\frac{0.005}{0.07} = \log 0.005 + \operatorname{colog} 0.07.$

$\log \ 0.005 = 7.6990 - 10$
$\operatorname{colog} \ 0.07 = 1.1549$
$\therefore \log\frac{0.005}{0.07} = 8.8539 - 10$

23. $\log\frac{0.03}{7} = \log 0.03 + \operatorname{colog} 7.$

$\log \ 0.03 = 8.4771 - 10$
$\operatorname{colog} \quad 7 = 9.1549 - 10$
$\therefore \log\frac{0.03}{7} = 7.6320 - 10$

24. $\log\frac{0.0007}{0.2} = \log 0.0007 + \operatorname{colog} 0.2.$

$\log 0.0007 = 6.8451 - 10$
$\operatorname{colog} \ 0.2 = 0.6990$
$\therefore \log\frac{0.0007}{0.2} = 7.5441 - 10$

25. $\log\frac{0.02^2}{3^3} = \log 0.02^2 + \operatorname{colog} 3^3.$

$\log \ 0.02^2 = 6.6020 - 10$
$\operatorname{colog} \quad 3^3 = 8.5687 - 10$
$\therefore \log\frac{0.02^2}{3^3} = 5.1707 - 10$

26. $\log \frac{3^3}{0.02^2} = \log 3^3 + \operatorname{colog} 0.02^2.$

$$\begin{aligned} \log \quad 3^3 &= 1.4313 \\ \operatorname{colog} \; 0.02^2 &= 3.3980 \\ \therefore \log \frac{3^3}{0.02^2} &= \overline{4.8293} \end{aligned}$$

27. $\log \frac{7^3}{0.02^2} = \log 7^3 + \operatorname{colog} 0.02^2.$

$$\begin{aligned} \log \quad 7^3 &= 2.5353 \\ \operatorname{colog} \; 0.02^2 &= 3.3980 \\ \therefore \log \frac{7^3}{0.02^2} &= \overline{5.9333} \end{aligned}$$

28. $\log \frac{0.07^3}{0.003^3} = \log 0.07^3 \times \operatorname{colog} 0.003^3.$

$$\begin{aligned} \log \; 0.07^3 &= 6.5353 - 10 \\ \operatorname{colog} 0.003^3 &= 7.5687 \\ \therefore \log \frac{0.07^3}{0.003^3} &= 4.1040 \end{aligned}$$

29. $\log \frac{0.005^2}{7^3} = \log 0.005^2 + \operatorname{colog} 7^3.$

$$\begin{aligned} \log 0.005^2 &= 5.3980 - 10 \\ \operatorname{colog} \quad 7^3 &= 7.4647 - 10 \\ \therefore \log \frac{0.005^2}{7^3} &= 2.8627 - 10 \end{aligned}$$

30. $\log \frac{7^3}{0.005^2} = \log 7^3 + \operatorname{colog} 0.005^2.$

$$\begin{aligned} \log \quad 7^3 &= 2.5353 \\ \operatorname{colog} 0.005^2 &= 4.6020 \\ \therefore \log \frac{7^3}{0.005^2} &= \overline{7.1373} \end{aligned}$$

Exercise 118.

1. $\log 999 = 2.9996$.

2. $\log 9901 = 3.9956 + \frac{1}{10}$ of $0.0005 = 3.9957$.

3. $\log 5406 = 3.7324 + \frac{6}{10}$ of $0.0008 = 3.7329$.

4. $\log 90801 = 4.9581 + \frac{1}{100}$ of $0.0005 = 4.9581$.

5. $\log 10001 = 4.0000 + \frac{1}{100}$ of $0.0043 = 4.0000$.

6. $\log 10010 = 4.0000 + \frac{10}{100}$ of $0.0043 = 4.0004$.

7. $\log 0.00987 = 7.9943 - 10$.

8. $\log 0.87701 = 9.9430 - 10$.

9. $\log 1.0001 = 0.0000 + \frac{1}{100}$ of $0.0043 = 0.0000$.

10. $\log 7.0699 = 0.8488 + \frac{99}{100}$ of $0.0006 = 0.8494$.

11. $\log 0.0897 = 8.9528 - 10$.

12. $\log 99.778 = 1.9987 + \frac{78}{100}$ of $0.0004 = 1.9990$.

13. Antilogarithm of 2.5310.
Number corresponding to 0.5310 is $3390 + \frac{8}{13}$ of $10 = 3396$.
$\therefore$ number required is 339.6.

14. Antilogarithm of 1.9484.
Number corresponding to 0.9484 is 8880.
$\therefore$ number required is 88.8.

15. Antilogarithm of $9.8800 - 10$.
Number corresponding to 0.8800 is $7580 + \frac{3}{5}$ of $10 = 7586$.
$\therefore$ number required is 0.7586.

16. Antilogarithm of 0.2787.
Number corresponding to 2787 is $1890 + \frac{22}{23}$ of $10 = 1900$.
$\therefore$ number required is 1.9.

17. Antilogarithm of $7.0216 - 10$.
Number corresponding to 0.0216 is $1050 + \frac{4}{41}$ of $10 = 1051$.
$\therefore$ number required is 0.001051.

18. Antilogarithm of $8.6580 - 10$.
Number corresponding to 0.6580 is 4550.
$\therefore$ number required is 0.0455.

EXERCISE 119.

1.

$948.76 \times 0.043875.$

$\log \quad 948.76 = 2.9772$
$\log \quad 0.043875 = 8.6423 - 10$
1.6195
$= \log 41.64.$

2.

$3.4097 \times 0.0087634.$

$\log \quad 3.4097 = 0.5328$
$\log 0.0087634 = 7.9427 - 10$
$8.4755 - 10$
$= \log 0.02989.$

3.

$830.75 \times 0.0003769.$

$\log \quad 830.75 = 2.9195$
$\log 0.0003769 = 6.5762 - 10$
$9.4957 - 10$
$= \log 0.3131.$

4.

$8.4395 \times 0.98274.$

$\log \quad 8.4395 = 0.9263$
$\log \quad 0.98271 = 9.9925 - 10$
0.9188
$= \log 8.294.$

5.

$7564 \times (-0.003764).$

$\log \quad 7564 = 3.8787$
$\log(-0.003764) = 7.5756^n - 10$
1.4543^n
$= \log -28.47.$

6.

$3.7648 \times (-0.083497).$

$\log \quad 3.7648 = 0.5757$
$\log(-0.083497) = 8.9217^n - 10$
$9.4974^n - 10$
$= \log -0.3144.$

7.

$-5.840359 \times (-0.00178).$

$\log(-5.840359) = 0.7661^n$
$\log \quad (-0.00178) = 7.2501^n - 10$
$8.0168 - 10$
$= \log 0.0104.$

8.

$-8945.07 \times 73.846.$

$\log \quad (-8945.07) = 3.9515^n$
$\log \quad 73.846 = 1.8683$
5.8198^n
$= \log -660600.$

9.

$$\frac{70654}{54013} = \log 70654 + \operatorname{colog} 54013.$$

$$\log \quad 70654 = 4.8491$$
$$\operatorname{colog} 54013 = \underline{5.2675 - 10}$$
$$0.1166$$
$$= \log 1.308.$$

10.

$$\frac{58706}{93078} = \log 58706 + \operatorname{colog} 93078.$$

$$\log \quad 58706 = 4.7686$$
$$\operatorname{colog} 93078 = \underline{5.0312 - 10}$$
$$9.7998 - 10$$
$$= \log 0.6307.$$

11.

$$\frac{8.32165}{0.07891} = \log 8.32165 + \operatorname{colog} 0.07891.$$

$$\log \quad 8.32165 = 0.9202$$
$$\operatorname{colog} 0.07891 = \underline{1.1028}$$
$$2.0230$$
$$= \log 105.4.$$

12.

$$\frac{65039}{90761} = \log 65039 + \operatorname{colog} 90761.$$

$$\log \quad 65039 = 4.8132$$
$$\operatorname{colog} \quad 90761 = \underline{5.0421 - 10}$$
$$9.8553 - 10$$
$$= \log 0.7167.$$

13.

$$\frac{7.652}{-0.06875} = \log 7.652 + \operatorname{colog}(-0.06875).$$

$$\log \quad 7.652 = 0.8838$$
$$\operatorname{colog}(-0.06875) = \underline{11.1627^n - 10}$$
$$2.0465^n$$
$$= \log - 111.3.$$

14.

$$\frac{0.07654}{83.947 \times 0.8395} = \log 0.07654 + \operatorname{colog} 83.947 + \operatorname{colog} 0.8395.$$

$$\log \quad 0.07654 = 8.8839 - 10$$
$$\operatorname{colog} \quad 83.947 = 8.0760 - 10$$
$$\operatorname{colog} \quad 0.8395 = \underline{0.0759}$$
$$7.0358 - 10$$
$$= \log 0.001086.$$

15.

$$\frac{7564 \times 0.07643}{8093 \times 0.09817}$$

$$\log \quad 7564 = 3.8787$$
$$\log \quad 0.07643 = 6.8832 - 10$$
$$\operatorname{colog} \quad 8093 = 6.0919 - 10$$
$$\operatorname{colog} 0.09817 = \underline{1.0080}$$
$$9.8618 - 10$$
$$= \log 0.7277.$$

16.

$$\frac{89 \times 753 \times 0.0097}{36709 \times 0.08497}$$

$$\log \quad 89 = 1.9494$$
$$\log \quad 753 = 2.8768$$
$$\log \quad 0.0097 = 7.4352 - 10$$
$$\operatorname{colog} \quad 36709 = 5.4352 - 10$$
$$\operatorname{colog} 0.08497 = \underline{1.0708}$$
$$9.3190 - 10$$
$$= \log 0.2084.$$

17.

$$\frac{413 \times 8.17 \times 3182}{915 \times 728 \times 2.315}.$$

$\log 413 = 2.6160$
$\log 8.17 = 0.9122$
$\log 3182 = 3.5027$
$\operatorname{colog} 915 = 7.0386 - 10$
$\operatorname{colog} 728 = 7.1379 - 10$
$\operatorname{colog} 2.315 = 9.6354 - 10$

0.8428
$= \log 6.963.$

18.

$$\frac{212 \times (-6.12) \times (-2008)}{365 \times (-531) \times 2.576}$$

$\log 212 = 2.3263$
$\log (-6.12) = 0.7868^n$
$\log (-2008) = 3.3028^n$
$\operatorname{colog} 365 = 7.4377 - 10$
$\operatorname{colog} (-531) = 7.2749^n - 10$
$\operatorname{colog} 2.576 = 9.5891 - 10$

0.7176^n
$= \log - 5.219.$

19.

$\log 6.05 = 0.7818$
$\log 6.05^3 = 2.3454$
$= \log 221.5.$

20.

$\log 1.051 = 0.0216$
$\log 1.051^7 = 0.1512$
$= \log 1.416.$

21.

$\log 1.1768 = 0.0707$
$\log 1.1768^5 = 0.3535$
$= \log 2.257.$

22.

$\log 1.3178 = 0.1198$
$\log 1.3178^{10} = 1.1980$
$= \log 15.78.$

23.

$\log 0.78765 = 9.8963 - 10$
$\log 0.78765^6 = 9.3778 - 10$
$= \log 0.2387.$

24.

$\log 0.691 = 9.8395 - 10$
$\log 0.691^9 = 8.5555 - 10$
$= \log 0.03593.$

25.

$\log (\frac{73}{61})^{11} = 11 (\log 73 + \operatorname{colog} 61)$
$= 11 (1.8633 + 8.2147 - 10)$
$= 0.8580$
$= \log 7.212.$

26.

$\log (\frac{14}{51})^7 = 7 (\log 14 + \operatorname{colog} 51)$
$= 7 (1.1461 + 8.2924 - 10)$
$= 6.0695 - 10$
$= \log 0.0001174.$

27.

$(10\frac{2}{3})^4 = (\frac{32}{3})^4.$
$\log (\frac{32}{3})^4 = 4 (\log 32 + \operatorname{colog} 3)$
$= 4 (1.5051 + 9.5229 - 10)$
$= 4.1120$
$= \log 12940.$

28.

$(17\frac{1}{9})^8 = (\frac{154}{9})^8.$
$\log (\frac{154}{9})^8 = 8 (\log 16 + \operatorname{colog} 9)$
$= 8 (1.2041 + 9.0458 - 10)$
$= 1.9992$
$= \log 99.82$

29. $\log(\frac{951}{823})^6$ $= 6(\log 951 + \operatorname{colog} 823)$
$= 6(2.9782 + 7.0846 - 10)$
$= 0.3768$
$= \log 2.381.$

30. $(7\frac{6}{11})^{0.38}$ $(\frac{83}{11})^{0.38}$
$\log(\frac{83}{11})^{0.38}$ $0.38(\log 83 + \operatorname{colog} 11)$
$= 0.38(1.9191 + 8.9586 - 10)$
$= 0.3335$
$= \log 2.155.$

31. $(3\frac{7}{31})^{4.17}$ $= (\frac{120}{31})^{4.17}.$
$\log(\frac{120}{31})^{4.17}$ $= 4.17(\log 120 + \operatorname{colog} 31)$
$= 4.17(2.0792 + 8.5086 - 10)$
$= 2.4511$
$= \log 282.6.$

32. $(1\frac{2}{11})^{3.2}$ $= (\frac{13}{11})^{3.2}.$
$\log(\frac{13}{11})^{3.2}$ $= 3.2(\log 13 + \operatorname{colog} 11)$
$= 3.2(1.1139 + 8.9586 - 10)$
$= 0.2320$
$= \log 1.706.$

33. $(8\frac{3}{4})^{2.3}$ $= (\frac{35}{4})^{2.3}.$
$\log(\frac{35}{4})^{2.3}$ $= 2.3(\log 35 + \operatorname{colog} 4)$
$= 2.3(1.5441 + 9.3979 - 10)$
$= 2.1666$
$= \log 146.8.$

34. $(5\frac{31}{37})^{0.375}$ $= (\frac{216}{37})^{0.375}.$
$\log(\frac{216}{37})^{0.375}$ $= 0.375(\log 216 + \operatorname{colog} 37)$
$= 0.375(2.3345 + 8.4318 - 10)$
$= 0.2874$
$= \log 1.938.$

35. $\log 7 = 0.8451.$

$3)\underline{0.8451}$

$\log 7^{\frac{1}{3}} = 0.2817$

$= \log 1.913.$

36. $\log 11 = 1.0414.$

$5)\underline{1.0414}$

$\log 11^{\frac{1}{5}} = 0.2083$

$= \log 1.616.$

37. $\log 783 = 2.8938.$

$3)\underline{2.8938}$

$\log 783^{\frac{1}{3}} = 0.9646$

$= \log 9.218.$

38. $\log 8379 = 3.9232.$

$10)\underline{3.9232}$

$\log 8379^{\frac{1}{10}} = 0.3923$

$= \log 2.468$

39. $\log 906.80 = 2.9575.$

$4)\underline{2.9575}$

$\log 906.80^{\frac{1}{4}} = 0.7394$

$= \log 5.487.$

40. $\log 8.1904 = 0.9133.$

$5)\underline{0.9133}$

$\log 8.1904^{\frac{1}{5}} = 0.1826$

$= \log 1.523.$

41. $\log 0.17643 = 9.2466 - 10$

$\underline{\qquad\qquad 5}$

$46.2330 - 50$

$10. \quad - 10$

$6)\underline{56.2330 - 60}$

$\log 0.17643^{\frac{1}{6}} = 9.3722 - 10$

$= \log 0.2356.$

42. $\log 2.5637 = 0.4088$

$\underline{\qquad 3}$

$11)\underline{1.2264}$

$\log 2.5637^{\frac{1}{11}} = 0.1115$

$= \log 1.293.$

43. $\log (\frac{431}{788})^{\frac{1}{2}} = \frac{1}{2}(\log 431 + \operatorname{colog} 788).$

$\log \quad 431 = 2.6345$

$\operatorname{colog} 788 = \underline{7.1035 - 10}$

$9.7380 - 10$

$10. \quad - 10$

$2)\underline{19.7380 - 20}$

$9.8690 - 10 = \log 0.7397.$

44. $\log (\frac{71}{43406})^{\frac{1}{7}} = \frac{1}{7}(\log 71 + \operatorname{colog} 43406).$

$\log \quad 71 = 1.8513$

$\operatorname{colog} 43406 = \underline{5.3624 - 10}$

$7.2137 - 10$

$\underline{\qquad\qquad 4}$

$28.8548 - 40$

$30. \quad - 30$

$7)\underline{58.8548 - 70}$

$8.4078 - 10 = \log 0.02558.$

45. $(9\frac{1}{3})^{\frac{1}{3}} = (\frac{408}{43})^{\frac{1}{3}}$.

$$\log(\tfrac{408}{43})^{\frac{1}{3}} = \tfrac{1}{3}(\log 408 + \operatorname{colog} 43).$$

$$\log \quad 408 = 2.6107$$
$$\operatorname{colog} \quad 43 = 8.3065 - 10$$
$$5)\overline{0.9772}$$
$$0.1954 = \log 1.568.$$

46. $(11\frac{1}{4})^{\frac{4}{5}} = (\frac{802}{71})^{\frac{4}{5}}$.

$$\log(\tfrac{802}{71})^{\frac{4}{5}} = \tfrac{4}{5}(\log 802 + \operatorname{colog} 71).$$

$$\log \quad 802 = 2.9042$$
$$\operatorname{colog} \quad 71 = \underline{8.1487 - 10}$$
$$1.0529$$
$$\tfrac{4}{5}(1.0529) = 0.8423 = \log 6.955.$$

47. $5^x = 20$.

$$x \log 5 = \log 20$$
$$x = \frac{\log 20}{\log 5}$$
$$= \frac{1.3010}{0.6990} = 1.861.$$

48. $(1.3)^x = 2.1$.

$$x \log 1.3 = \log 2.1$$
$$x = \frac{\log 2.1}{\log 1.3}$$
$$= \frac{0.3222}{0.1139} = 2.829.$$

49. $(0.9)^x = \frac{1}{2}$.

$$x \log 0.9 = \log 0.5$$
$$x = \frac{\log 5}{\log 9}$$
$$= \frac{0.6990}{0.9542} = 0.7315.$$

50. $\sqrt[5]{\dfrac{0.0075433^2 \times 78.343 \times 8172.4^{\frac{1}{3}} \times 0.00052}{64285^{\frac{1}{3}} \times 154.27^4 \times 0.001 \times 586.79^{\frac{1}{2}}}}$.

$\log \ 0.0075433^2 = 5.7552 - 10$
$\log \ 78.343 = 1.8940$
$\log \ 8172.4^{\frac{1}{3}} = 1.3041$
$\log \ 0.00052 = 6.7160 - 10$
$\operatorname{colog} \ 64285^{\frac{1}{3}} = 8.3973 - 10$
$\operatorname{colog} \ 15427^4 = 1.2468 - 10$
$\operatorname{colog} \ 0.001 = 3.0000$
$\operatorname{colog} \ 586.79^{\frac{1}{2}} = 8.6158 - 10$

$5)\overline{36.9292 - 50}$
$7.3858 - 10 = \log 0.002431$

51. $\sqrt[5]{\dfrac{15.832^3 + 5793.6^{\frac{1}{3}} \times 0.78426}{0.000327^{\frac{1}{3}} \times 768.94^2 \times 3015.3 \times 0.007^{\frac{1}{2}}}}$.

$\log \ 15.832^3 = 3.5988$
$\log \ 5793.6^{\frac{1}{3}} = 1.2543$
$\log \ 0.78426 = 9.8445 - 10$
$\operatorname{colog} 0.000327^{\frac{1}{3}} = 1.1618$
$\operatorname{colog} \ 768.94^2 = 4.2282 - 10$
$\operatorname{colog} \ 3015.3 = 6.5207 - 10$
$\operatorname{colog} \ 0.007^{\frac{1}{2}} = 1.0774$

$27.7357 - 30$
$20. \quad - 20$

$5)\overline{47.7357 - 50}$
$9.5471 - 10 = \log 0.3525.$

52. $\sqrt[5]{\dfrac{7.1895 \times 4764.2^2 \times 0.00326^5}{0.00048953 \times 457^3 \times 5764.4^2}}$.

log $7.1895 = 0.8566$
log $4764.2^2 = 7.3558$
log $0.00326^5 = 7.5660 - 20$
colog $0.00048953 = 3.3102$
colog $457^3 = 2.0203 - 10$
colog $5764.4^2 = 2.4786 - 10$
$23.5875 - 40$
$10. \quad - 10$
$5)\overline{33.5875 - 50}$
$6.7175 - 10 = \log 0.0005218.$

53. $\sqrt[5]{\dfrac{3.1416 \times 4771.21 \times 2.7183^{\frac{1}{2}}}{30.103^4 \times 0.4343^{\frac{1}{2}} \times 69.897^4}}$.

log $3.1416 = 0.4971$
log $4771.21 = 3.6786$
log $2.7183^{\frac{1}{2}} = 0.2172$
colog $30.103^4 = 4.0856 - 10$
colog $0.4343^{\frac{1}{2}} = 0.1811$
colog $69.897^4 = 2.6220 - 10$
$11.2816 - 20$
$30. \quad - 30$
$5)\overline{41.2816 - 50}$
$8.2563 - 10 = \log 0.01804.$

54. $\sqrt[7]{\dfrac{0.03271^2 \times 53.429 \times 0.77542^3}{32.769 \times 0.000371^4}}$.

log $0.03271^2 = 7.0292 - 10$
log $53.429 = 1.7278$
log $0.77542^3 = 9.6688 - 10$
colog $32.769 = 8.4845 - 10$
colog $0.000371^4 = 13.7224$
$7)\overline{10.6327}$
$1.5190 = \log 33.04.$

55. $\sqrt[3]{\dfrac{732.056^2 \times 0.0003572^4 \times 89793}{42.2798^3 \times 3.4574 \times 0.0026518^5}}$.

log $732.056^2 = 5.7290$
log $0.0003572^4 = 6.2116 - 20$
log $89793 = 4.9533$
colog $42.2798^3 = 5.1217 - 10$
colog $3.4574 = 9.4612 - 10$
colog $0.0026518^5 = 12.8825$
$3)\overline{4.3593}$
$1.4531 = \log 28.39.$

56. $\sqrt[3]{\dfrac{7932 \times 0.00657 \times 0.80464}{0.03274 \times 0.6428}}$.

$\log \quad 7932 = 3.8994$
$\log \quad 0.00657 = 7.8176 - 10$
$\log \quad 0.80464 = 9.9056 - 10$
$\operatorname{colog} 0.03274 = 1.4849 - 10$
$\operatorname{colog} \quad 0.6428 = 0.1919$
$3\overline{)3.2994}$
$1.0998 = \log 12.58.$

57. $\sqrt[3]{\dfrac{7.1206 \times \sqrt{0.13274} \times 0.057389}{\sqrt{0.43468} \times 17.385 \times \sqrt{0.0096372}}}$.

$\log \quad 7.1206 = 0.8525$
$\log \quad \sqrt{0.13274} = 9.5615 - 10$
$\log \quad 0.057389 = 8.7588 - 10$
$\operatorname{colog} \quad \sqrt{0.43468} = 0.1809$
$\operatorname{colog} \quad 17.385 = 8.7599 - 10$
$\operatorname{colog} \sqrt{0.0096372} = 1.0080$
$3\overline{)29.1216 - 30}$
$9.7072 - 10 = \log 0.5096.$

58. $\left\{\dfrac{3.075526^{\frac{1}{2}} \times 5771.2^{\frac{1}{4}} \times 0.0036984^{\frac{1}{5}} \times 7.74}{72258 \times 327.93^{3} \times 86.97^{5}}\right\}^{\frac{2}{3}}$

$\log \quad 3.075526^{\frac{1}{2}} = 0.9758$
$\log \quad 5771.2^{\frac{1}{4}} = 1.8806$
$\log 0.0036984^{\frac{1}{5}} = 9.5136 - 10$
$\log \quad 7.74 = 0.8887$
$\operatorname{colog} \quad 72258 = 5.1412 - 10$
$\operatorname{colog} \quad 327.93^{3} = 2.4526 - 10$
$\operatorname{colog} \quad 86.97^{5} = 0.3030 - 10$
$1.1555 - 20$
3
$3.4665 - 60$
$40 \quad - 40$
$5\overline{)43.4665 - 100}$
$8.6933 - 20$
$= \log 0.000000000004936.$

Exercise 120.

1. In how many years will \$100 amount to \$1050, at 5 per cent compound interest?

$$A = PR^n$$

Put $A = 1050$

$P = 100$

$R = 1.05$

Then $1050 = 100 \times 1.05^n$

$$1.05^n = \frac{1050}{100}$$

Take the logarithms of both sides of the equation,

$$n \log 1.05 = \log 1050 - \log 100$$

$$n = \frac{\log 1050 - \log 100}{\log 1.05}$$

$$= \frac{3.0212 - 2}{0.0212} = \frac{1.0212}{0.0212}$$

$$\log 1.0212 = 0.0091$$

$$\text{colog } 0.0212 = \underline{1.6737}$$

$$\therefore \log n = 1.6828$$

$$n = 48.18$$

$\therefore$ **It will take 48.18 years.**

2. In how many years will \$ A amount to \$ B (1) at simple *interest*, (2) at compound interest, r and R being used in their usual sense?

(1) $B = A(1 + nr)$

$$\therefore n = \frac{B - A}{Ar}$$

$\frac{B - A}{Ar}$ years.

(2) $B = AR^n$

$$R^n = \frac{B}{A}$$

$$n \log R = \log B - \log A$$

$$n = \frac{\log B - \log A}{\log R}$$

$\frac{\log B - \log A}{\log R}$ years.

3. Find the difference (to five places of decimals) between the amount of \$1 in 2 years, at 6 per cent compound interest, according as the interest is due yearly or monthly.

(1) Let the interest be due yearly.

$$A = PR^n$$
$$P = 1$$
$$R = 1.06$$
$$n = 2$$
$$\therefore A = 1 \times (1.06)^2$$
$$= 1.1236$$

(2) Let the interest be due monthly.

$$A = P\left(1 + \frac{r}{12}\right)^{12n}$$
$$P = 1$$
$$r = 0.06$$
$$1 + \frac{r}{12} = 1.005$$
$$12n = 24$$
$$\therefore A = 1 \times 1.005^{24}$$
$$\log A = 24 \log 1.005$$
$$= 0.0528$$
$$A = 1.12926$$

$\$1.12926 - \$1.1236 = \$0.00366.$

The difference is $\$0.00366$.

4. At 5 per cent, find the amount of an annuity of $\$A$ which has been left unpaid for 4 years.

$$A' = \frac{s(R^n - 1)}{r}$$
$$s = A$$
$$R = 1.05$$
$$r = 0.05$$
$$n = 4$$

$$A' = \frac{A(1.05^4 - 1)}{0.05}$$
$$= A\frac{0.2155}{0.05}$$
$$= A \times 4.31$$

The amount is $4.31 \times A$ dollars.

5. Find the present value of an annuity of $\$100$ for 5 years, reckoning interest at 4 per cent.

$$P = \frac{S}{R^n} \times \frac{R^n - 1}{R - 1}$$
$$S = 100$$
$$R = 1.04$$
$$n = 5$$
$$\therefore P = \frac{100}{1.04^5} \times \frac{1.04^5 - 1}{1.04 - 1}$$

By logarithms,

$$P = \frac{100}{1.216} \times \frac{0.216}{0.04}$$
$$P = 444$$

The present value is $\$444$.

6. A perpetual annuity of \$1000 is to be purchased, to begin at the end of 10 years. If interest is reckoned at $3\frac{1}{2}$ per cent, what should be paid for it?

Let P = present value.

Then PR^{10} = value at end of 10 years.

But $\frac{S}{r}$ = value of perpetual annuity.

$$\therefore PR^{10} = \frac{S}{r}$$

$$P = \frac{S}{R^{10}r}$$

$$S = 1000$$

$$R = 1.035$$

$$r = 0.035$$

$$\therefore P = \frac{1000}{1.035^{10} \times 0.035}$$

By logarithms, $p = 20270$

\$20,270 should be paid.

7. A debt of \$1850 is discharged by two payments of \$1000 each, at the end of one and two years. Find the rate of interest paid.

Let r = rate of interest.

Then $1850(1+r)$ = amount of debt at end of first year.

$1850(1+r) - 1000$ = amount of debt after first payment.

$[1850(1+r) - 1000](1+r)$ = amount of debt at end of second year.

$$\therefore [1850(1+r) - 1000](1+r) = 1000$$

$$850 + 2700r + 1850r^2 = 1000$$

$$1850r^2 + 2700r = 150$$

$$37r^2 + 54r = 3$$

$$\therefore r = \frac{-27 \pm 2\sqrt{210}}{37}$$

By logarithms, $r = 0.05351$

The rate of interest is 0.05351.

8. Reckoning interest at 4 per cent, what annual premium should be paid for 30 years, in order to secure \$2000 to be paid at the end of that time, the premium being due at the beginning of each year?

$$P = \frac{Ar}{R(R^n - 1)}$$

$$A = 2000$$

$$r = 0.04$$
$$R = 1.04$$
$$n = 30$$
$$\therefore P = \frac{2000 \times 0.04}{1.04\,(1.04^{30} - 1)}$$

By logarithms, $P = 34.40$

$\therefore$ The annual premium is \$34.40.

9. An annual premium of \$150 is paid to a life-insurance company for insuring \$5000. If money is worth 4 per cent, for how many years must the premium be paid in order that the company may sustain no loss?

$$P = \frac{Ar}{R^n - 1}$$
$$P(R^n - 1) = Ar$$
$$R^n = \frac{Ar + P}{P}$$
$$n \log R = \log (Ar + P) - \log P$$
$$\therefore n = \frac{\log (Ar + P) - \log P}{\log R}$$
$$P = 150$$
$$A = 5000$$
$$R = 1.04$$
$$r = 0.04$$
$$n = \frac{\log 350 - \log 150}{\log 1.04}$$
$$= \frac{0.3680}{0.0170} = 21.65$$

$\therefore$ The premium must be paid 21.65 years.

10. What may be paid for bonds due in 10 years, and bearing semi-annual coupons of 4 per cent each, in order to realize 3 per cent semi-annually, if money is worth 3 per cent semi-annually?

$$P(1 + x)^n = \frac{Sq + Sr(1 + q)^n - Sr}{q}$$
$$P = \frac{Sq + Sr(1 + q)^n - Sr}{q(1 + x)^n}$$
$$S = 100$$
$$q = 0.03$$
$$r = 0.04$$

$$x = 0.03$$
$$n = 20$$
$$\therefore P = \frac{3 + 4\,(1.03^{20} - 1)}{0.03\,(1.03)^{20}}$$

By logarithms, $$P = \frac{6.212}{0.05409} = 114.8$$

The bonds must be bought at 114.80.

11. When money is worth 2 per cent semi-annually, if bonds having 12 years to run, and bearing semi-annual coupons of $3\frac{1}{2}$ per cent each, are bought at $114\frac{1}{4}$, what per cent is realized on the investment?

Let x = rate of interest received on the investment.

Then $$1 + x = \left(\frac{Sq + Sr(1+q)^n - Sr}{Pq}\right)^{\frac{1}{n}}$$
$$S = 100$$
$$q = 0.02$$
$$r = 0.035$$
$$n = 24$$
$$P = 114.125$$
$$\therefore 1 + x = \left(\frac{2 + 3.5 \times 1.02^{24} - 3.5}{114.125 \times 0.02}\right)^{\frac{1}{24}}$$
$$= \left(\frac{4.13}{2.2825}\right)^{\frac{1}{24}} = 1.025.$$
$$x = 0.025$$

$\therefore 2\frac{1}{2}$ per cent semi-annually is realized on the investment; that is 5 per cent per annum.

12. If \$126 is paid for bonds due in 12 years, and yielding $3\frac{1}{2}$ per cent semi-annually, what per cent is realized on the investment, provided money is worth 2 per cent semi-annually?

Let x = rate of interest received on the investment.

Then $$1 + x = \left(\frac{Sq + Sr(1+q)^n - Sr}{Pq}\right)^{\frac{1}{n}}$$
$$S = 100$$
$$q = 0.02$$
$$r = 0.035$$
$$n = 24$$
$$P = 126$$

$$\therefore\ 1+x=\left(\frac{2+3.5\times 1.02^{24}-3.5}{126\times 0.02}\right)^{\frac{1}{24}}$$

$$=\left(\frac{4.13}{2.52}\right)^{\frac{1}{24}}=1.021$$

$$x=0.021$$

∴ 4.2 per cent per annum is made on the investment.

13. A person borrows $600.25. How much must he pay annually that the whole debt may be discharged in 35 years, interest being reckoned at 4 per cent simple interest?

Let p = amount of debt.
s = annual payment.

Then $$PR^n=\frac{S(R^n-1)}{r}$$

$$\therefore\ S=\frac{PrR^n}{R^n-1}$$

$$P=600.25$$
$$r=0.04$$
$$R=1.04$$
$$n=35$$

$$S=\frac{600.25\times 0.04\times 1.04^{35}}{1.04^{35}-1}$$

$$=\frac{94.5}{2.935}=32.3$$

∴ He must pay $32.30 per year.

14. A perpetual annuity of $100 a year is sold for $2500. At what rate is the interest reckoned?

$$P=\frac{S}{r}$$

$$\therefore\ r=\frac{S}{P}$$

$$P=2500$$
$$S=100$$

$$\therefore\ r=\tfrac{100}{2500}$$

$$r=0.04$$

∴ The interest is reckoned at 4 per cent.

15. A perpetual annuity of \$320, to begin 10 years hence, is to be purchased. If interest is reckoned at $3\frac{1}{2}$ per cent, what should be paid for it?

Let P = present value of the annuity.

Then $P(1.032)^{10}$ = its value 10 years hence.

But $\frac{320}{0.032}$ = its value 10 years hence.

$$\therefore P(1.032)^{10} = \frac{320}{0.032} = 10000$$

$$P = \frac{10000}{(1.032)^{10}} = 7377$$

$\therefore$ \$7377 should be paid for the annuity.

16. A sum of \$10,000 is loaned at 4 per cent. At the end of the first year a payment of \$400 is made; and at the end of each following year a payment is made greater by 30 per cent than the preceding payment. Find in how many years the debt will be paid.

Let n = number of years in which the debt will be paid.

Then

$10000(1.04)^n$ = sum to which 10,000 dollars will amount at the end of that time.

$400(1.04)^{n-1} + 400 \times 1.30(1.04)^{n-2} + 400(1.30)^2(1.04)^{n-3} + \text{etc.}$

= sum to which the payments would amount at the end of that time.

$$\therefore 10000(1.04)^n = 400(1.04)^{n-1} + 400 \times 1.30(1.04)^{n-2} + 400(1.30)^2(1.04)^{n-3} + \text{etc.}$$

$$= 400[1.04^{n-1} + 1.30(1.04)^{n-2} + (1.30)^2(1.04)^{n-3} + \text{etc.}]$$

But $1.04^{n-1} + 1.30(1.04)^{n-2} + (1.30)^2(1.04)^{n-3} + \text{etc.}$ is a geometrical progression of which the ratio is $\frac{1.30}{1.04}$, and the sum

$$= \frac{1.04^{n-1}\left[\left(\frac{1.30}{1.04}\right)^n - 1\right]}{\frac{1.30}{1.04} - 1} = \frac{1.30^n - 1.04^n}{1.30 - 1.04}$$

$$\therefore 10000(1.04)^n = 400\,\frac{1.30^n - 1.04^n}{1.30 - 1.04}$$

$$25(1.30 - 1.04) = \frac{1.30^n - 1.04^n}{1.04^n}$$

$$25 \times 0.26 = \left(\frac{1.30}{1.04}\right)^n - 1$$

$$\left(\frac{1.30}{1.04}\right)^n = 7.5$$

$$n \log \frac{1.30}{1.04} = \log 7.5$$

$$n = \frac{\log 7.5}{\log 1.30 - \log 1.04}$$

$$= \frac{0.8751}{0.0969} = 9.032$$

$\therefore$ The debt will be paid in 9.032 years.

17. A man with a capital of \$100,000 spends every year \$9000. If the current rate of interest is 5 per cent, in how many years will he be ruined?

Let n = number of years in which he will be ruined.

Then

$100000(1.05)^n$ = sum to which his capital will amount in n years.

$9000(1.05)^{n-1} + 9000(1.05)^{n-2} + \text{etc.}$

= sum to which his expenditure will amount in n years.

$\therefore\ 9000(1.05)^{n-1} + 9000(1.05)^{n-2} + \text{etc.} = 100000(1.05)^n$

$$9000 \frac{1.05^{n-1}\left(\frac{1}{1.05^n} - 1\right)}{\frac{1}{1.05} - 1} = 100000(1.05)^n$$

$$9000 \frac{\left(\frac{1}{1.05^n} - 1\right)}{\left(\frac{1}{1.05} - 1\right)1.05} = 100000$$

$$\frac{\frac{1}{1.05^n} - 1}{1 - 1.05} = \frac{100}{9}$$

$$\frac{1}{1.05^n} = 1 - \frac{5}{9} = \frac{4}{9}$$

$$1.05^n = \tfrac{9}{4}$$

$$n \log 1.05 = \log 9 - \log 4$$

$$\therefore\ n = \frac{\log 9 - \log 4}{\log 1.05}$$

$$= \frac{0.3521}{0.0212} = 16.23$$

$\therefore$ He will be ruined in 16.23 years.

18. Find the amount of $365 at compound interest for 20 years, at 5 per cent.

$$A = 365(1.05)^{20} = 969.$$

$\therefore$ $969 is the amount.

Exercise 121.

1. How many different permutations can be made of the letters in the word *Ecclesiastical*, taken all together?

There are 14 letters. There are 2 *a*'s, 2 *e*'s, 2 *i*'s, 2 *l*'s, 2 *s*'s, and 3 *c*'s.

Hence the number of permutations possible is

$$\frac{\lfloor 14}{\lfloor 2 \times \lfloor 2 \times \lfloor 2 \times \lfloor 2 \times \lfloor 2 \times \lfloor 3} = 454{,}053{,}600.$$

2. Of all the numbers that can be formed with four of the digits 5, 6, 7, 8, 9, how many will begin with 56?

The first two places can be filled in only 1 way.
The third place can be filled in 3 ways (by 7, 8, or 9).
The fourth place can be filled in 2 ways.
Hence, the whole number is $1 \times 3 \times 2 = 6$.

3. If the number of permutations of n things, taken 4 together, be equal to 12 times the permutations of n things, taken 2 together, find n.

The number of n things taken 4 together is

$$n(n-1)(n-2)(n-3).$$

The number of n things taken 2 together is

$$n(n-1).$$

$$\therefore n(n-1)(n-2)(n-3) = 12(n)(n-1).$$

$$\therefore (n-2)(n-3) = 12,$$

or $$n^2 - 5n + 6 = 12.$$

Solving this equation, $n = 6$.

4. With 3 consonants and 2 vowels, how many words of 3 letters can be formed, beginning and ending with a consonant, and having a vowel for the middle letter?

The first place can be filled in 3 ways.
The second place can be filled in 2 ways.
The third place can be filled in 2 ways.
Hence, whole number of words $= 3 \times 2 \times 2 = 12$ words.

5. Out of 20 men, in how many different ways can 4 be chosen to be on guard? In how many of these would one particular man be taken, and from how many would he be left out?

The number of ways in which we can select 4 men out of 20 is

$$20 \times 19 \times 18 \times 17 = 116{,}280 \text{ ways.}$$

The 4 men on guard may be arranged in $\lfloor\underline{4} = 24$ ways.

Hence, number of relations is $\frac{116280}{24} = 4845$.

Since in 20 men there are 5 groups of 4 each, one man would appear in every fifth group.

Hence, one man would be taken in $\frac{4845}{5} = 969$ ways.

$4845 - 969 = 3876$ ways from which he is left out.

6. Of 12 books of the same size, a shelf will hold 5. How many different arrangements on the shelf may be made?

The first place can be filled in 12 ways.
The second place can be filled in 11 ways.
The third place can be filled in 10 ways.
The fourth place can be filled in 9 ways.
The fifth place can be filled in 8 ways.
Hence, whole number of ways $= 12 \times 11 \times 10 \times 9 \times 8$
$= 95{,}040$ ways.

7. Of 8 men forming a boat's crew, one is selected as stroke. How many arrangements of the rest are possible? When the 4 who row on each side are decided on, how many arrangements are still possible?

When one man is chosen for stroke, the number of arrangements of the seven men left is

$$\lfloor\underline{7} = 7 \times 6 \times 5 \times 4 \times 3 \times 2 \times 1 = 5040.$$

The number of arrangements of the three men on the side with the stroke is $\lfloor\underline{3}$; on the other side is $\lfloor\underline{4}$. Hence, the whole number is

$$\lfloor\underline{3} \times \lfloor\underline{4} = 3 \times 2 \times 4 \times 3 \times 2 = 144.$$

8. How many signals may be made with 6 flags of different colors which can be hoisted either singly, or any number at a time?

The number of ways, when all are taken, would be

	$6\times5\times4\times3\times2\times1$	$=720$
When five,	$6\times5\times4\times3\times2$	$=720$
four,	$6\times5\times4\times3$	$=360$
three,	$6\times5\times4$	$=120$
two,	6×5	$=30$
one,	6	$=6$
Hence, in all		1956

9. How many signals may be made with 8 flags of different colors which can be hoisted either singly, or any number at a time, one above another?

The number of signals, when all are used, would be

	$8\times7\times6\times5\times4\times3\times2\times1$	$=40{,}320$
When seven,	$8\times7\times6\times5\times4\times3\times2$	$=40{,}320$
six,	$8\times7\times6\times5\times4\times3$	$=20{,}160$
five,	$8\times7\times6\times5\times4$	$=6{,}720$
four,	$8\times7\times6\times5$	$=1{,}680$
three,	$8\times7\times6$	$=336$
two,	8×7	$=56$
one,	8	$=8$
		$109{,}600$

Hence, 109,600 = number of signals in all.

10. How many different signals can be made with 10 flags, of which 3 are white, 2 red, and the rest blue, always hoisted all together and one above another?

Since 3 are white,
2 red,
and 5 blue,
there are 10 in all.

Hence, whole numbers of signals is $\frac{\lfloor 10}{\lfloor 3 \lfloor 2 \lfloor 5} = 2520.$

11. How many signals can be made with 7 flags, of which 2 are red, 1 white, 3 blue, and 1 yellow, always displayed all together and one above another?

$$\frac{\lfloor 7}{\lfloor 2 \lfloor 1 \lfloor 3 \lfloor 1} = \frac{7 \times 6 \times 5 \times 4 \times 3 \times 2 \times 1}{2 \times 3 \times 2} = 420.$$

12. In how many different ways may the 8 men serving a field-gun be arranged so that the same man may always lay the gun?

$8 - 1 = 7.$

$\lfloor 7 = 7 \times 6 \times 5 \times 4 \times 3 \times 2 \times 1 = 5040$ ways.

13. Find the number of signals which can be made with 4 lights of different colors, when displayed any number at a time, arranged above one another, side by side, or diagonally.

Number of ways, when four are taken, is

$$4 \times 3 \times 2 \times 1 = 24$$

When three, $4 \times 3 \times 2 = 24$

two, $4 \times 3 = 12$

60

Then 60 arrangements can be made in four ways: either side by side, diagonally in two ways, or one above another.

$$\therefore 60 \times 4 = 240.$$

And when one light is taken, it can be displayed in one way only.

Hence, 4 different signals can be made with the 4 lights of different colors, 1 at a time.

Therefore the whole number of ways is $240 + 4 = 244$.

14. From 10 soldiers and 8 sailors, how many different parties of 3 soldiers and 3 sailors can be formed?

$\frac{10 \times 9 \times 8}{1 \times 2 \times 3} = 120$, number of selections of 3 out of 10,

and $\frac{8 \times 7 \times 6}{1 \times 2 \times 3} = 56$, number of selections of 3 out of 8.

$\therefore 120 \times 56 = 6720$, number of parties that can be formed.

15. How many signals can be made with 3 blue and 2 white flags, which can be displayed either singly, or any number at a time, one above another?

The number of ways in which all can be arranged is

$$\frac{\lfloor 5}{\lfloor 3 \lfloor 2} = 10 \text{ ways.}$$

They can be arranged singly in 2 ways,

2 and 2 in 4 ways,

3 and 3 in 7 ways,

4 and 4 in $\frac{\lfloor 4}{\lfloor 2 \lfloor 3} + \frac{\lfloor 4}{\lfloor 3 \lfloor 1} = 10$ ways.

Hence, whole number of ways is 33.

16. In how many ways can a party of 6 take their places at a round table?

If places are not relative, $\lfloor 6 = 720 =$ number of ways.

If relative, $\lfloor 5 = 120 =$ number of ways.

17. Out of 12 Democrats and 16 Republicans, how many different committees can be formed, each consisting of 3 Democrats and 4 Republicans?

The Democrats can be selected in $\frac{12 \times 11 \times 10}{1 \times 2 \times 3} = 220$ ways.

The Republicans in $\frac{16 \times 15 \times 14 \times 13}{1 \times 2 \times 3 \times 4} = 1820$ ways.

Hence, the whole committee can be appointed in

$$220 \times 1820 = 400{,}400 \text{ ways.}$$

18. From 12 soldiers and 8 sailors, how many different parties of 3 soldiers and 2 sailors can be formed?

The soldiers can be arranged in $\frac{12 \times 11 \times 10}{1 \times 2 \times 3} = 220$ ways.

The sailors can be appointed in $\frac{8 \times 7}{1 \times 2} = 28$ ways.

Hence, whole number of ways is $220 \times 28 = 6160$ ways.

19. Find the number of combinations of 100 things, 97 together.

The number is the same as the number of selections of 3 things from 100 things.

Hence, the number of ways in which they can be selected is

$$\frac{100 \times 99 \times 98}{\lfloor 3} = 161{,}700.$$

20. With 20 consonants and 5 vowels, how many different words can be formed consisting of 3 different consonants and 2 different vowels, any arrangement of letters being considered a word?

Three consonants can be selected in

$$\frac{20 \times 19 \times 18}{1 \times 2 \times 3} = 1140 \text{ ways,}$$

and two vowels in $\dfrac{5 \times 4}{1 \times 2} = 10$ ways.

When they have been selected they can be arranged in

$$\lfloor 5 = 120 \text{ different orders.}$$

$$\therefore 1140 \times 10 \times 120 = 1{,}368{,}000.$$

21. Of 30 things, how many must be taken together in order that, having that number for selection, there may be the greatest possible variety of choice?

Here n is even, and $r = \dfrac{n}{2} = \dfrac{30}{2} = 15.$

22. There are m things of one kind and n of another; how many different sets can be made containing r things of the first and s of the second?

Let x = number of ways r elements can be selected from m elements,

and y = number of ways s elements can be selected from n elements.

$$\therefore x = \frac{\text{number of arrangements}}{\lfloor r}$$

$$= \frac{m(m-1)(m-2) \cdots [m-(r-1)]}{r}.$$

Multiply both terms of the fraction by $\lfloor m-r$.

$$x = \frac{\lfloor m}{\lfloor r \lfloor m-r}. \tag{1}$$

$$\therefore y = \frac{\text{number of arrangements}}{s}$$

$$= \frac{n(n-1)(n-2)\ldots\ldots[n-(s-1)]}{s}$$

Multiply both terms by $\lfloor n-s$,

$$y = \frac{\lfloor n}{\lfloor s \lfloor n-s}. \tag{2}$$

Multiply (1) and (2),

$$xy = \frac{\lfloor m \times \lfloor n}{(\lfloor r \lfloor m-r)(\lfloor s \lfloor n-s)}.$$

23. The number of combinations of n things, taken r together, is 3 times the number taken $r-1$ together, and half the number taken $r+1$ together. Find n and r.

$$\frac{\lfloor n}{\lfloor r \lfloor n-r} = \frac{3\lfloor n}{\lfloor r-1 \lfloor n-r+1}, \tag{1}$$

and

$$\frac{2\lfloor n}{\lfloor r \lfloor n-r} = \frac{\lfloor n}{\lfloor r+1 \lfloor n-r-1}. \tag{2}$$

$$(1) = \frac{1}{r} \times \frac{\lfloor n}{\lfloor r-1 \lfloor n-r} = \frac{3}{n-r+1} \times \frac{\lfloor n}{\lfloor r-1 \lfloor n-r}.$$

Divide by $\frac{\lfloor n}{\lfloor r-1 \lfloor n-r}$, $\frac{1}{r} = \frac{3}{n-r+1}$,

$$n-r+1 = 3r,$$

$$n = 4r-1.$$

$$(2) = \frac{2}{n-r} \times \frac{\lfloor n}{\lfloor r \lfloor n-r+1} = \frac{1}{r+1} \times \frac{\lfloor n}{\lfloor r \lfloor n-r-1}.$$

Divide by $\frac{\lfloor n}{\lfloor r \lfloor n-r+1}$, $\frac{2}{n-r} = \frac{1}{r+1}$,

$$2r+2 = n-r,$$

$$n = 3r+2,$$

$$3r+2 = 4r-1.$$

$$\therefore r = 3,$$

and

$$n = 11.$$

24. In how many ways may 12 things be divided into 3 sets of 4 ?

Here the sets are indifferent, and the answer is

$$\frac{\lfloor 12}{\lfloor 3 \lfloor 4 \lfloor 4 \lfloor 4} = 5775.$$

25. How many words of 6 letters may be formed of 3 vowels and 3 consonants, the vowels always having the even places ?

The vowels may be arranged in $\lfloor 3$, and the consonants in $\lfloor 3$, ways.

$$\lfloor 3 \times \lfloor 3 = 6 \times 6 = 36 \text{ ways.}$$

26. From a company of 90 men, 20 are detached for mounting guard each day. How long will it be before the same 20 men are on guard together, supposing they were to be changed as much as possible; and how many times will each man have been on guard ?

The 90 men can be arranged in $\lfloor 90$ ways.

The 20 detached in $\lfloor 20$ ways.

The 70 remaining in $\lfloor 70$ ways.

$\therefore \frac{\lfloor 90}{\lfloor 20 \lfloor 70}$ = whole number of ways.

One man will be on guard all the time, leaving 89 men who can be arranged in $\lfloor 89$ ways.

That one will be one of the 20 detached, leaving 19 who can be arranged in $\lfloor 19$ ways.

The remaining 70 can be arranged in $\lfloor 70$ ways.

$\therefore \frac{89}{\lfloor 19 \lfloor 70}$ = whole number of times.

27. Supposing that a man can place himself in 3 distinct attitudes, how many signals can be made by 4 men placed side by side ?

The first can be placed in 3 attitudes.

The second can be placed in 3 attitudes.

The third can be placed in 3 attitudes.

The fourth can be placed in 3 attitudes.

Hence, all can be placed in 3^4 attitudes.

But as one is the attitude of rest, therefore, $3^4 - 1 = 80$ signals.

28. How many different arrangements may be made of 11 cricketers, supposing the same 2 always to bowl?

Putting aside the 2 bowlers, 9 are left, and they can be arranged in $\underline{9}$ ways, and the bowlers in $\underline{2}$ ways.

$$\therefore \underline{2}\,\underline{9} = 725{,}760 \text{ ways.}$$

29. Five flags of different colors can be hoisted either singly, or any number at a time, one above another. How many different signals can be made with them?

When they are all displayed, they can be arranged in

$$5 \times 4 \times 3 \times 2 \times 1 = 120$$

When four,	$5 \times 4 \times 3 \times 2$	$= 120$
three,	$5 \times 4 \times 3$	$= 60$
two,	5×4	$= 20$
one,	5	$= 5$
whole number of signals		$= 325$

30. How many signals can be made with 5 lights of different colors, which can be displayed either singly or any number at a time side by side, or one above another?

When they are all displayed, they can be arranged in

$$5 \times 4 \times 3 \times 2 \times 1 = 120$$

When four,	$5 \times 4 \times 3 \times 2$	$= 120$
three,	$5 \times 4 \times 3$	$= 60$
two,	5×4	$= 20$
whole number of arrangements		$= 320$

Since they can be displayed as many ways side by side as one above the other, multiply by 2,

$$320 \times 2 = 640.$$

Since 5 lights of different colors, displayed singly, give 5 different signals, the whole number of signals will be

$$640 + 5 = 645.$$

31. The number of permutations of n things, 3 at a time, is 6 times the number of combinations, 4 at a time. Find n.

$$n(n-1)(n-2) = 6\left(\frac{n(n-1)(n-2)(n-3)}{\underline{|4}}\right).$$

Divide by $n(n-1)(n-2)$, $1 = \dfrac{6n-18}{\underline{|4}}$,

$$24 = 6n - 18,$$
$$6n = 42.$$
$$\therefore n = 7.$$

EXERCISE 122.

1. The chance of an event happening is $\frac{4}{7}$. What are the odds in favor of the event?

The chance of its not happening is $1 - \frac{4}{7} = \frac{3}{7}$.
The odds in its favor are therefore 4 to 3.

2. If the odds are 10 to 1 against an event, what is the chance of its happening?

There is 1 chance out of 11 that the event will happen.
Hence the chance of its happening is $\frac{1}{11}$.

3. In one throw with a pair of dice what number is most likely to be thrown? Find the odds against throwing that number.

12 can be thrown in 1 way, 6, 6.
11 can be thrown in 2 ways, 6, 5.
10 can be thrown in 3 ways, 6, 4, or 5, 5.
9 can be thrown in 4 ways, 6, 3, or 5, 4.
8 can be thrown in 5 ways, 6, 2, 5, 3, or 4, 4.
7 can be thrown in 6 ways, 6, 1, 5, 2, or 4, 3.
6 can be thrown in 5 ways, 5, 1, 4, 2, or 3, 3.
5 can be thrown in 4 ways, 4, 1, or 3, 2.
4 can be thrown in 3 ways, 3, 1, or 2, 2.
3 can be thrown in 2 ways, 2, 1.
2 can be thrown in 1 way 1, 1.

In all, 36 ways.

7 can be thrown in 6 ways, and is therefore most likely to be thrown. There are 30 chances that it will not be thrown. Hence the odds against it are 30 to 6.

4. Find the chance of throwing doublets in one throw with a pair of dice.

There are 36 throws, 6 of which are doublets.

Hence, the chance of throwing doublets is $\frac{6}{36} = \frac{1}{6}$.

5. If 10 persons stand in a line, what is the chance that 2 assigned persons will stand together?

If we call the two persons A and B, the chance that A will stand at the beginning of the line is $\frac{1}{10}$, and if A stands at the beginning of the line, the chance that B will have the second place is $\frac{1}{9}$.

Hence the chance that A and B occupy these two positions together is $\frac{1}{10} \times \frac{1}{9} = \frac{1}{90}$.

Also the chance that A and B will occupy the tenth and ninth places is $\frac{1}{90}$.

If A occupies any of the 8 remaining positions, B may stand on either side of him.

The chance that A occupies one of these 8 positions is $\frac{8}{10}$.

The chance in such case that B occupies one of the two places beside A is $\frac{2}{9}$.

Hence, the chance that both events occur together is $\frac{8}{10} \times \frac{2}{9} = \frac{16}{90}$.

Hence, the chance that A and B stand together is $\frac{2}{90} + \frac{16}{90} = \frac{18}{90} = \frac{1}{5}$.

6. If 10 persons form a ring, what is the chance that 2 assigned persons will stand together?

Call the 2 assigned persons A and B.

Then if A occupies any position, B may stand on either side of him.

The chance that B does stand in one of these two positions is $\frac{2}{9}$.

Hence, the chance that A and B stand together is $\frac{2}{9}$.

7. Three balls are to be drawn from an urn containing 5 black, 3 red, and 2 white balls. What is the chance of drawing 1 red and 2 black balls?

There are 10 balls in the urn.

3 balls can be selected from these in $\frac{\lfloor 10}{\lfloor 7 \lfloor 3} = 120$ ways.

1 red ball can be selected in 3 ways.

2 black balls can be selected from 5 in $\frac{\lfloor 5}{\lfloor 3 \lfloor 2} = 10$ ways.

Hence, the required chance is $\frac{30}{120} = \frac{1}{4}$.

8. In a bag are 5 white and 4 black balls. If 4 balls are drawn out, what is the chance that they will be all of the same color?

There are 9 balls in the bag.

4 balls can be selected from these in $\frac{\lfloor 9}{\lfloor 5 \lfloor 4} = 126$ ways.

4 white balls can be selected from 5 in 5 ways.

4 black balls can be selected in 1 way.

Hence 4 balls all of the same color can be selected in 6 ways.

Hence, the required chance is $_1\frac{6}{2}\frac{}{6} = \frac{1}{21}$.

9. If 2 tickets are drawn from a package of 20 tickets marked 1, 2, 3, ·····, what is the chance that both will be marked with *odd* numbers?

There are 10 odd and 10 even numbers.

The chance that the first ticket is marked with an odd number is $\frac{1}{2}$.

If the first ticket is odd, there remain 10 even and 9 odd numbers in the package.

Hence, the chance that the second ticket is odd is $_1\frac{9}{9}$.

And the chance that both are odd is $\frac{1}{2} \times _1\frac{9}{9} = _3\frac{9}{8}$.

10. A bag contains 3 white, 4 black, and 5 red balls; 3 balls are drawn. Find the odds against the 3 being of three different colors.

The bag contains 12 balls.

3 balls can be selected from them in $\frac{\lfloor 12}{\lfloor 9 \lfloor 3} = 220$ ways.

1 white ball can be selected in 3 ways.

1 black ball can be selected in 4 ways.

1 red ball can be selected in 5 ways.

Hence, 3 balls of 3 different colors can be selected in

$$3 \times 4 \times 5 = 60 \text{ ways.}$$

And the odds against the 3 balls being of 3 different colors is 160 to 60, or 8 to 3.

11. There are 10 tickets numbered 1, 2, ····· 9, 0. Three tickets are drawn at random. Find the chance of drawing a total of 22.

Three tickets can be selected from the 10 in $\frac{\lfloor 10}{\lfloor 7 \lfloor 3} = 120$ ways.

Of these sets of 3, only 9, 8, 5, and 9, 7, 6 will give 22.

Hence, the chance of drawing a total of 22 is $_1\frac{2}{2}\frac{}{0} = \frac{1}{60}$.

Exercise 123.

1. Find continued fractions for $\frac{123}{157}$; $\frac{159}{47}$; $\sqrt{5}$; $\sqrt{11}$; $4\sqrt{6}$; and find the fourth convergent to each.

$$\frac{123}{157} = \frac{1}{1+}\,\frac{1}{3+}\,\frac{1}{1+}\,\frac{1}{1+}\,\frac{1}{1+}\,\frac{1}{1+}\,\frac{1}{1+}\,\frac{1}{1+}\,\frac{1}{2}$$

Quotients $= 1, 3, 1, 1, 1.$

Convergents $= \frac{0}{1}, \frac{1}{1}, \frac{3}{4}, \frac{4}{5}, \frac{7}{9}.$

Fourth convergent is $\frac{7}{9}$.

$$\frac{159}{47} = 3 + \frac{1}{2+}\,\frac{1}{1+}\,\frac{1}{1+}\,\frac{1}{1+}\,\frac{1}{1+}\,\frac{1}{3}$$

Quotients $= 2, 1, 1, 1.$

Convergents $= \frac{0}{1}, \frac{1}{2}, \frac{1}{3}, \frac{2}{5}, \frac{3}{8}.$

$\therefore$ Fourth convergent $= 3\frac{3}{8} = \frac{27}{8}$.

Let $\sqrt{5} = 2 + \frac{1}{x}.$

$$\therefore x = \frac{1}{\sqrt{5}-2} = \sqrt{5}+2 = 4 + \frac{1}{x}.$$

$$\therefore \sqrt{5} = 2 + \frac{1}{4}.$$

Quotients $= 4, 4, 4, 4.$

Convergents $= \frac{0}{1}, \frac{1}{4}, \frac{4}{17}, \frac{17}{72}, \frac{72}{305}.$

$\therefore$ Fourth convergent $= 2\frac{72}{305} = \frac{682}{305}.$

Let $\sqrt{11} = 3 + \frac{1}{x}.$

$$\therefore x = \frac{1}{\sqrt{11}-3} = \frac{\sqrt{11}+3}{2}.$$

Let $\frac{\sqrt{11}+3}{2} = 3 + \frac{1}{y}.$

$$\therefore y = \frac{2}{\sqrt{11}-3} = \sqrt{11}+3 = 6 + \frac{1}{x}.$$

$$\therefore \sqrt{11} = 3 + \frac{1}{3+}\,\frac{1}{6}.$$

Quotients $= 3, 6, 3, 6.$

Convergents $= \frac{0}{1}, \frac{1}{3}, \frac{6}{19}, \frac{18}{60}, \frac{120}{379}.$

$\therefore$ Fourth convergent $= 3\frac{120}{379} = \frac{1257}{379}$.

Let $4\sqrt{6} = 9 + \frac{1}{x}.$

$$\therefore x = \frac{1}{4\sqrt{6}-9} = \frac{4\sqrt{6}+9}{15}.$$

Let $\frac{4\sqrt{6}+9}{15} = 1 + \frac{1}{y}.$

$$\therefore y = \frac{15}{4\sqrt{6}-6} = \frac{2\sqrt{6}+3}{2}.$$

Let $\frac{2\sqrt{6}+3}{2} = 3 + \frac{1}{z}.$

$$\therefore z = \frac{2}{2\sqrt{6}-3} = \frac{4\sqrt{6}+6}{15}.$$

Let $\frac{4\sqrt{6}+6}{15} = 1 + \frac{1}{u}.$

$$\therefore u = \frac{15}{4\sqrt{6}-9} \qquad \therefore 4\sqrt{6} = 9 + \frac{1}{1}\frac{1}{+3}\frac{1}{+1}\frac{1}{+18}.$$

$$= 4\sqrt{6}+9 \qquad \text{Quotients} = 1, 3, 1, 18.$$

$$= 18 + \frac{1}{x}. \qquad \text{Convergents} = \tfrac{9}{1}, \tfrac{1}{1}, \tfrac{3}{4}, \tfrac{4}{3}, \tfrac{75}{94}.$$

$$\therefore \text{Fourth convergent} = 9\tfrac{75}{94} = \tfrac{921}{94}.$$

2. Find continued fractions for $\frac{47}{257}$; $\frac{457}{204}$; $\frac{2065}{4626}$; $\frac{2991}{568}$; and find the third convergent to each.

$$\frac{47}{257} = \frac{1}{5}\frac{1}{+2}\frac{1}{+7}\frac{1}{+3}. \qquad \frac{457}{204} = 2 + \frac{1}{4}\frac{1}{+6}\frac{1}{+8}.$$

Quotients = 5, 2, 7. Quotients = 4, 6, 8.

Convergents = $\frac{0}{1}, \frac{1}{5}, \frac{2}{11}, \frac{15}{82}$. Convergents = $\frac{0}{1}, \frac{1}{4}, \frac{6}{25}, \frac{49}{204}$.

$\therefore$ Third convergent is $\frac{15}{82}$. $\therefore$ Third convergent = $2\frac{49}{204} = \frac{457}{204}$.

$$\frac{2065}{4626} = \frac{1}{2}\frac{1}{+4}\frac{1}{+6}\frac{1}{+8}\frac{1}{+10}. \qquad \frac{2991}{568} = 5 + \frac{1}{3}\frac{1}{+1}\frac{1}{+3}\frac{1}{+5}\frac{1}{+7}$$

Quotients = 2, 4, 6, 8. Quotients = 3, 1, 3, 5.

Convergents = $\frac{0}{1}, \frac{1}{2}, \frac{4}{9}, \frac{25}{56}$. Convergents = $\frac{0}{1}, \frac{1}{3}, \frac{1}{4}, \frac{4}{15}$.

$\therefore$ Third convergent is $\frac{25}{56}$. $\therefore$ Third convergent = $5\frac{4}{15} = \frac{79}{15}$.

3. Find continued fractions for $\sqrt{21}$; $\sqrt{22}$; $\sqrt{33}$; $\sqrt{55}$.

Let $\sqrt{21} = 4 + \frac{1}{x}$.

$$\therefore x = \frac{1}{\sqrt{21}-4}$$

$$= \frac{\sqrt{21}+4}{5}.$$

Let $\frac{\sqrt{21}+4}{5} = 1 + \frac{1}{y}$.

$$\therefore y = \frac{5}{\sqrt{21}-1}$$

$$= \frac{\sqrt{21}+1}{4}.$$

Let $\frac{\sqrt{21}+1}{4} = 1 + \frac{1}{z}$.

$$\therefore z = \frac{4}{\sqrt{21}-3}$$

$$= \frac{\sqrt{21}+3}{3}.$$

Let $\frac{\sqrt{21}+3}{3} = 2 + \frac{1}{u}$.

$$\therefore u = \frac{3}{\sqrt{21}-3}$$

$$= \frac{\sqrt{21}+3}{4}.$$

Let $\frac{\sqrt{21}+3}{4} = 1 + \frac{1}{v}$.

$$\therefore v = \frac{4}{\sqrt{21}-1}$$

$$= \frac{\sqrt{21}+1}{5}.$$

Let $\frac{\sqrt{21}+1}{5} = 1 + \frac{1}{w}$.

$$\therefore w = \frac{5}{\sqrt{21}-4}$$

$$= \sqrt{21}+4$$

$$= 8 + \frac{1}{x}.$$

$$\therefore \sqrt{21} = 4 + \frac{1}{1}\frac{1}{+1}\frac{1}{+2}\frac{1}{+1}\frac{1}{+1}\frac{1}{+8}$$

Let $\sqrt{22} = 4 + \frac{1}{x}$

$\therefore x = \frac{1}{\sqrt{22} - 4}$

$= \frac{\sqrt{22} + 4}{6}$

Let $\frac{\sqrt{22} + 4}{6} = 1 + \frac{1}{y}$

$\therefore y = \frac{6}{\sqrt{22} - 2}$

$= \frac{\sqrt{22} + 2}{3}$

Let $\frac{\sqrt{22} + 2}{3} = 2 + \frac{1}{z}$

$\therefore z = \frac{3}{\sqrt{22} - 4}$

$= \frac{\sqrt{22} + 4}{2}$

Let $\frac{\sqrt{22} + 4}{2} = 4 + \frac{1}{u}$

$\therefore u = \frac{2}{\sqrt{22} - 4}$

$= \frac{\sqrt{22} + 4}{3}$

Let $\frac{\sqrt{22} + 4}{3} = 2 + \frac{1}{v}$

$\therefore v = \frac{3}{\sqrt{22} - 2}$

$= \frac{\sqrt{22} + 2}{6}$

Let $\frac{\sqrt{22} + 2}{6} = 1 + \frac{1}{w}$

$\therefore w = \frac{6}{\sqrt{22} - 4}$

$= \sqrt{22} + 4$

$= 8 + \frac{1}{x}$

$\therefore \sqrt{22} = 4 + \frac{1}{1} + \frac{1}{2} + \frac{1}{4} + \frac{1}{2} + \frac{1}{1} + \frac{1}{8}$

Let $\sqrt{33} = 5 + \frac{1}{x}$

$\therefore x = \frac{1}{\sqrt{33} - 5}$

$= \frac{\sqrt{33} + 5}{8}$

Let $\frac{\sqrt{33} + 5}{8} = 1 + \frac{1}{y}$

$\therefore y = \frac{8}{\sqrt{33} - 3}$

$= \frac{\sqrt{33} + 3}{3}$

Let $\frac{\sqrt{33} + 3}{3} = 2 + \frac{1}{z}$

$\therefore z = \frac{3}{\sqrt{33} - 3}$

$= \frac{\sqrt{33} + 3}{8}$

Let $\frac{\sqrt{33} + 3}{8} = 1 + \frac{1}{u}$

$\therefore u = \frac{8}{\sqrt{33} - 5}$

$= \sqrt{33} + 5$

$= 10 + \frac{1}{x}$

$\therefore \sqrt{33} = 5 + \frac{1}{1} + \frac{1}{2} + \frac{1}{1} + \frac{1}{10}$

Let $\sqrt{55} = 7 + \frac{1}{x}$

$\therefore x = \frac{1}{\sqrt{55} - 7}$

$= \frac{\sqrt{55} + 7}{6}$

Let $\frac{\sqrt{55}+7}{6} = 2 + \frac{1}{y}$.

$\therefore y = \frac{6}{\sqrt{55}-5}$

$= \frac{\sqrt{55}+5}{5}$.

Let $\frac{\sqrt{55}+5}{5} = 2 + \frac{1}{z}$.

$\therefore z = \frac{5}{\sqrt{55}-5}$

$= \frac{\sqrt{55}+5}{6}$.

Let $\frac{\sqrt{55}+5}{6} = 2 + \frac{1}{u}$.

$\therefore u = \frac{6}{\sqrt{55}-7}$

$= \sqrt{55}+7$

$= 14 + \frac{1}{x}$.

$\therefore \sqrt{55} = 7 + \frac{1}{2} \quad \frac{1}{2} \quad \frac{1}{2} \quad \frac{1}{14}$.

4. Obtain convergents, with only two figures in the denominator, that approach nearest to the values of $\sqrt{10}$; $\sqrt{15}$; $\sqrt{17}$; $\sqrt{18}$; $\sqrt{20}$.

$\sqrt{10} = 3 + \frac{1}{6}$.

Quotients $= 6, 6, 6.$

Convergents $= \frac{0}{1}, \frac{1}{6}, \frac{6}{37}$.

$\therefore 3\frac{6}{37}$ is the required convergent.

$\sqrt{17} = 4 + \frac{1}{8}$.

Quotients $= 8, 8, 8.$

Convergents $= \frac{0}{1}, \frac{1}{8}, \frac{8}{65}$.

$\therefore 4\frac{8}{65}$ is the required convergent.

$\sqrt{15} = 3 + \frac{1}{1} \quad \frac{1}{6}$.

Quotients $= 1, 6, 1, 6, 1, 6.$

Convergents $= \frac{0}{1}, \frac{1}{1}, \frac{6}{7}, \frac{7}{8}, \frac{48}{55}, \frac{55}{63}$.

$\therefore 3\frac{55}{63}$ is the required convergent.

$\sqrt{18} = 4 + \frac{1}{4} \quad \frac{1}{8}$.

Quotients $= 4, 8, 4.$

Convergents $= \frac{0}{1}, \frac{1}{4}, \frac{8}{33}$.

$\therefore 4\frac{8}{33}$ is the required convergent.

$\sqrt{20} = 4 + \frac{1}{2} \quad \frac{1}{8}$.

Quotients $= 2, 8, 2, 8.$

Convergents $= \frac{0}{1}, \frac{1}{2}, \frac{8}{17}, \frac{17}{36}$.

$\therefore 4\frac{17}{36}$ is the required convergent.

5. Find the proper fraction which, if converted into a continued fraction, will have quotients 1, 7, 5, 2.

Quotients $= 1, 7, 5, 2.$

Convergents $= \frac{0}{1}, \frac{1}{1}, \frac{7}{8}, \frac{36}{41}, \frac{72}{90}$.

6. Find the next convergent when the two preceding convergents are $\frac{1}{17}$ and $\frac{1}{18}$, and the next quotient is 5.

$$\frac{u_3}{v_3} = \frac{m_3u_2 + u_1}{m_3v_2 + v_1}.$$

Put $m_3 = 5,\ u_1 = 3,\ v_1 = 17,\ u_2 = 19,\ v_2 = 89.$

Then $\frac{u_3}{v_3} = \frac{5 \times 19 + 3}{5 \times 89 + 17} = \frac{98}{462} = \frac{7}{33}.$

7. Find a series of fractions to the ratio of a yard to a *meter*, if a meter is equal to 1.0936 yards.

$\frac{10936}{10000} = 1 + \frac{9336}{10000}.$

Quotients $= 10, 1, 2, 6, 6.$

Convergents $= \frac{0}{1}, \frac{1}{10}, \frac{1}{11}, \frac{3}{32}, \frac{19}{203}, \frac{117}{1250}.$

Adding 1 to each of these fractions we have the required fractions $\frac{11}{10}, \frac{12}{11}, \frac{35}{32}, \frac{222}{203}, \frac{1367}{1250}.$

8. If the pound troy is the weight of 22.8157 cubic inches of water, and the pound avoirdupois of 27.7274 cubic inches of water, find a fraction with denominator less than 100 which shall differ from their ratio by less than 0.0001.

$$\frac{228157}{277274} = \frac{1}{1} + \frac{1}{4} + \frac{1}{1} + \frac{1}{1} + \frac{1}{1} + \frac{1}{4} + \frac{1}{1} + \frac{1}{1} + \frac{1}{82} + \frac{1}{1} + \frac{1}{5} + \frac{1}{3}.$$

Quotients $= 1, 4, 1, 1, 1, 4, 1, 1, 82.$

Convergents $= \frac{0}{1}, \frac{1}{1}, \frac{4}{5}, \frac{5}{6}, \frac{9}{11}, \frac{14}{17}, \frac{65}{79}, \frac{79}{96}, \frac{144}{175}.$

If we stop with $\frac{79}{96}$, the error is $< \frac{79}{96} - \frac{144}{175}$

or $< \frac{1}{16800}.$

$\therefore \frac{79}{96}$ is the required fraction.

9. The ratio of the diagonal to a side of a square being $\sqrt{2}$, find a fraction with denominator less than 100 which shall differ from their ratio by less than 0.0001.

$$\sqrt{2} = 1 + \frac{1}{2}.$$

Quotients $= 2, 2, 2, 2, 2, 2, 2.$

Convergents $= \frac{0}{1}, \frac{1}{2}, \frac{2}{5}, \frac{5}{12}, \frac{12}{29}, \frac{29}{70}, \frac{70}{169}.$

If we stop with $\frac{29}{70}$, the error is $< \frac{29}{70} - \frac{70}{169}$

or $< \frac{1}{11830}.$

$\therefore 1\frac{29}{70}$ is the fraction required.

10. The ratio of the circumference of a circle to its diameter being approximately the ratio of 3.14159265 : 1, find the first three convergents to this ratio, and determine to how many decimal places each may be depended upon as agreeing with the true value.

$$\frac{314159265}{100000000} = 3 + \frac{1}{7} + \frac{1}{15} + \frac{1}{1} +$$

First convergent $= \frac{22}{7} = 3.142+$

Second convergent $= \frac{333}{106} = 3.14150+$

Third convergent $= \frac{355}{113} = 3.1415920+$

11. In two scales of which the zero-points coincide the distances between consecutive divisions of the one are to the corresponding distances of the other as 1 : 1.06577. Find what division points most nearly coincide.

Let n divisions of the first scale equal as nearly as possible m divisions of the other. Then $\frac{m}{n}$ is a convergent of $\frac{1}{1.06577}$.

$$\frac{100000}{106577} = \frac{1}{1} + \frac{1}{15} + \frac{1}{4} + \frac{1}{1} + \frac{1}{8} + \frac{1}{11} + \frac{1}{2} + \frac{1}{1} + \frac{1}{1} + \frac{1}{2}.$$

Quotients $= 1, 15, 4, 1, 8, 11.$

Convergents $= \frac{0}{1}, \frac{1}{1}, \frac{15}{16}, \frac{61}{65}, \frac{76}{81}, \frac{669}{713}.$

If we stop with $\frac{76}{81}$, the error is $< \frac{669}{713} - \frac{76}{81}$

or $< \frac{1}{57753}$.

That is, division 76 of the second scale nearly coincides in the division 81 of the first scale, the distance between them being less than $\frac{1}{57753}$ of one division of the first scale.

12. Find the surd values of

$$3 + \frac{i}{1} \frac{i}{+6}; \quad \frac{i}{3} + \frac{1}{1} + \frac{i}{6}; \quad 1 + \frac{i}{2} + \frac{1}{3} + \frac{i}{4}.$$

Let $x = \frac{i}{1} \frac{i}{+6}$.

$$\therefore x = \frac{1}{1 + \frac{1}{6+x}} = \frac{6+x}{7+x}.$$

$\therefore x^2 + 6x - 6 = 0,$

$$x = \frac{-6 \pm \sqrt{60}}{2}.$$

$\therefore x = -3 + \sqrt{15}.$

$\therefore$ The required value

$= 3 - 3 + \sqrt{15}$

$= \sqrt{15}.$

Let $x = \cfrac{1}{3+\cfrac{1}{1+\cfrac{1}{6}}}$

$= \cfrac{1}{3+\cfrac{1}{1+\cfrac{1}{6+x}}}$

$= \cfrac{7+x}{27+4x}$

$\therefore 4x^2 + 26x - 7 = 0,$

$x = \cfrac{26 \pm 2\sqrt{197}}{8},$

$x = \cfrac{-13+\sqrt{197}}{4}$

$\therefore$ The required value

$= \cfrac{-13+\sqrt{197}}{4}.$

Let $x = \cfrac{1}{2+\cfrac{1}{3+\cfrac{1}{4}}}$

$= \cfrac{1}{2+\cfrac{1}{3+\cfrac{1}{4+x}}}$

$= \cfrac{13+3x}{30+7x}$

$\therefore 7x^2 + 27x - 13 = 0,$

$x = \cfrac{\sqrt{1093}-27}{14}.$

$\therefore$ The required value is

$\cfrac{\sqrt{1093}-27}{14}.$

13. Show that the ratio of the diagonal of a cube to its edge may be nearly expressed by 97 : 56. Find the greatest possible value of the error made in taking this ratio for the true ratio.

The ratio is $\sqrt{3} : 1.$

$\sqrt{3} = 1 + \cfrac{1}{1+\cfrac{1}{2}}.$

Quotients $= 1, 2, 1, 2, 1, 2, 1, 2, 1.$

Convergents $= \frac{0}{1}, \frac{1}{1}, \frac{2}{3}, \frac{3}{4}, \frac{5}{7}, \frac{11}{15}, \frac{49}{41}, \frac{41}{56}, \frac{112}{153}.$

If we stop with $\frac{41}{56}$, the error is $< \frac{1}{3136}.$

Hence $\frac{97}{56}$ differs from $\sqrt{3}$ by an amount $< \frac{1}{3136}.$

14. Find a series of fractions converging to the ratio of 5 hours 48 minutes 51 seconds to 24 hours.

5 hours 48 minutes 51 seconds = 20931 seconds.

24 hours = 86400 seconds.

$$\frac{20931}{86400} = \cfrac{1}{4+\cfrac{1}{7+\cfrac{1}{1+\cfrac{1}{4+\cfrac{1}{1+\cfrac{1}{1+\cfrac{1}{1+\cfrac{1}{1+\cfrac{1}{3+\cfrac{1}{2+\cfrac{1}{1+\cfrac{1}{2}}}}}}}}}}}}$$

Quotients $= 4, 7, 1, 4, 1, 1, 1, 1, 3, 2, 1, 2.$

Convergents $= \frac{0}{1}, \frac{1}{4}, \frac{7}{29}, \frac{8}{33}, \frac{39}{161}, \frac{47}{194}, \frac{86}{355}, \frac{133}{549}, \frac{219}{904}, \frac{790}{3261}, \frac{1799}{7426}, \frac{2589}{10687}, \frac{6977}{28800}.$

15. Find a series of fractions converging to the ratio of a cubic yard to a cubic meter, if a cubic yard is $\frac{76453}{100000}$ of a cubic meter.

$$\frac{76453}{100000} = \frac{1}{1}+\frac{1}{3}+\frac{1}{4}+\frac{1}{19}+\frac{1}{2}+\frac{1}{3}+\frac{1}{1}+\frac{1}{1}+\frac{1}{5}+\frac{1}{1}+\frac{1}{2}$$

Quotients $= 1, 3, 4, 19, 2, 3, 1, 1, 5, 1, 2.$

Convergents $= \frac{0}{1}, \frac{1}{1}, \frac{3}{4}, \frac{13}{17}, \frac{459}{327}, \frac{513}{671}, \frac{1785}{2340}, \frac{2802}{3011}, \frac{4091}{5351}, \frac{22757}{29766}, \frac{26848}{35117}, \frac{76453}{100000}.$

EXERCISE 124.

1. If 6, 7, 8, 3, 2 are the digits of a number in the scale of r, beginning from the right, write the number.

$$2r^4 + 3r^3 + 8r^2 + 7r + 6.$$

2. Find the product of 234 and 125 when r is the base.

$$234 = 2r^2 + 3r + 4,$$
$$125 = r^2 + 2r + 5.$$
$$\therefore\ 234 \times 125 = (2r^2 + 3r + 4)(r^2 + 2r + 5)$$
$$= 2r^4 + 7r^3 + 20r^2 + 23r + 20$$
$$= 27\,(20)\,(23)\,(20) \text{ in the scale of } r.$$

3. In what scale will 756 be expressed by 530?

Let r be the radix of the required scale.

Then $$756 = 5r^2 + 3r,$$
$$5r^2 + 3r - 756 = 0.$$
$$\therefore\ r = 12, \text{ or } -\tfrac{63}{5}.$$

$\therefore$ The required scale is that of 12.

4. In what scale will 540 be the square of 23?

Let r be the radix of the required scale.

Then $$540 = 5r^2 + 4r,$$
$$23 = 2r + 3.$$
$$\therefore\ 5r^2 + 4r = (2r + 3)^2,$$
$$5r^2 + 4r = 4r^2 + 12r + 9,$$
$$r^2 - 8r - 9 = 0.$$
$$\therefore\ r = -1, \text{ or } 9.$$

$\therefore$ The required scale is that of 9.

5. In what scale are 212, 1101, 1220 in arithmetical progression?

Let x = the radix.

Then $2x^2 + x + 2 + x^3 + 2x^2 + 2x = 2(x^3 + x^2 + 1)$,

$x^3 - 2x^2 - 3x = 0$,

$x^2 - 2x - 3 = 0$,

$(x - 3)(x + 1) = 0$.

$\therefore x = 3$.

6. Multiply 31.24 by 0.31 (scale of five).

$$\begin{array}{r} 31.24 \\ 0.31 \\ \hline 3124 \\ 14432 \\ \hline 20.2444 \end{array}$$

EXERCISE 125.

Find the least number by which each of the following numbers must be multiplied in order that the product may be a square number:

1. $2625 = 125 \times 21 = 5^3 \times 7 \times 3$.

Hence the required multiplier is $5 \times 7 \times 3$, or 105.

2. $3675 = 25 \times 147 = 5^2 \times 3 \times 7^2$.

Hence the required multiplier is 3.

3. $4374 = 2 \times 9 \times 243 = 2 \times 3^7$.

Hence the required multiplier is 2×3, or 6.

4. $74088 = 8 \times 27 \times 343 = 2^3 \times 3^3 \times 7^3$.

Hence the required multiplier is $2 \times 3 \times 7$, or 42.

5. If m and n are positive integers, both odd or both even, show that $m^2 - n^2$ is divisible by 4.

$m^2 - n^2 = (m + n)(m - n)$.

If m and n are both odd or both even,

$m + n$ and $m - n$ are both even.

$\therefore (m + n)(m - n)$ is divisible by 4.

6. Show that $n^2 - n$ is always even.

If n is even, n^2 and n are both even.
If n is odd, n^2 and n are both odd.
In both cases their difference is even.

7. Show that $n^3 - n$ is divisible by 6 if n is even; and by 24 if n is odd.

$$n^3 - n = n(n+1)(n-1) = (n+1)n(n-1).$$

One of the three factors must be divisible by 3.

If n is even, it is the only even factor.

But if n is odd, $n+1$ and $n-1$ are both even; and since they are successive even numbers, one of them is divisible by 4, so that their product is divisible by 8.

Hence, if n is even, 2×3, or 6, is a factor; and if n is odd, 8×3, or 24, is a factor.

EXERCISE 126.

Find the limiting values of:

1. $\dfrac{(4x^2-3)(1-2x)}{7x^3-6x+4}$ **when x becomes infinitesimal.**

$$\frac{(4x^2-3)(1-2x)}{7x^3-6x+4} = \frac{-8x^3+4x^2+6x-3}{7x^3-6x+4}.$$

Put $x = 0$; the fraction becomes $-\frac{3}{4}$.

2. $\dfrac{(x^2-5)(x^2+7)}{x^4+35}$ **when x becomes infinite.**

$$\frac{(x^2-5)(x^2+7)}{x^4+35} = \frac{\left(1-\frac{5}{x^2}\right)\left(1+\frac{7}{x^2}\right)}{1+\frac{35}{x^4}}.$$

Put $x = \infty$; the fraction becomes 1.

3. $\dfrac{(x+2)^3}{x^2+4}$ **when x becomes infinitesimal.**

Put $x = 0$; the fraction becomes $\frac{8}{4}$, or 2.

4. $\dfrac{x^2-8x+15}{x^2-7x+12}$ **when x approaches 3.**

$$\frac{x^2-8x+15}{x^2-7x+12} = \frac{(x-3)(x-5)}{(x-3)(x-4)} = \frac{x-5}{x-4}.$$

As x approaches 3, the fraction approaches $\frac{-2}{-1}$, or 2.

5. $\dfrac{x^2-9}{x^2+9x+18}$ when x approaches -3.

$$\frac{x^2-9}{x^2+9x+18}=\frac{(x+3)(x-3)}{(x+3)(x+6)}=\frac{x-3}{x+6}.$$

As x approaches -3, the fraction approaches $\dfrac{-6}{3}$, or -2.

6. $\dfrac{x(x^2+4x+3)}{x^3+3x^2+5x+3}$ when x approaches -1.

$$\frac{x(x^2+4x+3)}{x^3+3x^2+5x+3}=\frac{x(x+1)(x+3)}{(x+1)(x^2+2x+3)}=\frac{x(x+3)}{x^2+2x+3}$$

As x approaches -1, the fraction approaches $\dfrac{-2}{2}$, or -1.

7. $\dfrac{x^3+x^2-2}{x^3+2x^2-2x-1}$ when x approaches 1.

$$\frac{x^3+x^2-2}{x^3+2x^2-2x-1}=\frac{(x-1)(x^2+2x+2)}{(x-1)(x^2+3x+1)}=\frac{x^2+2x+2}{x^2+3x+1}$$

As x approaches 1, the fraction approaches $\frac{5}{5}$, or 1.

8. $\dfrac{4x+\sqrt{x-1}}{2x-\sqrt{x+1}}$ when x approaches 1.

Put $x=1$; the fraction becomes $\dfrac{4}{2-\sqrt{2}}$, or $2(2+\sqrt{2})$.

9. $\dfrac{x-1}{\sqrt{x^2-1}+\sqrt{x-1}}$ when x approaches 1.

$$\frac{x-1}{\sqrt{x^2-1}+\sqrt{x-1}}=\frac{\sqrt{x-1}\sqrt{x-1}}{\sqrt{x-1}(\sqrt{x+1}+1)}$$
$$=\frac{\sqrt{x-1}}{\sqrt{x+1}+1}.$$

Put $x=1$; the fraction becomes $\dfrac{0}{\sqrt{2}+1}$, or 0.

10. $\dfrac{x^2-4}{\sqrt{x+2}-\sqrt{3x-2}}$ when x approaches 2.

$$\frac{x^2-4}{\sqrt{x+2}-\sqrt{3x-2}}=\frac{(x^2-4)(\sqrt{x+2}+\sqrt{3x-2})}{x+2-(3x-2)}$$
$$=-\frac{(x+2)(\sqrt{x+2}+\sqrt{3x-2})}{2}.$$

Put $x=2$; the fraction becomes $\dfrac{-4(2+2)}{2}$, or -8.

11. $\dfrac{\sqrt{x-a}+\sqrt{x-\sqrt{a}}}{\sqrt{x^2-a^2}}$ **when x approaches a.**

$$\frac{\sqrt{x-a}+\sqrt{x-\sqrt{a}}}{\sqrt{x^2-a^2}}=\frac{1}{\sqrt{x+a}}+\frac{\sqrt{x}-\sqrt{a}}{\sqrt{x^2-a^2}},$$

$$=\frac{1}{\sqrt{x+a}}+\frac{(\sqrt{x}-\sqrt{a})(\sqrt{x}+\sqrt{a})}{\sqrt{x^2-a^2}(\sqrt{x}+\sqrt{a})}$$

$$=\frac{1}{\sqrt{x+a}}+\frac{\sqrt{x-a}}{\sqrt{x+a}(\sqrt{x}+\sqrt{a})}.$$

Put $x=a$; the fraction becomes $\dfrac{1}{\sqrt{2a}}$.

12. If x approaches a as a limit, and n is a positive integer, show that the limit of x^n is a^n.

Since the limit of x is a, $x=a+x'$, where x' is a variable which can be made less than any assigned number.

And $x^n=(a+x')^n=a^n+na^{n-1}x'+\dfrac{n(n-1)}{2}a^{n-2}x'^2+\ldots\ldots+x'^n$.

But as x' approaches 0, each term on the right except a^n also approaches 0; hence the sum approaches 0, as nearly as we please, since the limit of the sum is the sum of the limits. Hence, as x approaches a, x^n approaches a^n as nearly as we please. Hence a^n is the limit of x^n.

13. If x approaches a as a limit, and a is not 0, show that the limit of x^n is a^n, where n is a negative integer.

Let $n=-m$, where m is a positive integer.

Since the limit of x is a, $x=a+x'$ where x' is a variable which can be made less than any assigned number.

And $$x^{-m}=\frac{1}{x^m}=\frac{1}{(a+x')^m}$$

$$=\frac{1}{a^m+ma^{m-1}x'+\dfrac{m(m-1)}{2}a^{m-2}x'^2+\ldots\ldots+x'^m}.$$

But as x' approaches 0, all the terms of the denominator except a^m also approach 0, as nearly as we please; hence their sum approaches 0, as nearly as we please. Hence, as x approaches a, x^n approaches $\dfrac{1}{a^m}$, or a^n.

Exercise 127.

1. Find the fiftieth term of 1, 3, 8, 20, 43, ...

The series is	1	3	8	20	43	.....
First differences,		2	5	12	23	.....
Second differences,			3	7	11	.....
Third differences,				4	4	.....
Fourth differences,					0	.....

$a = 1,\ b = 2,\ c = 3,\ d = 4,\ e = 0.$

$a_{50} = a + 49b + 49 \times 24c + 49 \times 47 \times 8d$

$= 1 + 98 + 49 \times 72 + 49 \times 47 \times 32$

$= 77323.$

2. Find the sum of the series 4, 12, 29, 55, ... to 20 terms.

The series is	4	12	29	55	.....
First differences,		8	17	26	.....
Second differences.			9	9	.....
Third differences,				0	.....

$a = 4,\ b = 8,\ c = 9,\ d = 0.$

$s_{20} = 20a + 190b + 20 \times 19 \times 3c$

$= 80 + 1520 + 10260$

$= 11860.$

3. Find the twelfth term of 4, 11, 28, 55, 92, ...

The series is	4	11	28	55	92	.....
First differences,		7	17	27	37	.....
Second differences,			10	10	10	.....
Third differences,				0	0	.....

$a = 4,\ b = 7,\ c = 10,\ d = 0.$

$a_{12} = a + 11b + 55c$

$= 4 + 77 + 550$

$= 631.$

4. Find the sum of the series 43, 27, 14, 4, − 3, ... to 12 terms.

The series is	43	27	14	4	− 3	.....
First differences,		− 16	− 13	− 10	− 7	.....
Second differences,			3	3	3	.....
Third differences,				0	0	.....

$a = 43,\ b = -16,\ c = 3,\ d = 0.$

$s_{12} = 12a + 66b + 220c$

$= 516 - 1056 + 660$

$= 120.$

5. Find the seventh term of 1, 1.235, 1.471, 1.708, ...

The series is 1 1.235 1.471 1.708 .....
First differences, 0.235 0.236 0.237 .....
Second differences, 0.001 0.001 .....
Third differences, 0 .....

$$a = 1,\ b = 0.235,\ c = 0.001,\ d = 0.$$
$$a_7 = a + 6b + 15c$$
$$= 1 + 1.41 + 0.015$$
$$= 2.425.$$

6. Find the sum of the series 70, 66, 62.3, 58.9, ... to 15 terms.

The series is 70 66 62.3 58.9 .....
First differences, -4 -3.7 -3.4 .....
Second differences, 0.3 0.3 .....
Third differences, 0 .....

$$a = 70,\ b = -4,\ c = 0.3,\ d = 0.$$
$$s_{15} = 15a + 105b + 455c$$
$$= 1050 - 420 + 136.5$$
$$= 766.5.$$

7. Find the eleventh term of 343, 337, 326, 310, ...

The series is 343 337 326 310 .....
First differences, -6 -11 -16 .....
Second differences, -5 -5 .....
Third differences, 0 .....

$$a = 343,\ b = -6,\ c = -5,\ d = 0.$$
$$a_{11} = a + 10b + 45c$$
$$= 343 - 60 - 225$$
$$= 58.$$

8. Find the sum of the series 7×13, 6×11, 5×9, ... to 9 terms.

The series is 91 66 45 28 .....
First differences, -25 -21 -17 .....
Second differences, 4 4 .....
Third differences, 0 .....

$$a = 91,\ b = -25,\ c = 4,\ d = 0.$$
$$s_9 = 9a + 36b + 84c$$
$$= 819 - 900 + 336$$
$$= 255.$$

9. Find the sum of n terms of the series

$$3\times 8,\ 6\times 11,\ 9\times 14,\ 12\times 17,\ \ldots\ldots$$

The series is	24	66	126	204	.....
First differences,	42	60	78	.....	
Second differences,	18	18	.....		
Third differences,	0	.....			

$$a = 24,\ b = 42,\ c = 18,\ d = 0.$$

$$s_n = na + \frac{n(n-1)}{2}b + \frac{n(n-1)(n-2)}{6}c$$

$$= 24n + 21n(n-1) + 3n(n-1)(n-2)$$

$$= 3n^3 + 12n^2 + 9n$$

$$= 3n(n+1)(n+3).$$

10. Find the sum of n terms of the series 1, 6, 15, 28, 45 .....

The series is	1	6	15	28	45 .....
First differences,	5	9	13	17	.....
Second differences,	4	4	4	.....	
Third differences,	0	0	.....		

$$a = 1,\ b = 5,\ c = 4,\ d = 0.$$

$$s_n = na + \frac{n(n-1)}{2}b + \frac{n(n-1)(n-2)}{6}c$$

$$= n + \frac{5n(n-1)}{2} + \frac{2n(n-1)(n-2)}{3}$$

$$= \frac{4n^3 + 3n^2 - n}{6}$$

$$= \frac{n(n+1)(4n-1)}{6}.$$

11. Determine the number of shot in the side of the base of a triangular pile which contains 286 shot.

$$\frac{n(n+1)(n+2)}{6} = 286.$$

$$n(n+1)(n+2) = 1716 = 11\times 12\times 13.$$

$\therefore\ n = 11$ is one solution.

The other solutions are imaginary.

Hence there are 11 shot in the side of the base.

12. The number of shot in the upper course of a square pile is 169, and in the lower course 1089. How many shot are there in the pile?

The lower course has $\sqrt{1089}$, or 33 shot on a side.

If the pile were full, it would contain

$$\frac{n(n+1)(2n+1)}{6} = \frac{33 \times 34 \times 67}{6} = 12529.$$

The upper course has $\sqrt{169}$, or 13, shot on a side.

The next course above would have 12 shot on a side.

The number of shot lacking from the whole pile is

$$\frac{n(n+1)(2n+1)}{6} = \frac{12 \times 13 \times 25}{6} = 650 \text{ shot.}$$

Hence there are 12529 – 650, or 11879, shot in the pile.

13. Find the number of shot in a rectangular pile having 17 shot in one side of the base and 42 in the other.

$$s = \frac{n}{6}(n+1)(3n' - n + 1),$$

$$n = 17, \quad n' = 42.$$

$$\therefore s = \tfrac{17}{6} \times 18 \times 110 = 5610.$$

14. Find the number of shot in the five lower courses of a triangular pile which has 15 in one side of the base.

If the pile were complete, the number of shot would be

$$\frac{n(n+1)(n+2)}{6} = \frac{15 \times 16 \times 17}{6} = 680.$$

The number of shot in one side of the sixth course from the bottom would be 10. Hence the number in the ten upper courses is

$$\frac{10 \times 11 \times 12}{6} = 220.$$

Hence there are 680 – 220, or 460, shot in the five lower courses.

15. The number of shot in a triangular pile is to the number in a square pile, of the same number of courses, as 22 : 41. Find the number of shot in each pile.

$$\frac{n(n+1)(n+2)}{6} : \frac{n(n+1)(2n+1)}{6} = 22 : 41.$$

$$\therefore n + 2 : 2n + 1 = 22 : 41.$$

$$\therefore n = 20,$$

$$\frac{n(n+1)(n+2)}{6} = 1540,$$

$$\frac{n(n+1)(2n+1)}{6} = 2870.$$

There are 1540 shot in the triangular pile, and 2870 in the square pile.

16. Find the number of shot required to complete a rectangular pile having 15 and 6 shot, respectively, in the sides of its upper course.

The next course above would have 14 and 5 shot in its sides.

Hence the number of shot required to complete the pile is:

$$s = \frac{n}{6}(n+1)(3n' - n + 1)$$

$$= \tfrac{1}{6} \times 6 \times 38 = 190.$$

17. How many shot must there be in the lowest course of a triangular pile that 10 courses of the pile, beginning at the base, may contain 37,020 shot?

Let n = the number of shot in one side of the lowest course.

Then $n - 10$ = the number of shot in one side of the eleventh course.

The number of shot in the complete pile is

$$\frac{n(n+1)(n+2)}{6}$$

The number in the courses above the tenth is

$$\frac{(n-10)(n-9)(n-8)}{6}$$

$$\therefore \frac{n(n+1)(n+2)}{6} - \frac{(n-10)(n-9)(n-8)}{6} = 37020.$$

$$\frac{30n^2 - 240n + 720}{6} = 37020,$$

$$n^2 - 8n + 24 = 7404,$$

$$n^2 - 8n = 7380.$$

$$\therefore n = 90.$$

Hence there are 90 shot on a side in the lowest course, and $\frac{90}{2}(90 + 1)$, or 4095, shot in the lowest course.

18. Find the number of shot in a complete retangular pile of 15 courses which has 20 shot in the longest side of its base.

$$s = \frac{n}{6}(n+1)(3n' - n + 1),$$

$$n = 15, \qquad n' = 20.$$

$$\therefore s = \tfrac{15}{6} \times 16 \times 46 = 1840.$$

There are 1840 shot in the pile.

19. Find the number of shot in the bottom of a square pile which contains 2600 more shot than a triangular pile of the same number of courses.

Let n = number of courses in each pile.

Then $\frac{n(n+1)(n+2)}{6}$ = number of shot in triangular pile.

$\frac{n(n+1)(2n+1)}{6}$ = number of shot in square pile.

$$\therefore \frac{n(n+1)(2n+1)}{6} - \frac{n(n+1)(n+2)}{6} = 2600.$$

$$\therefore (n-1)n(n+1) = 15600,$$

$$(n-1)n(n+1) = 24 \times 25 \times 26.$$

$\therefore n = 25$ is one solution.

The other two solutions are imaginary.

$\therefore$ The number of shot in the bottom row of the square pile is 25.

20. Find the number of shot in a complete square pile in which the number of shot in the base and the number in the fifth course above differ by 225.

Let n = number of shot in the side of the bottom course.

Then $n-5$ = number of shot in the side of the fifth course above.

n^2 = number of shot in bottom course.

$(n-5)^2$ = number of shot in fifth course above.

$$\therefore n^2 - (n-5)^2 = 225,$$

$$10n - 25 = 225,$$

$$n = 25.$$

Also $$s = \frac{n(n+1)(2n+1)}{6}$$

$$= \frac{25 \times 26 \times 51}{6}$$

$$= 5525.$$

There are 5525 shot in the pile.

21. Find the number of shot in a rectangular pile which has 600 in the lowest course and 11 in the top row.

$$nn' = 600.$$

$$n' - n + 1 = p = 11.$$

$$\therefore n = 20,$$

$$n' = 30.$$

Also $$s = \frac{n}{6}(n+1)(3n' - n + 1)$$

$$= \tfrac{20}{6} \times 21 \times 71 = 4970.$$

There are 4970 shot in the pile.

Exercise 128.

Sum to n terms, and to infinity, the following series:

1. $\frac{1}{1\times4}, \frac{1}{2\times5}, \frac{1}{3\times6}, \ldots\ldots$

The general term is $\frac{1}{n(n+3)} = \frac{1}{3}\left(\frac{1}{n} - \frac{1}{n+3}\right)$.

Hence the series may be written

$$\frac{1}{3}\left(1 - \frac{1}{4}\right), \frac{1}{3}\left(\frac{1}{2} - \frac{1}{5}\right), \frac{1}{3}\left(\frac{1}{3} - \frac{1}{6}\right), \frac{1}{3}\left(\frac{1}{4} - \frac{1}{7}\right), \ldots\ldots, \frac{1}{3}\left(\frac{1}{n} - \frac{1}{n+3}\right)\ldots\ldots$$

The sum to n terms is therefore

$$\frac{1}{3}\left(1 + \frac{1}{2} + \frac{1}{3}\right) - \frac{1}{3}\left(\frac{1}{n+1} + \frac{1}{n+2} + \frac{1}{n+3}\right),$$

and the sum to infinity is

$$\tfrac{1}{3}(1 + \tfrac{1}{2} + \tfrac{1}{3}) = \tfrac{11}{18}.$$

2. $\frac{1}{1\times3\times5}, \frac{1}{2\times4\times6}, \frac{1}{3\times5\times7}, \ldots\ldots$

The general term is $\frac{1}{n(n+2)(n+4)} = \frac{1}{8}\left(\frac{1}{n} - \frac{2}{n+2} + \frac{1}{n+4}\right)$.

Hence the series may be written

$$\tfrac{1}{8}(1 - \tfrac{2}{3} + \tfrac{1}{5}), \tfrac{1}{8}(\tfrac{1}{2} - \tfrac{2}{4} + \tfrac{1}{6}), \tfrac{1}{8}(\tfrac{1}{3} - \tfrac{2}{5} + \tfrac{1}{7}), \tfrac{1}{8}(\tfrac{1}{4} - \tfrac{2}{6} + \tfrac{1}{8}), \ldots\ldots$$

$$\frac{1}{8}\left(\frac{1}{n-2} - \frac{2}{n} + \frac{1}{n+2}\right), \frac{1}{8}\left(\frac{1}{n-1} - \frac{2}{n+1} + \frac{1}{n+3}\right),$$

$$\frac{1}{8}\left(\frac{1}{n} - \frac{2}{n+2} + \frac{1}{n+4}\right), \ldots\ldots$$

The sum to n terms is

$$\frac{1}{8}\left(1 + \frac{1}{2} - \frac{1}{3} - \frac{1}{4}\right) + \frac{1}{8}\left(-\frac{1}{n+1} - \frac{1}{n+2} + \frac{1}{n+3} + \frac{1}{n+4}\right),$$

and the sum to infinity is

$$\tfrac{1}{8}(1 + \tfrac{1}{2} - \tfrac{1}{3} - \tfrac{1}{4}) = \tfrac{11}{96}.$$

3. $\frac{1}{2\times4\times6}, \frac{1}{4\times6\times8}, \frac{1}{6\times8\times10}, \ldots\ldots$

The general term is $\frac{1}{2n(2n+2)(2n+4)} = \frac{1}{16}\left(\frac{1}{n} - \frac{2}{n+1} + \frac{1}{n+2}\right)$.

Hence the series may be written

$\frac{1}{16}(1-\frac{2}{2}+\frac{1}{3}),\ \frac{1}{16}(\frac{1}{2}-\frac{2}{3}+\frac{1}{4}),\ \frac{1}{16}(\frac{1}{3}-\frac{2}{4}+\frac{1}{5}),\ \frac{1}{16}(\frac{1}{4}-\frac{2}{5}+\frac{1}{6})$.....

$$\frac{1}{16}\left(\frac{1}{n-2}-\frac{2}{n-1}+\frac{1}{n}\right),\ \frac{1}{16}\left(\frac{1}{n-1}-\frac{2}{n}+\frac{1}{n+1}\right),$$

$$\frac{1}{16}\left(\frac{1}{n}-\frac{2}{n+1}+\frac{1}{n+2}\right),\ \text{.....}$$

The sum to n term is

$$\frac{1}{16}\left(1-\frac{2}{2}+\frac{1}{2}\right)+\frac{1}{16}\left(-\frac{1}{n+1}+\frac{1}{n+2}\right).$$

and the sum to infinity is

$$\tfrac{1}{16}(1-\tfrac{2}{2}+\tfrac{1}{3})=\tfrac{1}{32}.$$

4. $\frac{4}{2\times3\times4},\ \frac{7}{3\times4\times5},\ \frac{10}{4\times5\times6},$ .....

The general term is $\frac{3n+1}{(n+1)(n+2)(n+3)}=-\frac{1}{n+1}+\frac{5}{n+2}-\frac{4}{n+3}.$

Hence the series may be written

$-\frac{1}{2}+\frac{5}{3}-\frac{4}{4},\ -\frac{1}{3}+\frac{5}{4}-\frac{4}{5},\ -\frac{1}{4}+\frac{5}{5}-\frac{4}{6},\ -\frac{1}{5}+\frac{5}{6}-\frac{4}{7},$ .....

$$-\frac{1}{n-1}+\frac{5}{n}-\frac{4}{n+1},\ -\frac{1}{n}+\frac{5}{n+1}-\frac{4}{n+2},$$

$$-\frac{1}{n+1}+\frac{5}{n+2}-\frac{4}{n+3},\ \text{.....}$$

The sum to n terms is

$$-\frac{1}{2}+\frac{4}{3}+\frac{1}{n+2}-\frac{4}{n+3},$$

and the sum to infinity is

$$-\tfrac{1}{2}+\tfrac{4}{3}=\tfrac{5}{6}.$$

5. $\frac{1}{1\times2\times3},\ \frac{1}{2\times3\times4},\ \frac{1}{3\times4\times5},$ .....

The general term is

$$\frac{1}{n(n+1)(n+2)}=\frac{1}{2}\left(\frac{1}{n}-\frac{2}{n+1}+\frac{1}{n+2}\right).$$

Hence the series may be written

$\frac{1}{2}(1-\frac{2}{2}+\frac{1}{3}),\ \frac{1}{2}(\frac{1}{2}-\frac{2}{3}+\frac{1}{4}),\ \frac{1}{2}(\frac{1}{3}-\frac{2}{4}+\frac{1}{5}),\ \frac{1}{2}(\frac{1}{4}-\frac{2}{5}+\frac{1}{6}),$ .....

$$\frac{1}{2}\left(\frac{1}{n-2}-\frac{2}{n-1}+\frac{1}{n}\right),\ \frac{1}{2}\left(\frac{1}{n-1}-\frac{2}{n}+\frac{1}{n+1}\right),$$

$$\frac{1}{2}\left(\frac{1}{n}-\frac{2}{n+1}+\frac{1}{n+2}\right),\ \text{.....}$$

The sum to n terms is

$$\frac{1}{2}\left(1-\frac{2}{2}+\frac{1}{2}\right)+\frac{1}{2}\left(-\frac{1}{n+1}+\frac{1}{n+2}\right),$$

and the sum to infinity is $\frac{1}{2}(1-\frac{2}{2}+\frac{1}{2})=\frac{1}{4}$.

Exercise 129.

Revert:

1. $y = x-2x^2+3x^3-4x^4+\cdots\cdots$

Here $a=1,\ b=-2,\ c=3,\ d=-4.$

$\therefore A=1,\ B=-2,\ C=5,\ D=14.$

$\therefore\ x=y+2y^2+5y^3+14y^4+\cdots\cdots$

2. $y=x-\frac{x^3}{3}+\frac{x^5}{5}-\frac{x^7}{7}+\cdots\cdots$

Here $a=1,\ b=0,\ c=-\frac{1}{3},\ d=0,\ e=\frac{1}{5}.$

$\therefore A=1,\ B=0,\ C=\frac{1}{3},\quad D=0,\ E=\frac{2}{15}.$

$$\therefore\ x=y+\frac{y^3}{3}+\frac{2y^5}{15}+\cdots\cdots$$

3. $y=x+\frac{x^2}{1\cdot 2}+\frac{x^3}{2\cdot 3}+\frac{x^4}{3\cdot 4}+\cdots\cdots$

Here $a=1,\ b=\frac{1}{2},\quad c=\frac{1}{6},\ d=\frac{1}{12}.$

$\therefore A=1,\ B=-\frac{1}{2},\ C=\frac{1}{3},\ D=-\frac{7}{24}.$

$$\therefore\ x=y-\frac{y^2}{2}+\frac{y^3}{3}-\frac{7y^4}{24}+\cdots\cdots$$

Exercise 130.

Find the identical relation and generating function of:

1. $1+2x+7x^2+23x^3+76x^4+\cdots\cdots$

Notice that
$$7=3\times 2+1,$$
$$23=3\times 7+2,$$
$$76=3\times 23+7.$$

$\therefore$ The identical relation is $u_n=3xu_{n-1}+x^2u_{n-2}$.

But
$$\begin{aligned} s &= 1+2x+7x^2+23x^3+76x^4+\cdots\cdots \\ -3xs &= \quad -3x-6x^2-21x^3-69x^4-\cdots\cdots \\ -x^2s &= \qquad\quad -x^2-2x^3-7x^4-\cdots\cdots \end{aligned}$$

$$\therefore (1-3x-x^2)s=1-x$$

$$\therefore\ s=\frac{1-x}{1-3x-x^2}.$$

2. $3+2x+3x^2+7x^3+18x^4+\cdots\cdots$

Notice that $3=3\times 2-3$

$7=3\times 3-2$

$18=3\times 7-3$

$\therefore$ The identical relation is $u_n=3xu_{n-1}-x^2u_{n-2}$.

But
$$\begin{aligned} s &= 3+2x+3x^2+7x^3+18x^4+\cdots\cdots \\ -3xs &= \quad -9x-6x^2-9x^3-21x^4-\cdots\cdots \\ x^2s &= \qquad\quad 3x^2+2x^3+\ 3x^4+\cdots\cdots \end{aligned}$$

$$\therefore (1-3x+x^2)s=3-7x$$

$$\therefore s=\frac{3-7x}{1-3x+x^2}$$

Find the generating function and the general term of:

3. $2+3x+5x^2+9x^3+17x^4+33x^5+\cdots\cdots$

Suppose $u_n=pxu_{n-1}+qx^2u_{n-2}$.

Then
$$5=3p+2q$$
$$9=5p+3q$$
$$\therefore p=3,\ q=-2$$

$\therefore$ The identical relation is $u_n=3xu_{n-1}-2x^2u_{n-2}$.

$$\begin{aligned} s &= 2+3x+5x^2+\ 9x^3+17x^4+33x^5+\cdots\cdots \\ -3xs &= \quad -6x-9x^2-15x^3-27x^4-51x^5-\cdots\cdots \\ 2x^2s &= \qquad\quad 4x^2+\ 6x^3+10x^4+18x^5+\cdots\cdots \end{aligned}$$

$$\therefore (1-3x+2x^2)s=2-3x$$

$$\therefore s=\frac{2-3x}{1-3x+2x^2}$$

$$=\frac{1}{1-2x}+\frac{1}{1-x}$$

$$\frac{1}{1-2x}=1+2x+2^2x^2+\cdots\cdots+2^nx^n+\cdots\cdots$$

$$\frac{1}{1-x}=1+x+x^2+\cdots\cdots+x^n+\cdots\cdots$$

$\therefore s=1+(2+1)x+(2^2+1)x^2+\cdots\cdots+(2^n+1)x^n+\cdots\cdots$

$\therefore$ The general term is $(2^n+1)x^n$.

4. $7-6x+9x^2+27x^3+54x^4+189x^5+\cdots\cdots$

Suppose $u_n=pxu_{n-1}+qx^2u_{n-2}+rx^3u_{n-3}$

Then
$$27=\ 9p-\ 6q+7r$$
$$54=27p+\ 9q-6r$$
$$189=54p+27q+9q$$
$$\therefore p=2,\ q=2,\ r=3$$

∴ The identical relation is

$$u_n = 2xu_{n-1} + 2x^2u_{n-2} + 3x^3u_{n-3}$$

$$\begin{aligned} s &= 7 - 6x + 9x^2 + 27x^3 + 54x^4 + 189x^5 + \cdots\cdots \\ -2xs &= -14x + 12x^2 - 18x^3 - 54x^4 - 108x^5 - \cdots\cdots \\ -2x^2s &= \quad -14x^2 + 12x^3 - 18x^4 - 54x^5 - \cdots\cdots \\ -3x^3s &= \quad\quad -21x^3 + 18x^4 - 27x^5 - \cdots\cdots \end{aligned}$$

$$(1 - 2x - 2x^2 - 3x^3)s = 7 - 20x + 7x^2$$

$$\therefore s = \frac{7 - 20x + 7x^2}{1 - 2x - 2x^2 - 3x^3}$$

$$\frac{7 - 20x + 7x^2}{1 - 2x - 2x^2 - 3x^3} = \frac{7 - 20x + 7x^2}{(1 - 3x)(1 + x + x^2)}$$

$$= \frac{10}{13(1 - 3x)} + \frac{27(3 - x)}{13(1 + x + x^2)}$$

But $$\frac{1}{1 - 3x} = 1 + 3x + 3^2x^2 + 3^3x^3 + \cdots\cdots + 3^nx^n + \cdots\cdots$$

$$\frac{3 - x}{1 + x + x^2} = \frac{(1 - x)(3 - x)}{(1 + x + x^2)(1 - x)} = \frac{3 - 4x + x^2}{1 - x^3}$$

and $$\frac{1}{1 - x^3} = 1 + x^3 + x^6 + x^9 + \cdots\cdots + x^{3n} + \cdots\cdots$$

$$\therefore \frac{3 - x}{1 - x^3} = 3 - 4x + x^2 + 3x^3 - 4x^4 + x^5 + 3x^6 - 4x^7 + x^8 + \cdots\cdots$$

$$\therefore \frac{7 - 20x + 7x^2}{1 - 2x - 2x^2 - 3x^3} = \tfrac{10}{13}(1 + 3x + 3^2x^2 + 3^3x^3 + \cdots\cdots)$$

$$+ \tfrac{27}{13}(3 - 4x + x^2 + 3x^3 - 4x^4 + x^5 + \cdots\cdots)$$

$$\therefore u_{3n} = \tfrac{10}{13}3^{3n-1} + \tfrac{27}{13} = \tfrac{27}{13}(10 \times 3^{3n-4} + 1)$$

$$u_{3n+1} = \tfrac{10}{13}3^{3n} + \tfrac{27}{13} \times 3 = \tfrac{81}{13}(10 \times 3^{3n-4} + 1)$$

$$u_{3n+2} = \tfrac{10}{13}3^{3n+1} + \tfrac{27}{13} \times (-4) = \tfrac{27}{13}(10 \times 3^{3n-2} - 4)$$

5. $1 + 5x + 9x^2 + 13x^3 + 17x^4 + 21x^5 + \cdots\cdots$

Suppose $u_n = pxu_{n-1} + qx^2u_{n-2}$

Then $9 = 5p + q$

$13 = 9p + 5p$

$\therefore p = 2,\ q = -1$

∴ The identical relation is $u_n = 2u_{n-1} - u_{n-2}$.

$$\begin{aligned} s &= 1 + 5x + 9x^2 + 13x^3 + 17x^4 + \cdots\cdots \\ -2xs &= -2x - 10x^2 - 18x^3 - 26x^4 + \cdots\cdots \\ x^2s &= \quad\quad x^2 + 5x^3 + 9x^4 + \cdots\cdots \end{aligned}$$

$$(1 - 2x + x^2)s = 1 + 3x$$

$$s = \frac{1+3x}{1-2x+x^2} = \frac{1+3x}{(1-x)^2}$$

Also $1+5x+9x^2+13x^3+\cdots\cdots$

$=1+(4+1)x+(2\times4+1)x^2+(3\times4+1)x^3+\cdots\cdots+(4n+1)x^n+\cdots\cdots$

$\therefore$ The general term is $(4n+1)x_n$.

6. $1+x-7x^3+33x^4-130x^5+499x^6+\cdots\cdots$

Suppose $u_n = pu_{n-1}+qu_{n-2}+ru_{n-3}$.

Then
$$-7 = q+r$$
$$33 = -7p+r$$
$$-130 = 33p-7q$$
$$\therefore p=-5,\ q=-5,\ r=-2$$

The identical relation is $u_n = -5xu_{n-1}-5x^2u_{n-2}-2x^3u_{n-3}$.

$$\begin{aligned} s &= 1+x-7x^3+33x^4-130x^5+499x^6+\cdots\cdots \\ 5xs &= 5x+5x^2-35x^4+165x^5-650x^6-\cdots\cdots \\ 5x^2s &= 5x^2+5x^3-35x^5+165x^6+\cdots\cdots \\ 2x^3s &= 2x^3+2x^4-14x^6 \end{aligned}$$

$(1+5x+5x^2+2x^3)s = 1+6x+10x^2$

$$\therefore s = \frac{1+6x+10x^2}{1+5x+5x^2+2x^3}$$

7. $3+6x+14x^2+36x^3+98x^4+276x^5+\cdots\cdots$

Suppose $u_n = pu_{n-1}+qu_{n-2}+ru_{n-3}$

Then
$$36 = 14p+6q+3r$$
$$98 = 36p+14q+6r$$
$$276 = 98p+36q+14r$$
$$\therefore p=6,\ r=-11,\ q=6$$

$\therefore$ The identical relation is

$$u_n = 6u_{n-1}-11u_{n-2}+6u_{n-3}$$

$$\begin{aligned} s &= 3+6x+14x^2+36x^3+98x^4+276x^5+\cdots\cdots \\ -6xs &= -18x-36x^2-84x^3-216x^4-588x^5-\cdots\cdots \\ +11x^2s &= 33x^2+66x^3+154x^4+396x^5+\cdots\cdots \\ -6x^3s &= -18x^3-36x^4-84x^5 \end{aligned}$$

$(1-6x+11x^2-6x^3)s = 3-12x+11x^2$

$$\therefore s = \frac{3-12x+11x^2}{1-6x+11x^2-6x^3} = \frac{3-12x+11x^2}{(1-x)(1-2x)(1-3x)}$$
$$= \frac{1}{1-x}+\frac{1}{1-2x}+\frac{1}{1-3x}$$

But $$\frac{1}{1-x} = 1 + x + x^2 + x^3 + \ldots\ldots + x^n + \ldots\ldots$$

$$\frac{1}{1-2x} = 1 + 2x + 2^2x^2 + 2^3x^3 + \ldots\ldots + 2^nx^n + \ldots\ldots$$

$$\frac{1}{1-3x} = 1 + 3x + 3^2x^2 + 3^3x^3 + \ldots\ldots + 3^nx^n + \ldots\ldots$$

$$\therefore s = 3 + (1 + 2 + 3)x + (1 + 2^2 + 3^2)x^2 + \ldots\ldots + (1 + 2^n + 3^n)x^n + \ldots\ldots$$

$\therefore$ The general term is $(1 + 2^n + 3^n)x^n$.

Find the sum of n terms of:

8. $2 + 5 + 10 + 17 + 26 + 37 + 50 + \ldots\ldots$

First differences	3	5	7	9	11	.....
Second differences,	2	2	2	2	.....	
Third differences,	0	0	0	.....		

$$\therefore a = 2,\ b = 3,\ c = 2,\ d = 0$$

$$\therefore s_n = na + \frac{n(n-1)}{2}b + \frac{n(n-1)(n-2)}{6}$$

$$= 2n + \frac{3(n^2-n)}{2} + \frac{n(n-1)(n-2)}{3}$$

$$= \frac{2n^3 + 3n^2 + 7n}{6}$$

9. $1^3 + 2^3 + 3^3 + 4^3 + 5^3 + \ldots\ldots$

$$= 1 + 8 + 27 + 64 + 125 + \ldots\ldots$$

First differences,	7	19	37	61	91	.....
Second differences,	12	18	29	30	.....	
Third differences,	6	6	6			
Fourth differences,	0	0				

$$\therefore a = 1,\ b = 7,\ c = 12,\ d = 6,\ e = 0$$

$$\therefore Sn = n + \frac{7n(n-1)}{2} + \frac{12n(n-1)(n-2)}{6} + \frac{6n(n-1)(n-2)(n-3)}{24}$$

$$= \frac{6n^4 + 12n^3 + 6n^2}{24}$$

$$= \frac{n^2(n+1)^2}{4}$$

EXERCISE 131.

Determine whether the following infinite series are convergent or divergent:

1. $1+\frac{1}{2}+\frac{1}{3^2}+\frac{1}{4^3}+\cdots\cdots$

The sum of all terms after the second is $\frac{1}{3^2}+\frac{1}{4^3}+\frac{1}{5^4}+\cdots\cdots$

But this is less than $\frac{1}{3^2}+\frac{1}{4^2}+\frac{1}{5^2}+\cdots\cdots$

But this has been shown to be a convergent series.
Hence the given series is convergent.

2. $1+\frac{1^2}{\lfloor 2}+\frac{2^3}{\lfloor 3}+\frac{3^4}{\lfloor 4}+\cdots\cdots$

$$n_n=\frac{(n-1)^n}{\lfloor n}=\frac{n-1}{n}\cdot\frac{(n-1)^{n-1}}{\lfloor n-1}.$$

But $(n-1)^{n-1}>\lfloor n-1.$

For $(n-1)^{n-1}=(n-1)(n-1)\cdots\cdots(n-1 \text{ factors}),$

and $\lfloor n-1=(n-1)(n-2)\cdots\cdots 1.$

Hence $\frac{(n-1)^{n-1}}{\lfloor n-1}>1.$

Also $\frac{n-1}{n}=1-\frac{1}{n}.$

As n is indefinitely increased, $1-\frac{1}{n}$ approaches 1 as a limit.

Hence the limit of n_n, as n is indefinitely increased, is not 0, but is greater than 1. Therefore the given series is divergent.

3. $\frac{2}{1^2}+\frac{3}{2^2}+\frac{4}{3^2}+\frac{5}{4^2}+\cdots\cdots$

$$=\frac{1}{1^2}+\frac{2}{2^2}+\frac{3}{3^2}+\frac{4}{4^2}+\cdots\cdots+1+\frac{1}{1^2}+\frac{1}{2^2}+\frac{1}{3^2}+\frac{1}{4^2}+\cdots\cdots$$

But $\frac{1}{1^2}+\frac{2}{2^2}+\frac{3}{3^2}+\frac{4}{4^2}+\cdots\cdots=1+\frac{1}{2}+\frac{1}{3}+\frac{1}{4}+\cdots\cdots$

And this has been shown to be a divergent series.
Hence the given series is also divergent.

4. $\frac{1}{1^m}+\frac{1^m}{2^m}+\frac{2^m}{3^m}+\frac{3^m}{4^m}+\cdots\cdots$

$$n^n=\left(\frac{n-1}{n}\right)^m=\left(1-\frac{1}{n}\right)^m.$$

$\therefore$ The limit of n_n is 1. Hence the series is divergent.

5. Show that the infinite series

$$\frac{1}{1\times 2}-\frac{1}{2\times 2^2}+\frac{1}{3\times 2^3}-\frac{1}{4\times 2^4}+\cdots\cdots$$

is convergent, and find its sum.

The series may be obtained from the series

$$\log_e(1+y)=y-\frac{y^2}{2}+\frac{y^3}{3}-\frac{y^4}{4}+\cdots\cdots$$

by putting $y=\frac{1}{2}$

$$\therefore \log_e 2=\frac{1}{1\times 2}-\frac{1}{2.2^2}+\frac{1}{3\times 2^3}-\frac{1}{4\times 2^4}+\cdots\cdots$$

The series is convergent. For the terms are alternately positive and negative and are continually decreasing, and the limit of the nth term is 0.

6. Find the limit which $\sqrt[n]{1+nx}$ approaches as n approaches 0 as a limit.

Let $$m=\frac{1}{n}$$

Then $$\sqrt[n]{1+nx}=(1+nx)^{\frac{1}{n}}$$
$$=\left(1+\frac{x}{m}\right)^m$$

As n approaches 0, m increases indefinitely.

But $$\lim_{m \text{ infinite}}\left(1+\frac{x}{m}\right)^m=e^x$$

$$\therefore \lim_{n=0}\sqrt[n]{1+nx}=e^x$$

7. Prove that $\frac{1}{e}=2\left(\frac{1}{\lfloor 3}+\frac{2}{\lfloor 5}+\frac{3}{\lfloor 7}+\cdots\cdots\right)$

Consider the series

$$e^x=1+x+\frac{x^2}{\lfloor 2}+\frac{x^3}{\lfloor 3}+\cdots\cdots$$

put $$x=-1$$

$$e^{-1}=1-1+\frac{1}{\lfloor 2}-\frac{1}{\lfloor 3}+\cdots\cdots$$

$$\therefore \frac{1}{e} = \frac{1}{\lfloor 2} - \frac{1}{\lfloor 3} + \frac{1}{\lfloor 4} - \frac{1}{\lfloor 5} + \frac{1}{\lfloor 6} - \frac{1}{\lfloor 7} + \cdots\cdots$$

$$= \frac{3}{\lfloor 3} - \frac{1}{\lfloor 3} + \frac{5}{\lfloor 5} - \frac{1}{\lfloor 5} + \frac{7}{\lfloor 7} - \frac{1}{\lfloor 7} + \cdots\cdots$$

$$= \frac{2}{\lfloor 3} + \frac{4}{\lfloor 5} + \frac{6}{\lfloor 7} + \cdots\cdots$$

$$= 2\left(\frac{1}{\lfloor 3} + \frac{2}{\lfloor 5} + \frac{3}{\lfloor 7} + \cdots\cdots\right)$$

8. Calculate to four places, $\log_e 4$, $\log_e 5$, $\log_e 6$, $\log_e 7$.

$$\log_e 4 = 2\log_e 2 = 1.3863$$

$$\log_e 5 = \log_e 4 + \frac{2}{9} + \frac{2}{3 \times 9^3} + \frac{2}{5 \times 9^5} + \cdots\cdots$$

$$= 1.6094$$

$$\log_e 6 = \log_e 5 + \frac{2}{11} + \frac{2}{3 \times 11^3} + \frac{2}{5 \times 11^5} + \cdots\cdots$$

$$= 1.7918 = \log_e 2 + \log_e 3$$

$$\log_e 7 = \log_e 6 + \frac{2}{13} + \frac{2}{3 \times 13^3} + \frac{2}{5 \times 13^5}$$

$$= 1.9459$$

9. Find to four places the moduli of the systems of which the bases are: 2, 3, 4, 5, 6, 7.

$$\log_2 e = \frac{1}{\log_e 2} = \frac{1}{0.693147} = 1.4427$$

$$\log_3 e = \frac{1}{\log_e 3} = \frac{1}{1.098612} = 0.9102$$

$$\log_4 e = \frac{1}{\log_e 4} = \frac{1}{2\log_e 2} = 0.7213$$

$$\log_5 e = \frac{1}{\log_e 5} = \frac{1}{1.609432} = 0.6213$$

$$\log_6 e = \frac{1}{\log_e 6} = \frac{1}{1.791759} = 0.5581$$

$$\log_7 e = \frac{1}{\log_e 7} = \frac{1}{1.9459} = 0.5139$$

10. Show that

$$\log_e\left(\frac{8}{e}\right) = \frac{5}{1\times2\times3} + \frac{7}{3\times4\times5} + \frac{9}{5\times6\times7} + \cdots\cdots$$

$$\frac{5}{1\times2\times3} + \frac{7}{3\times4\times5} + \frac{9}{5\times6\times7} + \cdots\cdots$$

$$= \frac{3+2}{1\times2\times3} + \frac{5+2}{3\times4\times5} + \frac{7+2}{5\times6\times7} + \cdots\cdots$$

$$= \frac{1}{1\times2} + \frac{1}{3\times4} + \frac{1}{5\times6} + \cdots\cdots$$

$$+ 2\left(\frac{1}{1\times2\times3} + \frac{1}{3\times4\times5} + \frac{1}{5\times6\times7} + \cdots\cdots\right)$$

$$= (1-\tfrac{1}{2}) + (\tfrac{1}{3}-\tfrac{1}{4}) + (\tfrac{1}{5}-\tfrac{1}{6}) + \cdots\cdots$$

$$+ 2\left(\frac{1}{1\times2\times3} + \frac{1}{3\times4\times5} + \frac{1}{5\times6\times7} + \cdots\cdots\right)$$

$$= \log 2 + 2\left(\frac{3-2}{1\times2\times3} + \frac{5-4}{3\times4\times5} + \frac{7-6}{5\times6\times7} + \cdots\cdots\right)$$

$$= \log 2 + 2\left(\frac{1}{1\times2} + \frac{1}{3\times4} + \frac{1}{5\times6} + \cdots\cdots\right)$$

$$- 2\left(\frac{1}{1\times3} + \frac{1}{3\times5} + \frac{1}{5\times7} + \cdots\cdots\right)$$

$$= 3\log 2 - \left(\frac{2}{1\times3} + \frac{2}{3\times5} + \frac{2}{5\times7} + \cdots\cdots\right)$$

$$= \log 8 - [(1-\tfrac{1}{3}) + (\tfrac{1}{3}-\tfrac{1}{5}) + (\tfrac{1}{5}-\tfrac{1}{7}) + \cdots\cdots]$$

$$= \log 8 - 1$$

$$= \log 8 - \log e$$

$$= \log\left(\frac{8}{e}\right)$$

11. Show that

$$\log_e a - \log_e b = \frac{a-b}{a} + \frac{1}{2}\left(\frac{a-b}{a}\right)^2 + \frac{1}{3}\left(\frac{a-b}{a}\right)^3 + \cdots\cdots$$

$$\log_e a - \log_e b = \log\frac{a}{b} = -\log\frac{b}{a} = -\log\left[1-\left(1-\frac{b}{a}\right)\right]$$

$$= -\log\left(1+\frac{b-a}{a}\right)$$

But $$\log\left(1+\frac{b-a}{a}\right) = \frac{b-a}{a} - \frac{1}{2}\left(\frac{b-a}{a}\right)^2 + \frac{1}{3}\left(\frac{b-a}{a}\right)^3 + \cdots\cdots$$

$$\therefore \log_e a - \log_e b = \frac{a-b}{a} + \frac{1}{2}\left(\frac{a-b}{a}\right)^2 + \frac{1}{3}\left(\frac{a-b}{a}\right)^3 + \cdots\cdots$$

12. Show that, if x is positive,

$$x+\frac{1}{x}-\frac{1}{2}\left(x^2+\frac{1}{x^2}\right)+\frac{1}{3}\left(x^3+\frac{1}{x^3}\right)-\cdots\cdots=\log_e\left(2+x+\frac{1}{x}\right).$$

$$\log\left(2+x+\frac{1}{x}\right)=\log\frac{x^2+2x+1}{x}=\log\left[(x+1)\frac{x+1}{x}\right]$$

$$=\log(x+1)+\log\left(1+\frac{1}{x}\right)$$

But $\log(1+x)=x-\frac{x^2}{2}+\frac{x^3}{3}-\frac{x^4}{4}+\cdots\cdots$

and $\log\left(1+\frac{1}{x}\right)=\frac{1}{x}-\frac{1}{2x^2}+\frac{1}{3x^3}-\frac{1}{4x^4}+\cdots\cdots$

$$\therefore\ \log\left(2+x+\frac{1}{x}\right)=x+\frac{1}{x}-\frac{1}{2}\left(x^2+\frac{1}{x^2}\right)+\frac{1}{3}\left(x^3+\frac{1}{x^3}\right)$$

$$-\frac{1}{4}\left(x^4+\frac{1}{x^4}\right)+\cdots\cdots$$

The series is, however, convergent only when $x=1$.

13. Show that $1+\frac{2^2}{\lfloor 2}+\frac{3^3}{\lfloor 3}+\frac{4^3}{\lfloor 4}\cdots\cdots=5e$.

$$1+\frac{2^2}{\lfloor 2}+\frac{3^3}{\lfloor 3}+\frac{4^3}{\lfloor 4}+\frac{5^5}{\lfloor 5}+\frac{6^6}{\lfloor 6}$$

$$=1+2^2+\frac{3^2}{\lfloor 2}+\frac{4^2}{\lfloor 3}+\frac{5^2}{\lfloor 4}+\frac{6^2}{\lfloor 5}$$

$$=1+1+3+\frac{8+1}{\lfloor 2}+\frac{15+1}{\lfloor 3}+\frac{24+1}{\lfloor 4}+\frac{35+1}{\lfloor 5}+\cdots\cdots$$

$$=e+3+\frac{8}{\lfloor 2}+\frac{15}{\lfloor 3}+\frac{24}{\lfloor 4}+\frac{35}{\lfloor 5}+\cdots\cdots$$

$$=e+3+4+\frac{5}{\lfloor 2}+\frac{6}{\lfloor 3}+\frac{7}{\lfloor 4}+\cdots\cdots$$

$$=e+3e+1+\frac{2}{\lfloor 2}+\frac{3}{\lfloor 3}+\frac{4}{\lfloor 4}+\cdots\cdots$$

$$=4e+1+1+\frac{1}{\lfloor 2}+\frac{1}{\lfloor 3}+\cdots\cdots$$

$$=5e$$

Exercise 132.

Find the quotient and remainder obtained by dividing each of the following expressions by the divisor opposite it:

1. $x^3+5x^2-7x-3 \qquad x-2.$

$$\begin{array}{r} 1+5-\ 7-\ 3 \mid 2 \\ 2+14+14 \\ \hline 1+7+\ 7+11 \end{array}$$

$\therefore$ The quotient is x^2+7x+7, and the remainder is 11.

2. $x^4-7x^3+5x^2-10x+12 \qquad x-3.$

$$\begin{array}{r} 1-7+\ 5-10+12 \mid 3 \\ 3-12-21-93 \\ \hline 1-4-\ 7-31-81 \end{array}$$

$\therefore$ The quotient is $x^3-4x^2-7x-31$, and the remainder is -81.

3. $2x^4+3x^3-6x^2-4x-24 \qquad x-2.$

$$\begin{array}{r} 2+3-\ 6-\ 4-24 \mid 2 \\ 4+14+16+24 \\ \hline 2+7+\ 8+12+\ 0 \end{array}$$

$\therefore$ The quotient is $2x^3+7x^2+8x+12$, and the remainder is 0.

4. $x^5-3x^3+2x^2-5 \qquad x-4.$

$$\begin{array}{r} 1+0-\ 3+\ 2+\ \ 0-\ \ 5 \mid 4 \\ 4+16+52+216+864 \\ \hline 1+4+13+54+216+859 \end{array}$$

$\therefore$ The quotient is $x^4+4x^3+13x^2+54x+216$, and the remainder is 859.

5. $3x^4-6x^2+7x-10 \qquad x+3.$

$$\begin{array}{r} 3+0-\ 6+\ 7-\ 10 \mid -3 \\ -9+27-63+168 \\ \hline 3-9+21-56+158 \end{array}$$

$\therefore$ The quotient is $3x^3-9x^2+21x-56$, and the remainder is 158.

6. $x^3+3x^2+x+4 \qquad x+\sqrt{-1}.$

$$\begin{array}{l} 1+3 \quad +1 \quad +4 \,|\, -\sqrt{-1} \\ \quad -\sqrt{-1} \; -1-3\sqrt{-1}-3 \\ \hline 1+(3-\sqrt{-1})- \quad 3\sqrt{-1}+1 \end{array}$$

$\therefore$ The quotient is $x^2+(3-\sqrt{-1})x-3\sqrt{-1}$, and the remainder is 1.

Are the following numbers roots of the equations opposite them?

7. (2) $\qquad x^3-3x^2+4x+4=0.$

$$\begin{array}{l} 1-3+4+4 \,|\, 2 \\ \quad 2-2+4 \\ \hline 1-1+2+8 \end{array}$$

$\therefore$ 2 is not a root.

8. (−3) $\qquad x^4-3x^3+7x^2-9x+84=0.$

$$\begin{array}{l} 1-3+\;7-\;9+\;84 \,|\, -3 \\ \quad -3+18-75+252 \\ \hline 1-6+25-84+336 \end{array}$$

$\therefore$ −3 is not a root.

9. (−5) $\qquad x^5+6x^4+7x^3+9x^2-5=0.$

$$\begin{array}{l} 1+6+7+\;9+0-\;5 \,|\, -5 \\ \quad -5-5-10+5-25 \\ \hline 1+1+2-\;1+5-30 \end{array}$$

$\therefore$ −5 is not a root.

10. (0.2) $\qquad x^3-2.2x^2+3.4x-0.6=0.$

$$\begin{array}{l} 1-2.2+3.4-0.6 \,|\, 0.2 \\ \quad +0.2-0.4+0.6 \\ \hline 1-2.0+3.0+0 \end{array}$$

$\therefore$ 0.2 is a root.

Find the values of the following expressions, when for x we put the numbers opposite the expressions.

11. $2x^3+3x^2+5x-10$ **(2).**

$$\begin{array}{r} 2+3+\ 5-10\,|\,2 \\ \quad 4+14+38 \\ \hline 2+7+19+28 \end{array}$$

∴ **The required value is 28.**

12. $3x^5-5x^4+2x^2+3x-15$ **(3).**

$$\begin{array}{r} 3-5+\ 2+\ 3-\ 15\,|\,3 \\ \quad 9+12+42+135 \\ \hline 3+4+14+45+120 \end{array}$$

∴ **The required value is 120.**

13. $x^4-4x^3+7x^2+9x+12$ **(−3).**

$$\begin{array}{r} 1-4+\ 7+\ 9+\ 12\,|\,-3 \\ -3+21-84+225 \\ \hline 1-7+28-75+237 \end{array}$$

∴ **The required value is 237.**

Exercise 133.

Solve the equations:

1. $x^3-3x+2=0.$

1 is obviously a root. Dividing by $x-1$, we have

$$\begin{array}{r} 1+0-3+2\,|\,+1 \\ \quad 1+1-2 \\ \hline 1+1-2+0 \end{array}$$

The reduced equation is $x^2+x-2=0$, of which the roots are 1 and -2.

∴ The roots of the given equation are 1, 1, -2.

2. $x^3 + x^2 - 16x + 20 = 0$.

$+1$ and -1 are not roots. Try $+2$.

$$\begin{array}{r|l} 1 + 1 - 16 + 20 & \underline{2} \\ 2 + 6 - 20 & \\ \hline 1 + 3 - 10 + 0 & \end{array}$$

$\therefore$ $+2$ is a root. The reduced equation is $x^2 + 3x - 10 = 0$, of which the roots are 2 and -5.

$\therefore$ The roots of the given equation are 2, 2, -5.

3. $x^3 - 8x^2 + 21x - 18 = 0$.

$+1$ and -1 are not roots. Try $+2$.

$$\begin{array}{r|l} 1 - 8 + 21 - 18 & \underline{2} \\ 2 - 12 + 18 & \\ \hline 1 - 6 + 9 + 0 & \end{array}$$

$\therefore$ $+2$ is a root. The reduced equation is $x^2 - 6x + 9 = 0$, of which the roots are 3 and 3.

$\therefore$ The roots of the given equation are 2, 3, 3.

4. $x^3 - x^2 - 8x + 12 = 0$.

$+1$ and -1 are not roots. Try $+2$.

$$\begin{array}{r|l} 1 - 1 - 8 + 12 & \underline{2} \\ 2 + 2 - 12 & \\ \hline 1 + 1 - 6 + 0 & \end{array}$$

$\therefore$ $+2$ is a root. The reduced equation is $x^2 + x - 6 = 0$, of which the roots are 2 and -3.

$\therefore$ The roots of the given equation are 2, 2, -3.

5. $x^3 + 3x^2 - 4 = 0$.

$+1$ is a root. Divide by $x - 1$.

$$\begin{array}{r|l} 1 + 3 + 0 - 4 & \underline{1} \\ 1 + 4 + 4 & \\ \hline 1 + 4 + 4 + 0 & \end{array}$$

$\therefore$ $+1$ is a root. The reduced equation is $x^2 + 4x + 4 = 0$, of which the roots are -2 and -2.

$\therefore$ The roots of the given equations are 1, -2, -2.

6. $x^4 + 2x^3 - 11x^2 - 12x + 36 = 0.$

$+1$ and -1 are not roots. Try $+2$.

$$\begin{array}{rrrrr|l} 1 & +2 & -11 & -12 & +36 & \underline{+2} \\ & 2 & +8 & -6 & -36 & \\ \hline 1 & +4 & -3 & -18 & +0 & \end{array}$$

$\therefore$ $+2$ is a root. The reduced equation is $x^3 + 4x^2 - 3x - 18 = 0$. Try 2 again.

$$\begin{array}{rrrr|l} 1 & +4 & -3 & -18 & \underline{2} \\ & 2 & +12 & +18 & \\ \hline 1 & +6 & +9 & +0 & \end{array}$$

$\therefore$ $+2$ is again a root. The reduced equation is $x^2 + 6x + 9 = 0$, of which the roots are -3 and -3.

$\therefore$ The roots of the given equation are $2, 2, -3, -3$.

7. $x^4 - x^3 - 10x^2 + 4x + 24 = 0.$

$+1$ and -1 are not roots. Try 2.

$$\begin{array}{rrrrr|l} 1 & -1 & -10 & +4 & +24 & \underline{2} \\ & 2 & +2 & -16 & -24 & \\ \hline 1 & +1 & -8 & -12 & +0 & \end{array}$$

$\therefore$ $+2$ is a root. The reduced equation is $x^3 + x^2 - 8x - 12 = 0$. Try 3.

$$\begin{array}{rrrr|l} 1 & +1 & -8 & -12 & \underline{3} \\ & 3 & +12 & +12 & \\ \hline 1 & +4 & +4 & +0 & \end{array}$$

$\therefore$ $+3$ is a root. The reduced equation is $x^2 + 4x + 4 = 0$, of which the roots are -2 and -2.

$\therefore$ The roots of the given equation are $2, 3, -2, -2$.

8. $x^4 - 4x^3 - 18x^2 + 108x - 135 = 0.$

$+1$ and -1 are not roots. Try 3.

$$\begin{array}{rrrrr|l} 1 & -4 & -18 & +108 & -135 & \underline{3} \\ & 3 & -3 & -63 & +135 & \\ \hline 1 & -1 & -21 & +45 & +0 & \end{array}$$

$\therefore +3$ is a root. The reduced equation is $x^3 - x^2 - 21x + 45 = 0$. Try 3 again.

$$\begin{array}{r} 1 - 1 - 21 + 45 \,\underline{|\,3} \\ 3 + 6 - 45 \\ \hline 1 + 2 - 15 + 0 \end{array}$$

$\therefore +3$ is again a root. The reduced equation is $x^2 + 2x - 15 = 0$, of which the roots are 3 and -5.

$\therefore$ The roots of the given equation are 3, 3, 3, -5.

9. $x^5 - 40x^3 + 160x^2 - 240x + 128 = 0$.

$+1$ and -1 are not roots. Try 2.

$$\begin{array}{r} 1 + 0 - 40 + 160 - 240 + 128 \,\underline{|\,2} \\ 2 + 4 - 72 + 176 - 128 \\ \hline 1 + 2 - 36 + 88 - 64 + 0 \end{array}$$

$\therefore +2$ is a root. The reduced equation is

$$x^4 + 2x^3 - 36x^2 + 88x + 64 = 0.$$

Try 2 again.

$$\begin{array}{r} 1 + 2 - 36 + 88 - 64 \,\underline{|\,2} \\ 2 + 8 - 56 + 64 \\ \hline 1 + 4 - 28 + 32 + 0 \end{array}$$

$\therefore +2$ is again a root. The reduced equation is

$$x^3 + 4x^2 - 28x + 32 = 0.$$

Try 2 again.

$$\begin{array}{r} 1 + 4 - 28 + 32 \,\underline{|\,2} \\ 2 + 12 - 32 \\ \hline 1 + 6 - 16 + 0 \end{array}$$

$\therefore +2$ is again a root. The reduced equation is $x^2 + 6x - 16 = 0$, of which the roots are 2 and -8.

$\therefore$ The roots of the given equation are 2, 2, 2, 2, -8.

10. $x^5 - 4x^4 - 13x^3 + 52x^2 + 36x - 144 = 0$.

$+1$ and -1 are not roots. Try 2.

$$\begin{array}{r} 1 - 4 - 13 + 52 + 36 - 144 \,\underline{|\,2} \\ 2 - 4 - 34 + 36 + 144 \\ \hline 1 - 2 - 17 + 18 + 72 + 0 \end{array}$$

$\therefore +2$ is a root. The reduced equation is $x^4-2x^3-17x^2+18x+72=0$. Try 3.

$$\begin{array}{r} 1-2-17+18+72\,|\,3 \\ 3+3-42-24 \\ \hline 1+1-14-24+0 \end{array}$$

$\therefore +3$ is a root. The reduced equation is $x^3+x^2-14x-24=0$. Try 4

$$\begin{array}{r} 1+1-14-24\,|\,4 \\ 4+20+24 \\ \hline 1+5+6+0 \end{array}$$

$\therefore +4$ is a root. The reduced equation is $x^2+5x+6=0$, of which the roots are -2 and -3.

$\therefore$ The roots of the given equations are 2, 3, 4, -2, -3.

11. $x^4+2x^3-5x^2-12x-4=0$.

$+1$ and -1 are not roots. Try -2.

$$\begin{array}{r} 1+2-5-12-4\,|\,-2 \\ -2+0+10+4 \\ \hline 1+0-5-2+0 \end{array}$$

$\therefore -2$ is a root. The reduced equation is $x^3-5x-2=0$. Try -2 again.

$$\begin{array}{r} 1+0-5-2\,|\,-2 \\ -2+4+2 \\ \hline 1-2-1+0 \end{array}$$

$\therefore -2$ is again a root. The reduced equation is $x^2-2x-1=0$, of which the roots are $1+\sqrt{2}$ and $1-\sqrt{2}$.

$\therefore$ The roots of the given equation are -2, -2, $1+\sqrt{2}$, $1-\sqrt{2}$.

Exercise 134.

Form the equations of which the roots are:

1. 2, 3, −5.

$(x-2)(x-3)(x+5)=0,$
or $x^3-19x+30=0.$

2. 3, 1, −2.

$(x-3)(x-1)(x+2)=0,$
or $x^3-2x^2-5x+6=0.$

3. 2, −3, −2.

$(x-2)(x+3)(x+2)=0,$
or $x^3+3x^2-4x-12=0.$

4. 3, 4, −6.

$(x-3)(x-4)(x+6)=0,$
or $x^3-x^2-30x+72=0.$

5. 3, 0, −4.

$(x-3)x(x+4)=0,$
or $x^3+x^2-12x=0.$

6. 2, 3, $\frac{1}{2}$.

$(x-2)(x-3)(x-\frac{1}{2})=0,$
or $x^3-\frac{11}{2}x^2+\frac{17}{2}x-3=0,$
or $2x^3-11x^2+17x-6=0.$

7. $3+\sqrt{2}$, $3-\sqrt{2}$, −6.

$(x-3-\sqrt{2})(x-3+\sqrt{2})(x+6)=0,$
or $x^3-29x+42=0.$

8. $1+\sqrt{3}$, $1-\sqrt{3}$, $\frac{1}{2}$.

$(x-1-\sqrt{3})(x-1+\sqrt{3})(x-\frac{1}{2})=0,$
or $x^3-\frac{5}{2}x^2-x+1=0,$
or $2x^3-5x^2-2x+2=0.$

9. 1, 3, −2, −4.

$(x-1)(x-3)(x+2)(x+4)=0,$
or $x^4+2x^3-13x^2-14x+24=0.$

10. 2, $\frac{1}{2}$, −2, $-\frac{1}{2}$.

$(x-2)(x-\frac{1}{2})(x+2)(x+\frac{1}{2})=0,$
or $(x^2-4)(x^2-\frac{1}{4})=0.$
$x^4-\frac{17}{4}x^2+1=0,$
or $4x^4-17x^2+4=0.$

11. $\frac{1}{2}$, $\frac{1}{3}$, $\frac{1}{4}$, $-\frac{1}{2}$.

$(x-\frac{1}{2})(x-\frac{1}{3})(x-\frac{1}{4})(x+\frac{1}{2})=0,$
or $x^4-\frac{7}{12}x^3-\frac{1}{6}x^2+\frac{7}{48}x-\frac{1}{48}=0,$
or $48x^4-28x^3-8x^2+7x-1=0.$

12. $1+\sqrt{2},\ 1-\sqrt{2},\ \sqrt{3}+1,\ -\sqrt{3}+1.$

$$(x-1-\sqrt{2})(x-1+\sqrt{2})(x-\sqrt{3}-1)(x+\sqrt{3}-1)=0,$$

or $$x^4-4x^3+x^2+6x+2=0.$$

13. $2+\sqrt{-1},\ 2-\sqrt{-1},\ 1+2\sqrt{-1},\ 1-2\sqrt{-1}.$

$$(x-2-\sqrt{-1})(x-2+\sqrt{-1})(x-1-2\sqrt{-1})(x-1+2\sqrt{-1})=0,$$

or $$x^4-6x^3+18x^2-30x+25=0.$$

14. $1,\ -2,\ 3,\ -4,\ 5.$

$$(x-1)(x+2)(x-3)(x+4)(x-5)=0,$$

or $$x^5-3x^4-23x^3+51x^2+94x-120=0.$$

15. $\frac{1}{2},\ \frac{1}{3},\ \frac{1}{6},\ 2,\ 3.$

$$(x-\tfrac{1}{2})(x-\tfrac{1}{3})(x-\tfrac{1}{6})(x-2)(x-3)=0,$$

or $$x^5-6x^4+\tfrac{4\,0\,1}{6}x^3-\tfrac{6\,5}{3}x^2+\tfrac{7\,1}{6}x-\tfrac{1}{6}=0.$$

Exercise 135.

Construct the graphs of the following functions:

1. $x^2+3x-10.$

Put $y=x^2+3x-10.$

$x=$	$y=$	$x=$	$y=$
0	-10	$-\frac{1}{2}$	$-11\frac{1}{4}$
	$-8\frac{1}{4}$	-1	-12
1	-6	$-\frac{3}{2}$	$-12\frac{1}{4}$
$\frac{3}{2}$	$-3\frac{1}{4}$	-2	-12
2	0	$-\frac{5}{2}$	$-11\frac{1}{4}$
$\frac{5}{2}$	$3\frac{3}{4}$	-3	-10
3	8	$-\frac{7}{2}$	$-8\frac{1}{4}$
		-4	-6
		$-\frac{9}{2}$	$-3\frac{1}{4}$
		-5	0
		$-\frac{11}{2}$	$3\frac{3}{4}$
		-6	8

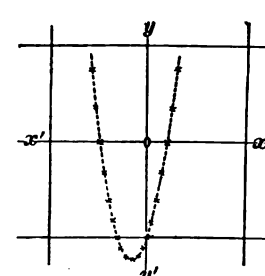

The curve crosses the axis $X'X$ at the points for which

$$x^2 + 3x - 10 = 0$$

or $$(x+5)(x-2) = 0$$

$$\therefore\ x = 2, \text{ or } -5$$

2. $x^3 - 2x^2 + 1$.

Put $y = x^3 - 2x^2 + 1$.

$x=$	$y=$	$x=$	$y=$
0	1	$-\frac{1}{2}$	$\frac{5}{8}$
$\frac{1}{2}$	$\frac{5}{8}$	-1	-2
1	0	$-\frac{3}{2}$	$-6\frac{7}{8}$
$\frac{3}{2}$	$-\frac{1}{8}$	-2	-17
2	1		
$\frac{5}{2}$	$4\frac{1}{8}$		
3	10		

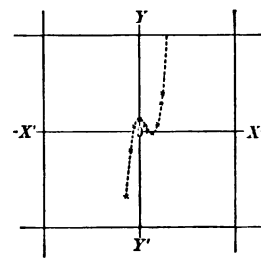

The curve crosses the axis $X'X$ at the points for which

$$x^3 - 2x^2 + 1 = 0$$

or $$(x-1)(x^2 - x - 1) = 0$$

$$\therefore\ x = 1, \text{ or } \frac{1 \pm \sqrt{5}}{2}$$

3. $x^4 - 20x^2 + 64$.

Put $y = x^4 - 20x^2 + 64$.

$x=$	$y=$
0	64
$\pm\frac{1}{2}$	$59\frac{1}{16}$
± 1	45
$\pm\frac{3}{2}$	$24\frac{1}{16}$
± 2	0
$\pm\frac{5}{2}$	$-41\frac{15}{16}$
± 3	-35
$\pm\frac{7}{2}$	$-30\frac{15}{16}$
± 4	0
$\pm\frac{9}{2}$	$69\frac{1}{16}$
± 5	189

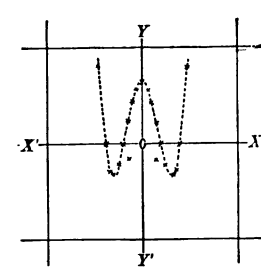

The curve cuts the axis $X'X$ in the points for which

$$x^4 - 20x^2 + 64 = 0$$

or $$(x^2 - 16)(x^2 - 4) = 0$$

$$\therefore\ x = \pm 2, \text{ or } \pm 4$$

The curve is evidently symmetrical with respect to the axis $Y'Y$.

In the figure the curve has been shortened vertically. Each division on the $Y'Y$ axis represents 10 units.

4. $x^2 - 4x + 10$.

Let $y = x^2 - 4x + 10$

$x =$	$y =$	$x =$	$y =$
0	10	-1	15
1	7	-2	22
2	6		
3	7		
4	10		
5	15		

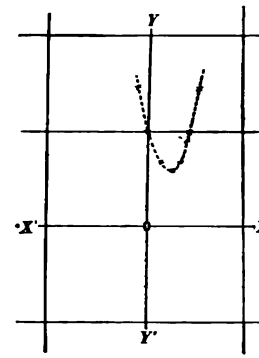

The curve does not cut the axis $X'X$.

For $x^2 - 4x + 10 = (x-2)^2 + 6$,

and this is never negative.

5. $x^4 - 5x^2 + 4$.

Let $y = x^4 - 5x^2 + 4$

$x =$	$y =$
0	4
$\pm \frac{1}{2}$	$3\frac{3}{16}$
± 1	0
$\pm \frac{3}{2}$	$-2\frac{9}{16}$
± 2	0
$\pm \frac{5}{2}$	$11\frac{1}{16}$

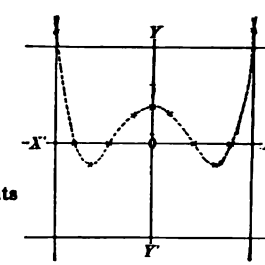

The curve cuts the axis $X'X$ in the points for which

$$x^4 - 5x^2 + 4 = 0$$

or $$(x^2 - 1)(x^2 - 4) = 0$$

$$\therefore x = \pm 1, \text{ or } \pm 4$$

The curve is evidently symmetrical with respect to the axis $Y'Y$.

In the figure the curve has been magnified horizontally and shortened vertically.

Thus 4 divisions of the $X'X$ axis represent 1 unit, while 1 division of the $Y'Y$ axis represents 10 units.

6. $x^3 - 4x^2 + x - 1$.

Let $y = x^3 - 4x^2 + x - 1$

$x =$	$y =$	$x =$	$y =$
0	-1	$-\frac{1}{2}$	$-2\frac{5}{8}$
$\frac{1}{2}$	$-1\frac{3}{8}$	-1	-7
1	-3	$-\frac{3}{2}$	$-14\frac{7}{8}$

$x=$	$y=$	$x=$	$y=$
$\frac{3}{2}$	$-5\frac{1}{8}$	$\frac{7}{2}$	$-3\frac{5}{8}$
2	-7	4	3
$\frac{5}{2}$	$-7\frac{7}{8}$	$\frac{9}{2}$	$13\frac{5}{8}$
3	-7		

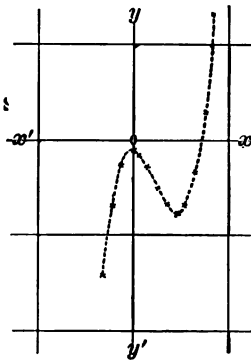

The curve cuts the axis $X'X$ in the points for which

$$x^3 - 4x^2 + x - 1 = 0.$$

From the figure it appears that two of these points are imaginary, while the third lies between $\frac{7}{2}$ and 4.

The figure is magnified horizontally. Two divisions of the $X'X$ axis represent 1 unit.

Exercise 136.

Find the derivatives with respect to x of:

1. x^2. $2x$.

2. x^3. $3x^2$.

3. x^4. $4x^3$.

4. $3x^5$. $15x^4$.

5. x^{-2}. $-2x^{-3}$.

6. $\frac{2}{x^3}$. $-\frac{6}{x^4}$.

7. $x^3 + 2x$. $3x^2 + 2$.

8. $x^2 + 3x + 4$. $2x + 3$.

9. $3x^4 + 2x^3 + 5x^2 + 6x + 4$. $12x^3 + 6x^2 + 10x + 6$.

10. $(x+3)^2$. $2(x+3)$.

11. $(x+a)^3$. $3(x+a)^2$.

12. $(x+1)^{-2}$.

$$\left(\frac{1}{(x+h+1)^2} - \frac{1}{(x+1)^2}\right) \div h = \frac{(x+1)^2 - (x+h+1)^2}{h(x+h+1)^2(x+1)^2}$$

$$= \frac{-2h(x+1) - h^2}{h(x+h+1)^2(x+1)^2}$$

$$= \frac{-2(x+1) + h}{(x+h+1)^2(x+1)^2}.$$

Put $h = 0$.

Then the derivative $= -\frac{2(x+1)}{(x+1)^4} = -\frac{2}{(x+1)^3}$

13. $$\frac{1}{x^2-1} = \left(\frac{1}{(x+h)^2-1} - \frac{1}{x^2-1}\right) \div h.$$

$$= \frac{x^2-1-(x+h)^2+1}{h[(x+h)^2-1](x^2-1)}$$

$$= \frac{-2hx+h^2}{h[(x+h)^2-1](x^2-1)}$$

$$= \frac{2x-h}{[(x+h)^2-1](x^2-1)}$$

$$= -\frac{2x}{(x^2-1)^2}.$$

EXERCISE 137.

The following equations have multiple roots. Find all the roots of each equation.

1. $x^3-5x^2+7x-3=0.$

$$f(x) = x^3-5x^2+7x-3,$$
$$f'(x) = 3x^2-10x+7.$$

Find the H. C. F.

$$\begin{array}{r|l|l}
3-10+7 & 1-5+7-3 & \\
3-3 & \underline{\qquad\qquad 3} & \\
\underline{-7+7} & 3-15+21-9 & 1 \\
 & \underline{3-10+7} & \\
 & -5+14-9 & \\
 & \underline{\qquad\qquad 3} & \\
 & -15+42-27 & -5 \\
 & \underline{-15+50-35} & \\
 & -8)-8+8 & \\
 & \underline{\qquad 1-1} & 3-7
\end{array}$$

$\therefore x-1$ is the H. C. F.

We find $x^3-5x^2+7x-3 = (x-1)^2(x-3).$

$\therefore$ The three roots are 1, 1, 3.

2. $x^3-3x^2+4=0.$

$$f(x) = x^3-3x^2+4,\ f'(x) = 3x^2-6x = 3x(x-2).$$

If there is a H. C. F., it must be $x-2.$

We find $x^3-3x^2+4 = (x-2)^2(x+1).$

$\therefore$ The roots are 2, 2, $-1.$

3. $x^4 - 2x^3 - 7x^2 + 20x - 12 = 0.$

$f(x) = x^4 - 2x^3 - 7x^2 + 20x - 12$, $f'(x) = 4x^3 - 6x^2 - 14x + 20.$

Find the H. C. F.

$2)\,4 - 6 - 14 + 20$	$1 - 2 - 7 + 20 - 12$	
$2 - 3 - 7 + 10$	2	
17	$2 - 4 - 14 + 40 - 24$	1
$34 - 51 - 119 + 170$	$2 - 3 - 7 + 10$	
$34 - 106 + 76$	$-1 - 7 + 30 - 24$	
$5)\,55 - 195 + 170$	2	
$11 - 39 + 34$	$-2 - 14 + 60 - 48$	-1
17	$-2 + 3 + 7 - 10$	
$187 - 663 + 578$	$-17 + 53 - 38$	$-2 - 11$
$187 - 583 + 418$	$-17 + 34$	$-17 + 19$
$80)\,-80 + 160$	$19 - 38$	
$1 - 2$	$19 - 38$	

$\therefore$ The H. C. F. is $x - 2$.

We find $x^4 - 2x^3 - 7x^2 + 20x - 12 = (x-2)^2(x^2 + 2x - 3).$

The roots of $x^2 + 2x - 3 = 0$ are 1 and -3.

$\therefore$ The roots of the given equation are 1, 2, 2, -3.

4. $x^4 - 2x^3 - 11x^2 + 12x + 36 = 0.$

$f(x) = x^4 - 2x^3 - 11x^2 + 12x + 36$, $f'(x) = 4x^3 - 6x^2 - 22x + 12.$

Find the H. C. F.

$2)\,4 - 6 - 22 + 12$	$1 - 2 - 11 + 12 + 36$	
$2 - 3 - 11 + 6$	2	
$2 - 2 - 12$	$2 - 4 - 22 + 24 + 72$	1
$-1 + 1 + 6$	$2 - 3 - 11 + 6$	
$-1 + 1 + 6$	$-1 - 11 + 18 + 72$	
	2	
	$-2 - 22 + 36 + 144$	-1
	$-2 + 3 + 11 - 6$	
	$-25)\,-25 + 25 + 150$	
	$1 - 1 - 6$	$2 - 1$

$\therefore$ The H. C. F. is $x^2 - x - 6 = (x+2)(x-3)$.

Therefore $x^4 - 2x^3 - 11x^2 + 12x + 36 = (x+2)^2(x-3)^2.$

$\therefore$ The roots of the given equation are -2, -2, 3, 3.

5. $x^4 - 24x^2 + 64x - 48 = 0.$

$f(x) = x^4 - 24x^2 + 64x - 48, \quad f'(x) = 4x^3 - 48x + 64.$

Find the H. C. F.

$$\begin{array}{r|l|l}
4)4+0-48+64 & 1+0-24+64-48 & 1 \\
1+0-12+16 & \underline{1+0-12+16} & \\
\underline{1-4+4} & -12)-12+48-48 & \\
4-16+16 & 1-4+4 & 1+4 \\
\underline{4-16+16} & &
\end{array}$$

$\therefore$ The H. C. F. is $x^2 - 4x + 4 = (x-2)^2$.

We find $\quad x^4 - 24x^2 + 64x - 48 = (x-2)^3(x+6).$

$\therefore$ The roots of the given equation are 2, 2, 2, -6.

6. $x^5 + x^4 - 17x^3 - 21x^2 + 72x + 108 = 0.$

$f(x) = x^5 + x^4 - 17x^3 - 21x^2 + 72x + 108,$

$f'(x) = 5x^4 + 4x^3 - 51x^2 - 42x + 72.$

Find the H. C. F.

$$\begin{array}{r|l|l}
5+4-51-42+72 & 1+1-17-21+72+108 & \\
29 & 5 & \\
145+116-1479-1218+2088 & 5+5-85-105+360+540 & 1 \\
115+220-1235-2190 & \underline{5+4-51-42+72} & \\
-4)-104-244+972+2088 & 1-34-63+288+540 & \\
26+61-243-522 & 5 & \\
29 & 5-170-315+1440+2700 & 1 \\
754+1769-7047-15138 & \underline{5+4-51-42+72} & \\
754+1144-6422-11388 & -6)-174-264+1482+2628 & \\
625)625-625-3750 & 29+44-247-438 & 1+26 \\
1-1-6 & \underline{29-29-174} & 29 \\
 & 73)73-73-438 & \\
 & 1-1-6 & 1 \\
 & \underline{1-1-6} &
\end{array}$$

$\therefore$ The H. C. F. is $x^3 - x - 6 = (x-3)(x+2)$.

We find

$x^5 + x^4 - 17x^3 - 21x^2 + 72x + 108 = (x-3)^2(x+2)^2(x+3).$

$\therefore$ The roots of the given equation are 3, 3, -2, -2, -3.

7. $x^6 - 5x^5 + 5x^4 + 9x^3 - 14x^2 - 4x + 8 = 0.$

$f(x) = x^6 - 5x^5 + 5x^4 + 9x^3 - 14x^2 - 4x + 8,$

$f'(x) = 6x^5 - 25x^4 + 20x^3 + 27x^2 - 28x - 4.$

Find the H. C. F.

6− 25+ 20+ 27− 28− 4	1− 5+ 5+ 9− 14− 4+ 8	
65	6	
390−1625+1300+1755−1820− 260	6−30+ 30+ 54− 84− 24+ 48	1
390−1572+1206+1560−1608	6−25+ 20+ 27− 28− 4	
− 53+ 94+ 195− 212− 260	− 5+ 10+ 27− 56− 20+ 48	
− 53+ 742−1749− 212+2332	6	
−648)− 648+1944+ 0−2592	−30+ 60+162−336−120+288	
1− 3+ 0+ 4	−30+125−100−135+140+ 20	−5
	− 65+260−201−260+268	−6
	− 53+ 94+195−212−260	1
	−12)− 12+168−396− 48+528	
	1− 14+ 33+ 4− 44	−53
	1− 3+ 0+ 4	1
	− 11+ 33+ 0− 44	−11
	− 11+ 33+ 0− 44	

$\therefore$ The H. C. F. is $x^3 - 3x^2 + 4 = (x+1)(x-2)^2.$

We find $x^6 - 5x^5 + 5x^4 + 9x^3 - 14x^2 - 4x + 8 = (x+1)^2(x-2)^3(x-1).$

$\therefore$ The roots of the given equation are $-1, -1, 2, 2, 2, 1.$

Exercise 138.

Multiply the roots of each of the following equations by the number placed opposite the equation.

1. $x^3 - 5x^2 + 2x - 3 = 0$ (-1)

$x^3 + 5x^2 + 2x + 3 = 0.$

2. $x^4 + 4x^2 + 3x + 5 = 0$ $(2).$

$x^4 + 4(2)^2x^2 + 3(2)^3x + 5(2)^4 = 0,$

or $x^4 + 16x^2 + 24x + 80 = 0.$

3. $2x^3 - 3x^2 + 5x - 7 = 0$ $(-2).$

$2x^3 - 3(-2)x^2 + 5(-2)^2x - 7(-2)^3,$

or $2x^3 + 6x^2 + 20x + 56 = 0.$

4. $5x^4 - 3x^3 + 2x - 6 = 0$ (5).

$5x^4 - 3(5)x^3 + 2(5)^3x - 6(5)^4 = 0,$

or $5x^4 - 15x^3 + 250x - 3150 = 0.$

Write the equations which have for their roots the reciprocals of the roots of the following equations:

5. $2x^3 + 3x^2 - x - 2 = 0.$

$2 + 3x - x^2 - 2x^3 = 0,$

or $2x^3 + x^2 - 3x - 2 = 0.$

6. $3x^4 + 5x^3 - x^2 + 2x + 3 = 0.$

$3 + 5x - x^2 + 2x^3 + 3x^4 = 0,$

or $3x^4 + 2x^3 - x^2 + 5x + 3 = 0.$

7. $2x^5 + 3x^4 - 6x^3 + 6x^2 - 3x - 2 = 0.$

$2 + 3x - 6x^2 + 6x^3 - 3x^4 - 2x^5 = 0,$

or $2x^5 + 3x^4 - 6x^3 + 6x^2 - 3x - 2 = 0.$

Diminish the roots of each of the following equations by the number opposite the equation:

8. $x^3 + 4x^2 - 12x - 17 = 0$ (2).

$$\begin{array}{r} 1 + 4 - 12 - 17 \,|\, 2 \\ \quad 2 + 12 + 0 \\ \hline 1 + 6 + 0 - 17 \\ \quad 2 + 16 \\ \hline 1 + 8 + 16 \\ \quad 2 \\ \hline 1 + 10 \end{array}$$

$x^3 + 10x^2 + 16x - 17 = 0.$

9. $3x^4 - 10x^3 + 2x^2 - 5x + 6 = 0$ (3).

$$\begin{array}{r} 3 - 10 + 2 - 5 + 6 \,|\, 3 \\ \quad 9 - 3 - 3 - 24 \\ \hline 3 - 1 - 1 - 8 - 18 \\ \quad 9 + 24 + 69 \\ \hline 3 + 8 + 23 + 61 \\ \quad 9 + 51 \\ \hline 3 + 17 + 74 \\ \quad 9 \\ \hline 3 + 26 \end{array}$$

$3x^4 + 26x^3 + 74x^2 + 61x - 18 = 0.$

10. $x^5 - 5x^3 - 4x^2 + 8x + 10 = 0 \quad (-2)$.

$$\begin{array}{r|l}
1+\ 0-\ 5-\ 4+\ 8+10 & -2 \\
\quad -\ 2+\ 4+\ 2+\ 4-24 & \\
\hline
1-\ 2-\ 1-\ 2+12-14 & \\
\quad -\ 2+\ 8-14+32 & \\
\hline
1-\ 4+\ 7-16+44 & \\
\quad -\ 2+12-38 & \\
\hline
1-\ 6+19-54 & \\
\quad -\ 2+16 & \\
\hline
1-\ 8+35 & \\
\quad -\ 2 & \\
\hline
1-10 &
\end{array}$$

$x^5 - 10x^4 + 35x^3 - 54x^2 + 44x - 14 = 0$.

Exercise 139.

All the roots of the equations given below are real; determine their signs.

1. $x^4 + 4x^3 - 43x^2 - 58x + 240 = 0$.

The order of signs is + + − − +.
There are two variations and two permanences.
∴ There are two positive roots and two negative roots.

2. $x^3 - 22x^2 + 155x - 350 = 0$.

The order of signs is + − + −
There are 3 variations. ∴ There are 3 positive roots.

3. $x^4 + 4x^3 - 35x^2 - 78x + 360 = 0$.

The order of signs is + + − − +
There are two variations and two permanences.
∴ There are two positive roots and two negative roots.

4. $x^3 - 12x^2 - 43x - 30 = 0$.

The order of signs is + − − −
There are one variation and two permanences.
∴ There are one positive root and two negative roots.

5. $x^5 - 3x^4 - 5x^3 + 15x^2 + 4x - 12 = 0$.

The order of signs is $+ \; - \; - \; + \; + \; -$

There are three variations and two permanences.

$\therefore$ There are three positive roots and two negative roots.

6. $x^3 - 12x^2 + 47x - 60 = 0$.

The order of signs is $+ \; - \; + \; -$

There are three variations. $\therefore$ There are three positive roots.

7. **Show that the equation**

$$x^6 - 3x^2 - x + 1$$

has at least two imaginary roots.

The order of signs is $+ \; 0 \; 0 \; 0 \; - \; - \; +$

If we take the 0 terms as all positive, we have

$+ \; + \; + \; + \; - \; - \; +$ two variations,

so that there are not more than two positive roots; and if we take the first two negative and the third positive, we have

$+ \; - \; - \; + \; - \; - \; +$ two permanences,

so that there are not more than two negative roots.

$\therefore$ There are then not more than two positive roots, and not more than two negative roots.

$\therefore$ There are at least two imaginary roots.

8. **Show that the equation**

$$x^4 + 15x^2 + 7x - 11 = 0$$

has two imaginary roots, and determine the signs of the real roots.

The order of signs is

$$+ \; 0 \; + \; + \; -$$

We may write the signs

either $+ \; + \; + \; + \; -$ one variation,

or $+ \; - \; + \; + \; -$ one permanence.

$\therefore$ There is not more than one positive root, and not more than one negative root.

$\therefore$ There are at least two imaginary roots.

There cannot be four imaginary roots. For if $\alpha + \beta i$, $\alpha - \beta i$, $\gamma + \delta i$, and $\gamma - \delta i$ are roots, their product is $(\alpha^2 + \beta^2)(\gamma^2 + \delta^2)$, which is positive, whereas -11 is negative.

$\therefore$ There is one positive root, one negative root, and two imaginary roots.

9. Show that the equation $x^n - 1 = 0$ has but two real roots, $+1$ and -1, when n is even; and but one real root, $+1$, when n is odd.

The order of signs is

$$+ \quad 0 \quad 0 \quad \cdots\cdots \quad -$$

If we take the zeros all positive, we have

$$+ \quad + \quad + \quad \cdots\cdots \quad + \quad -$$

This gives only one variation, and consequently only one positive root, namely $+1$.

If n is even, the equation is unchanged when we put $-x$ for x.

There will therefore be only one negative root, namely -1.

But if n is odd, the sign of x^n is changed when we put $-x$ for x, and the order of signs becomes

$$- \quad 0 \quad 0 \quad 0 \quad - \quad - \quad - \quad -$$

which we may take

$$- \quad - \quad - \quad \cdots\cdots \quad - \quad -$$

Here there is no variation, and consequently the equation $x^n - 1 = 0$ has no negative root in this case.

10. Show that the equation $x^n + 1 = 0$ has no real root when n is even; and but one real root, -1, when n is odd.

The order of signs is $+ \quad 0 \quad 0 \quad \cdots\cdots \quad +$

This may be taken as $+ \quad + \quad + \quad \cdots\cdots \quad + \quad +$

There is then no variation, and therefore no positive root.

Or, if n is even, we may take

$$+ \quad - \quad + \quad - \quad + \quad - \quad \cdots\cdots \quad - \quad +$$

There is then no permanence, and consequently no negative root.

But if n is odd, we have

$$+ \quad - \quad + \quad - \quad + \quad - \quad \cdots\cdots \quad - \quad + \quad +$$

There is only one permanence, and therefore only the one negative root, -1.

Exercise 140.

Find the commensurable roots and, if possible, all the roots of the following equations:

1. $x^3 + 2x^2 - 40x + 64 = 0$.

The factors of 64 are $\pm 1, \pm 2, \pm 4, \pm 8, \pm 16, \pm 32, \pm 64$.

± 1 are not roots. Try 2.

$$\begin{array}{r} 1 + 2 - 40 + 64 \,|\, 2 \\ \underline{\quad 2 + 8 - 64} \\ 1 + 4 - 32 + 0 \end{array}$$

2 is a root. The reduced equation is $x^2 + 4x - 32 = 0$, of which the roots are 4 and -8.

$\therefore$ The roots of the given equation are 2, 4, -8.

2. $x^3 - 3x^2 - 10x + 24 = 0$.

The factors of 24 are $\pm 1, \pm 2, \pm 3, \pm 4, \pm 6, \pm 8, \pm 12, \pm 24$.

± 1 are not roots. Try 2.

$$\begin{array}{r} 1 - 3 - 10 + 24 \,|\, 2 \\ \underline{\quad 2 - 2 - 24} \\ 1 - 1 - 12 + 0 \end{array}$$

2 is a root. The reduced equation is $x^2 - x - 12 = 0$, of which the roots are 4 and -3.

$\therefore$ The roots of the given equation are 2, -3, 4.

3. $x^4 + x^3 - 36x^2 - 24x - 72 = 0$.

The factors of 72 are $\pm 1, \pm 2, \pm 3, \pm 4, \pm 6, \pm 8, \pm 12, \pm 24, \pm 36, \pm 72$.

± 1 are not roots. Try 6.

$$\begin{array}{r} 1 + 1 - 36 - 24 - 72 \,|\, 6 \\ \underline{\quad 6 + 42 + 36 + 72} \\ 1 + 7 + 6 + 12 + 0 \end{array}$$

6 is a root. The other roots are incommensurable.

4. $x^4 - 7x^3 - 6x^2 - 18x + 16 = 0$.

The factors of 16 are $\pm 1, \pm 2, \pm 4, \pm 8, \pm 16$.

± 1 are not roots. Try 8.

$$\begin{array}{r} 1 - 7 - 6 - 18 + 16 \,|\, 8 \\ \underline{\quad 8 + 8 + 16 - 16} \\ 1 + 1 + 2 - 2 - 0 \end{array}$$

8 is a root. The other roots [illegible] commensurable.

5. $x^4 - 9x^3 + 17x^2 + 27x - 60 = 0$.

The factors of 60 are ± 1, ± 2, ± 3, ± 4, ± 5, ± 6, ± 10, ± 12, ± 15, ± 20, ± 30, ± 60.

± 1 are not roots. Try 4.

$$\begin{array}{r} 1 - 9 + 17 + 27 - 60 \mid 4 \\ \quad 4 - 20 - 12 + 60 \\ \hline 1 - 5 - 3 + 15 + 0 \end{array}$$

4 is a root. Try 5.

$$\begin{array}{r} 1 - 5 - 3 + 15 \mid 5 \\ \quad 5 + 0 - 15 \\ \hline 1 + 0 - 3 + 0 \end{array}$$

5 is a root. The reduced equation is $x^2 - 3 = 0$, from which the roots are $+\sqrt{3}$ and $-\sqrt{3}$.

∴ The roots of the given equation are $4, 5, +\sqrt{3}, -\sqrt{3}$.

6. $18x^4 - 33x^3 - 13x^2 + 12x + 4 = 0$.

Multiply the roots by 6. The resulting equation is

$$18x^4 - 33 \cdot 6x^3 - 13 \cdot 6^2 x^2 + 12 \cdot 6^3 x + 4 \cdot 6^4 = 0$$

or $$x^4 - 11x^3 - 26x^2 + 144x + 288 = 0.$$

The factors of 288 are ± 1, ± 2, ± 3, ± 4, ± 6, ± 8, ± 9, ± 12, ± 16, ± 18, ± 24, ± 32, ± 48, ± 72, ± 96, ± 144, ± 288.

± 1 are not roots. Try 4.

$$\begin{array}{r} 1 - 11 - 26 + 144 + 288 \mid 4 \\ \quad 4 - 28 - 216 - 288 \\ \hline 1 - 7 - 54 - 72 + 0 \end{array}$$

4 is a root. Try 12.

$$\begin{array}{r} 1 - 7 - 54 - 72 \mid 12 \\ \quad 12 + 60 + 72 \\ \hline 1 + 5 + 6 + 0 \end{array}$$

equation $x^2 + 5x + 6 = 0$, of which the roots are -2 and -3.

∴ the roots of the given equation are $4, 12, -\frac{1}{2}, -\frac{1}{3}$, or $\frac{1}{2}, -\frac{1}{2}, -\frac{1}{3}, -\frac{1}{3}$.

7. $27x^4 - 72x^3 + 33x^2 + 8x - 4 = 0.$

Multiply the roots by 3. The resulting equation is

$$27x^4 - 72.3x^3 + 33.9x^2 + 8.27x - 4.81 = 0,$$

or $$x^4 - 8x^3 + 11x^2 + 8x - 12 = 0.$$

The factors of 12 are $\pm 1, \pm 2, \pm 3, \pm 4, \pm 6, \pm 12$.

$+1$ is a root. -1 is a root.

$$\begin{array}{r} 1 - 8 + 11 + 8 - 12 \,\big|\, 1 \\ \quad 1 - 7 + 4 + 12 \\ \hline 1 - 7 + 4 + 12 + 0 \,\big|\, -1 \\ \quad -1 + 8 - 12 \\ \hline 1 - 8 + 12 + 0 \end{array}$$

The reduced equation is $x^2 - 8x + 12 = 0$, of which the roots are 2 and 6.

$\therefore$ The roots of the given equation are $\frac{1}{3}, -\frac{1}{3}, \frac{2}{3}, \frac{6}{3}$, or $\frac{1}{3}, -\frac{1}{3}, \frac{2}{3}, 2$.

8. $36x^5 - 60x^4 - 167x^3 + 52x^2 + 57x - 18 = 0.$

Multiply the roots by 6. The resulting equation is

$$36x^5 - 60 \cdot 6x^4 - 167 \cdot 36x^3 + 52 \cdot 216x^2 + 57 \cdot 1276x - 18 \cdot 7776 = 0,$$

or $$x^5 - 10x^4 - 167x^3 + 312x^2 + 2052x - 3888.$$

The simplest factors of 3888 are $\pm 1, \pm 2, \pm 3, \pm 4, \pm 6, \pm 8, \pm 12, \pm 16, \pm 18$.

± 1 are not roots. Try 2.

$$\begin{array}{r} 1 - 10 - 167 + 312 + 2052 - 3888 \,\big|\, 2 \\ \quad 2 - 16 - 366 - 108 - 3888 \\ \hline 1 - 8 - 183 - 54 + 1944 + 0 \end{array}$$

2 is a root. Try 3.

$$\begin{array}{r} 1 - 8 - 183 - 54 + 1944 \,\big|\, 3 \\ \quad 3 - 15 - 594 - 1944 \\ \hline 1 - 5 - 198 - 648 \end{array}$$

3 is a root. Try 18.

$$\begin{array}{r} 1 - 5 - 198 - 648 \,\big|\, 18 \\ \quad 18 + 234 + 648 \\ \hline 1 + 13 + 36 \end{array}$$

18 is a root. The reduced equation is $x^2 + 13x + 36 = 0$, of which the roots are -4 and -9.

$\therefore$ The roots of the given equation are $\frac{2}{6}, \frac{3}{6}, \frac{18}{6}, -\frac{4}{6}, -\frac{9}{6}$, or $\frac{1}{3}, \frac{1}{2}, 3, -\frac{2}{3}, -\frac{3}{2}$.

EXERCISE 141.

Determine the first significant figure of each real root of the following equations:

1. $x^3 - x^2 - 2x + 1 = 0$.

There are not more than two positive roots and not more than one negative root.

$f(0) = 1$
$f(0.4) = 0.104$ $\therefore$ one root is $+0.4+$
$f(0.5) = 0.125$
$f(1) = -1$
$f(2) = +1$ $\therefore$ one root is $+1.+$
$f(-1) = 1$
$f(-2) = -7$ $\therefore$ one root is $-1.+$

2. $x^3 - 5x - 3 = 0$.

There are not more than two negative roots and not more than one positive root.

$f(0) = -3$
$f(1) = -7$
$f(2) = -5$
$f(3) = 9$ $\therefore$ one root is $+2.+$
$f(-0.6) = -0.216$
$f(-0.7) = 0.157$ $\therefore$ one root is $-0.6+$
$f(-1) = 1$
$f(-2) = -1$ $\therefore$ one root is $-1.+$

3. $x^3 - 5x^2 + 7 = 0$.

There are not more than two positive roots and not more than one negative root.

$f(0) = 7$
$f(1) = 3$
$f(2) = -5$ $\therefore$ one root is $+1.+$
$f(3) = -11$
$f(4) = -9$
$f(5) = 7$ $\therefore$ one root is $+4.+$
$f(-1) = 1$
$f(-2) = -21$ $\therefore$ one root is $-1.+$

4. $x^3 + 2x^2 - 30x + 39 = 0$.

There are not more than two positive roots and not more than one negative root.

$f(0) = 39$
$f(1) = 12$
$f(2) = -5$ $\therefore$ one root is $+1.+$
$f(3) = -6$
$f(4) = 15$ $\therefore$ one root is $+3.+$
$f(-1) = 70$
$f(-2) = 99$
$f(-3) = 120$
$f(-4) = 127$
$f(-5) = 114$
$f(-6) = 75$
$f(-7) = 4$
$f(-8) = -105$ $\therefore$ one root is $-7.+$

5. $x^3 - 6x^2 + 3x + 5 = 0$.

There are not more than two positive roots and not more than one negative root.

$f(0) = 5$
$f(1) = 3$
$f(2) = -5$ $\therefore$ one root is $+1.+$
$f(3) = -13$
$f(4) = -15$
$f(5) = -5$
$f(6) = 23$ $\therefore$ one root is $+5.+$
$f(-1) = -5$
$f(-0.7) = -0.383$
$f(-0.6) = +0.824$ $\therefore$ one root is $-0.6+$

6. $x^3 + 9x^2 + 24x + 17 = 0$.

There is no positive root.

$f(0) = 17$
$f(-1) = 1$
$f(-2) = -3$ $\therefore$ one root is $-1.+$

$f(-3) = -1$
$f(-4) = 1$ $\therefore$ one root is $-3.+$
$f(-5) = -3$ $\therefore$ one root is $-4.+$

7. $x^3 - 15x^2 + 63x - 50 = 0.$

There is no negative root.

$f(0) = -50$
$f(1) = -1$
$f(2) = 24$ $\therefore$ one root is $+1.+$
$f(3) = 31$
$f(4) = 26$
$f(5) = 15$
$f(6) = 4$
$f(7) = -1$ $\therefore$ one root is $+6.+$
$f(8) = 6$ $\therefore$ one root is $+7.+$

8. $x^4 - 8x^3 + 14x^2 + 4x - 8 = 0.$

There are not more than three positive roots and not more than one negative root.

$f(0) = -8$
$f(0.7) = -0.8439$
$f(0.8) = +0.4736$ $\therefore$ one root is $+0.7+$
$f(1) = 3$
$f(2) = 8$
$f(3) = -5$ $\therefore$ one root is $+2.+$
$f(4) = -24$
$f(5) = -13$
$f(6) = 88$ $\therefore$ one root is $+5.+$
$f(-0.7) = -.9559$
$f(-0.8) = +2.2656$ $\therefore$ one root is $-0.7+$

Exercise 142.

Compute for each of the following equations the root of which the first figure is the number in parenthesis opposite the equation. Carry out the work to three places of decimals:

1. $x^3 + 3x - 5 = 0$ (1).

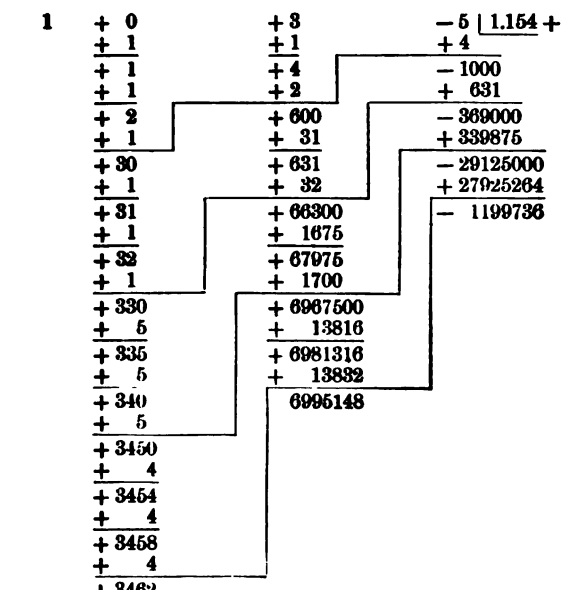

2. $x^3 - 6x - 12 = 0$ (3).

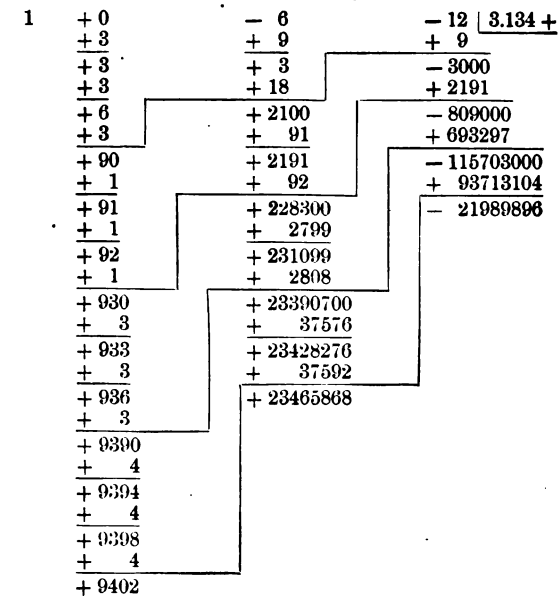
1
+0
+3
+3
+3
+6
+3
+90
+1
+91
+1
+92
+1
+930
+3
+933
+3
+936
+3
+9390
+4
+9394
+4
+9398
+4
+9402
−6
+9
+3
+18
+2100
+91
+2191
+92
+228300
+2799
+231099
+2808
+23390700
+37576
+23428276
+37592
+23465868
−12
3.134+
+9
−3000
+2191
−809000
+693297
−115703000
+93713104
−21989896

3. $x^3 + x^2 + x - 100 = 0$ (4).

1	+ 1	+ 1	− 100	4.264 +
	+ 4	+ 20	+ 84	
	+ 5	+ 21	− 16000	
	+ 4	+ 36	+ 11928	
	+ 9	+ 5700	− 4072000	
	+ 4	+ 264	+ 3788376	
	+ 130	+ 5964	− 283624000	
	+ 2	+ 268	+ 256071744	
	+ 132	+ 623200	− 27552256	
	+ 2	+ 8196		
	+ 134	+ 631396		
	+ 2	+ 8232		
	+ 1360	+ 63962800		
	+ 6	+ 55136		
	+ 1366	+ 64017936		
	+ 6	+ 55152		
	+ 1372	+ 64073088		
	+ 6			
	+ 13780			
	+ 4			
	+ 13784			
	+ 4			
	+ 13788			
	+ 4			
	+ 13792			

4. $x^3 + 10x^2 + 6x - 120 = 0$ (2).

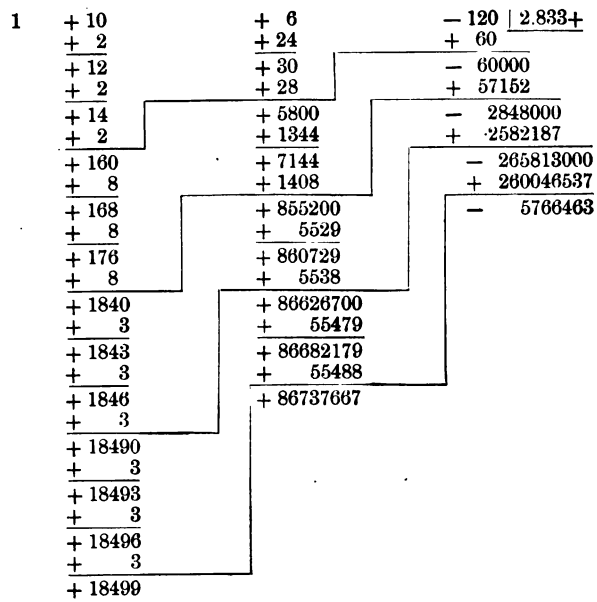

5. $x^3 + 9x^2 + 24x + 17 = 0 \qquad (-4).$

Change the sign of the roots.

The resulting equation is $x^3 - 9x^2 + 24x - 17 = 0.$

1	-9	$+24$	-17	$4.532+$
	$+4$	-20	$+16$	
	-5	$+4$	-1000	
	$+4$	-4	$+875$	
	-1	000	-125000	
	$+4$	$+175$	$+116577$	
	$+30$	$+175$	-8423000	
	$+5$	$+200$	$+8063768$	
	$+35$	$+37500$	-359232	
	$+5$	$+1359$		
	$+40$	$+38859$		
	$+5$	$+1368$		
	$+450$	$+4022700$		
	$+3$	$+9184$		
	$+453$	$+4031884$		
	$+3$	$+9188$		
	$+456$	$+4041072$		
	$+3$			
	$+4590$			
	$+2$			
	$+4592$			
	$+2$			
	$+4594$			
	$+2$			
	$+4596$			

Root is $-4.532+$

6. $x^4 - 12x^3 + 12x - 3 = 0$ $\quad (-1)$.

Change the sign of the roots.

The resulting equation is $x^4 + 12x^3 - 12x - 3 = 0$.

1	+ 12	+ 0	− 12	− 3 | 1.064+
	+ 1	+ 13	+ 13	+ 1
	+ 13	+ 13	+ 1	− 200000000
	+ 1	+ 14	+ 27	+ 183466896
	+ 14	+ 27	+ 28000000	− 165331040000
	+ 1	+ 15	+ 2577816	+ 133572525216
	+ 15	+ 420000	+ 30577816	− 31758514784
	+ 1	+ 9636	+ 2635848	
	+ 1600	+ 429636	+ 33213664000	
	+ 6	+ 9672	+ 179467304	
	+ 1606	+ 439308	+ 33393131304	
	+ 6	+ 9708	+ 179726272	
	+ 1612	+ 44801600	+ 33572857576	
	+ 6	+ 64976		
	+ 1618	+ 44866576		
	+ 6	+ 64992		
	+ 16240	+ 44931568		
	+ 4	+ 65008		
	+ 16244	+ 44996576		
	+ 4			
	+ 16248			
	+ 4			
	+ 16252			
	+ 4			
	+ 16256			

Root is − 1.064+

7. $x^4 - 8x^3 + 14x^2 + 4x - 8 = 0$ (-0).

Change the sign of the roots.

The resulting equation is

$$x^4 + 8x^3 + 14x^2 - 4x - 8 = 0.$$

1	+ 80	+ 1400	− 4000	− 80000 | 0.732 +
	+ 7	+ 609	+ 14063	+ 70441
	+ 87	+ 2009	+ 10063	− 95590000
	+ 7	+ 658	+ 18669	+ 89261841
	+ 94	+ 2667	+ 28732000	− 63281590000
	+ 7	+ 707	+ 1021947	+ 61710292976
	+ 101	+ 337400	+ 29753947	− 1571297024
	+ 7	+ 3249	+ 1031721	
	+ 1080	+ 340649	+ 30785668000	
	+ 3	+ 3258	+ 69478488	
	+ 1083	+ 343907	+ 30855146488	
	+ 3	+ 3267	+ 69522184	
	+ 1086	+ 34717400	+ 30924668672	
	+ 3	+ 21844		
	+ 1089	+ 34739244		
	+ 3	+ 21848		
	+ 10920	+ 34761092		
	+ 2	+ 21852		
	+ 10922	+ 34782944		
	+ 2			
	+ 10924			
	+ 2			
	+ 10926			
	+ 2			
	+ 10928			

Root is − 0 732 +

Exercise 143.

Calculate to six places of decimals the positive roots of the following equations:

1. $x^3 - 3x - 1 = 0$.

There is not more than one positive root.

The positive root lies between 1 and 2.

1	+0	−3	−1 ⌊1.879385+
	+1	+1	−2
	+1	−2	−3000
	+1	+2	+2432
	+2	000	−568000
	+1	+304	+497203
	+30	+304	−70797000
	+8	+368	+67871439
	+38	+67200	−2925561
	+8	+3829	+2278080
	+46	+71029	−647481
	+8	+3878	+607688
	+540	+7490700	−39793
	+7	+50571	+37985
	+547	+7541271	−1808
	+7	+50652	
	+554	+7591923	
	+7	+759192	
	+5610	+168	
	+9	+759360	
	+5619	+168	
	+9	+759528	
	+5628	+75953	
	+9	+8	
	+5637	+75961	
	+56	+8	
	+1	+75969	
		+7597	

2. $x^3 + 2x^2 - 4x - 43 = 0$.

There is only one positive root. It lies between 3 and 4.

1	+2	− 4	−43	3.263389+
	+3	+15	+33	
	+5	+11	−10000	
	+3	+24	+ 7448	
	+8	+3500	− 2552000	
	+3	+ 224	+ 2413176	
	+110	+3724	− 138824	
	+ 2	+ 228	+122877	
	+112	+395200	− 15947	
	+ 2	+ 6996	+12297	
	+114	+402196	− 3650	
	+ 2	+ 7032	+3280	
	+1160	+409228	− 370	
	+ 6	+40923	+369	
	+1166	+ 36	−1	
	+ 6	+40959		
	+1172	+ 36		
	+ 6	+40995.		
	+1178	+4099		
	+12	+410		
		+41		

3. $3x^3 + 3x^2 + 8x - 32 = 0$.

There is only one positive root. It lies between 1 and 2.

3	+ 3	+ 8	− 32	1.580947 +
	+ 3	+ 6	+ 14	
	+ 6	+ 14	− 18000	
	+ 3	+ 9	+ 14875	
	+ 9	+ 2300	− 3125000	
	+ 3	+ 675	+ 3087136	
	+ 120	+ 2975	− 37864	
	+ 15	+ 750	+ 35955	
	+ 135	+ 372500	− 1909	
	+ 15	+ 13392	+ 1596	
	+ 150	+ 385892	− 313	
	+ 15	+ 13584	+ 280	
	+ 1650	+ 399476	− 33	
	+ 24	+ 39948		
	+ 1674	+ 3995		
	+ 24	+ 390		
	+ 1698	+ 40		
	+ 24			
	+ 1722			
	+ 17			

4. $2x^3 - 26x^2 + 131x - 202 = 0$.

There is only one positive root. It lies between 2 and 3.

2	− 26	+ 131	− 202	2.656116 +
	+ 4	− 44	+ 174	
	− 22	+ 87	− 28000	
	+ 4	− 36	+ 25992	
	− 18	+ 5100	− 2008000	
	+ 4	− 768	+ 1792250	
	− 140	+ 4332	− 215750	
	+ 12	− 696	+ 211650	
	− 128	+ 363600	− 4100	
	+ 12	− 5150	+ 3521	
	− 116	+ 358450	− 579	
	+ 12	− 5100	+ 352	
	− 1040	+ 353350	− 227	
	+ 10	+ 35335	+ 210	
	− 1030	− 60	− 17	
	+ 10	+ 35275		
	− 1020	− 60		
	+ 10	+ 35215		
	− 1010	+ 3521		
	− 10	+ 352		
		+ 35		

5. $x^4 - 12x + 7 = 0$.

There are two positive roots, one between 0 and 1, and one between 2 and 3.

1	+ 00	+ 000	− 12000	+ 70000 | 0.593685+
	+ 5	+ 25	+ 125	− 59375
	+ 5	+ 25	− 11875	+ 106250000
	+ 5	+ 50	+ 375	− 102132639
	+ 10	+ 75	− 11500000	+ 4117361
	+ 5	+ 75	+ 151929	− 3351663
	+ 15	+ 15000	− 11348071	+ 765698
	+ 5	+ 1881	+ 169587	− 669882
	+ 200	+ 16881	− 11178484	− 95816
	+ 9	+ 1962	627	+ 89304
	+ 209	+ 18843	− 1117221	− 6512
	+ 9	+ 2043	627	+ 5580
	+ 218	+ 20886	− 1116594	− 932
	+ 9	+ 209	12	
	+ 227	+ 2	− 111647	
	+ 9		12	
	+ 236		− 111635	

1	+ 0	+ 0	− 12	+ 7 | 2.047275 +
	+ 2	+ 4	+ 8	− 8
	+ 2	+ 4	− 4	− 100000000
	+ 2	+ 8	+ 24	+ 83891456
	+ 4	+ 12	+ 20000000	− 16108544
	+ 2	+ 12	+ 972864	+ 15493758
	+ 6	+ 240000	+ 20972864	− 614786
	+ 2	+ 3216	+ 985792	+ 446296
	+ 800	+ 243216	+ 21958656	− 168490
	+ 4	+ 3232	+ 2195866	+ 156205
	+ 804	+ 246448	+ 17528	− 12285
	+ 4	+ 3248	+ 2213394	+ 11155
	+ 808	+ 249696	+ 17577	− 1130
	+ 4	+ 2497	+ 2230971	
	+ 812	+ 7	+ 223098	
	+ 1	+ 2504	+ 50	
		+ 7	+ 223148	
		+ 2511	+ 22315	
		+ 7	+ 2231	
		+ 2518		
		+ 25		

6. $x^4 - 5x^3 + 2x^2 - 13x + 55 = 0$.

There are two positive roots, one between 2 and 3, and one between 4 and 5.

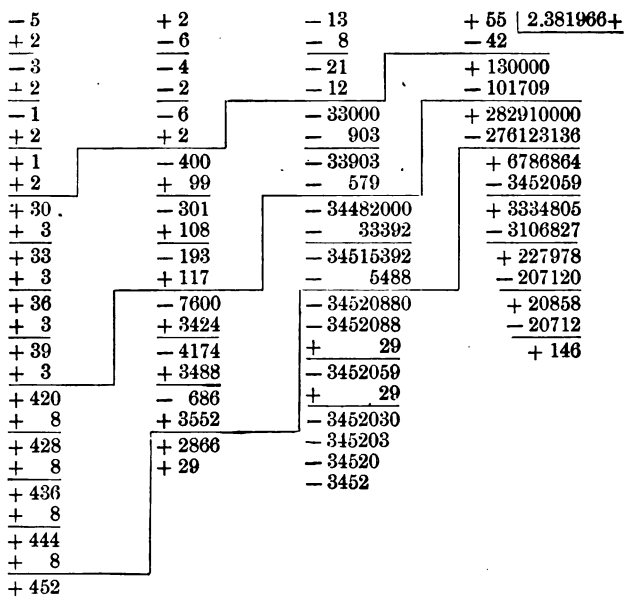

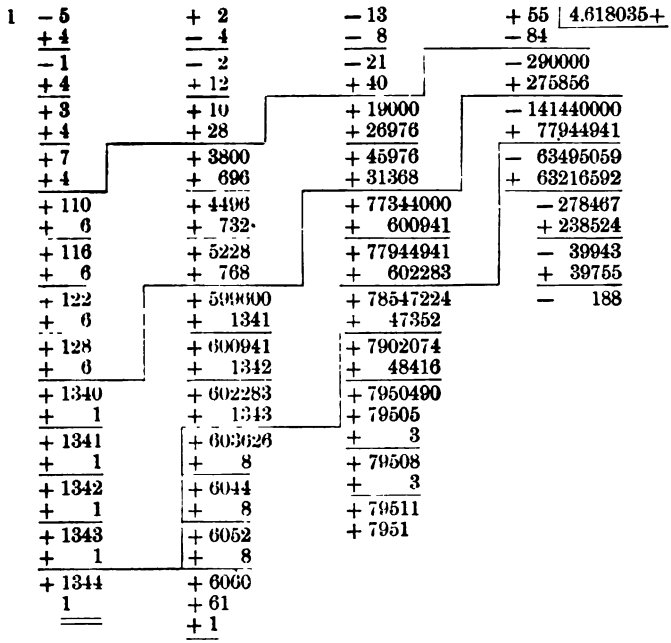
1
−5
+4
−1
+4
+3
+4
+7
+4
+110
+6
+116
+6
+122
+6
+128
+6
+1340
+1
+1341
+1
+1342
+1
+1343
1
+1344
+2
−4
−2
+12
+10
+28
+3800
+696
+4496
+732
+5228
+768
+599600
+1341
+600941
+1342
+602283
+1343
+603626
+8
+6044
+8
+6052
+8
+6060
+61
+1
−13
−8
−21
+40
+19000
+26976
+45976
+31368
+77344000
+600941
+77944941
+602283
+78547224
+47352
+7902074
+48416
+7950490
+79505
+3
+79508
+3
+79511
+7951
+55
−84
−290000
+275856
−141440000
+77944941
−63495059
+63216592
−278467
+238524
−39943
+39755
−188
4.618035+

7. $x^3 = 35{,}499$.

There is only one real root. It lies between 30 and 40.

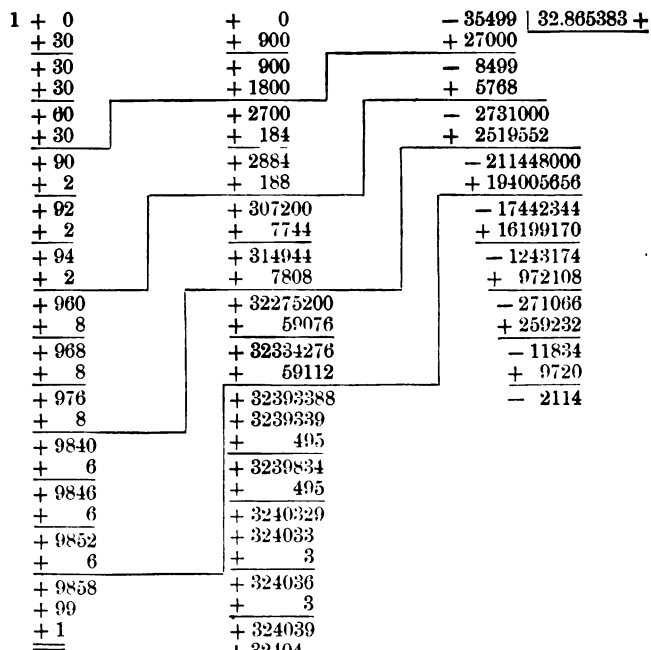

8. $x^3 = 242{,}970{,}624$.

There is only one real root. It lies between 600 and 700.

1	+ 0	+ 0	− 242970624	624
	+ 600	+ 360000	+ 216000000	
	+ 600	+ 360000	− 26970624	
	+ 600	+ 720000	+ 22328000	
	+ 1200	+ 1080000	− 4642624	
	+ 600	+ 36400	+ 4642624	
	+ 1800	+ 1116400	0	
	+ 20	+ 36800		
	+ 1820	+ 1153200		
	+ 20	+ 7456		
	+ 1840	+ 1160656		
	+ 20			
	+ 1860			
	+ 4			
	+ 1864			

9. $x^4 = 707{,}281$.

There is only one positive root. It lies between 20 and 30.

There is only one negative root. It lies between − 20 and − 30.

1	+ 0	+ 0	+ 0	− 707281	29
	+ 20	+ 400	+ 8000	+ 160000	
	+ 20	+ 400	+ 8000	− 547281	
	+ 20	+ 800	+ 24000	+ 547281	
	+ 40	+ 1200	+ 32000	0	
	+ 20	+ 1200	+ 28809		
	+ 60	+ 2400	+ 60809		
	+ 20	+ 801			
	+ 80	+ 3201			
	+ 9				
	+ 89				

± 29 are the only real roots

10. $x^5 = 147{,}008{,}443$.

There is only one real root. It lies between 40 and 50.

1	+ 0	+ 0	+ 0	+ 0	− 147008443 | 43
	+ 40	+ 1600	+ 64000	+ 2560000	+ 102400000
	+ 40	+ 1600	+ 64000	+ 2560000	− 44608443
	+ 40	+ 3200	+ 192000	+ 10240000	+ 44608443
	+ 80	+ 4800	+ 256000	+ 12800000	0
	+ 40	+ 4800	+ 384000	+ 2069481	
	+ 120	+ 9600	+ 640000	+ 14869481	
	+ 40	+ 6400	+ 49827		
	+ 160	+ 16000	+ 689827		
	+ 40	+ 609			
	+ 200	+ 16609			
	+ 3				
	+ 203				

11. $x^3 + 2x + 20 = 0$.

There is only one real root. It lies between -2 and -3.

1	+ 0	+ 2	− 20	2.469547+
	+ 2	+ 4	+ 12	
	+ 2	+ 6	− 8000	
	+ 2	+ 8	+ 6624	
	+ 4	+ 1400	− 1376000	
	+ 2	+ 256	+ 1182936	
	+ 60	+ 1656	− 193064	
	+ 4	+ 272	+ 181962	
	+ 64	+ 192800	− 11102	
	+ 4	+ 4356	+ 10140	
	+ 68	+ 197156	− 962	
	+ 4	+ 4392	+ 812	
	+ 720	+ 201548	− 150	
	+ 6	+ 20155	+ 140	
	+ 726	+ 63	− 10	
	+ 6	+ 20218		
	+ 732	+ 63		
	+ 6	+ 20281		
	+ 738	+ 2028	The real root is − 2.469547+	
	+ 7	+ 203		
		+ 20		

12. $x^3 - 10x^2 + 8x + 120 = 0$.

There is only one real root. It lies between -2 and -3.

1	+ 10	+ 8	− 120 | 2.768345+
	+ 2	+ 24	+ 64
	+ 12	+ 32	− 56000
	+ 2	+ 28	+ 50183
	+ 14	+ 6000	− 5817000
	+ 2	+ 1169	+ 5097576
	+ 160	+ 7169	− 719424
	+ 7	+ 1218	+ 689576
	+ 167	+ 838706	− 29848
	+ 7	+ 10896	+ 25902
	+ 174	+ 849596	− 3946
	+ 7	+ 10932	+ 3452
	+ 1810	+ 860528	− 494
	+ 6	+ 86053	+ 430
	+ 1816	+ 144	− 64
	+ 6	+ 86197	
	+ 1822	+ 144	
	+ 6	+ 86341	
	+ 1828	+ 8634	The real root is − 2.768345+
	+ 18	+ 863	
		+ 86	

Exercise 144.

Determine by Sturm's Theorem the number and situation of the real roots of the following equations:

1. $x^3 - 4x^2 - 11x + 43 = 0.$

$$f(x) = x^3 - 4x^2 - 11x + 43,$$
$$f'(x) = 3x^2 - 8x - 11.$$

$$\begin{array}{r|r|l}
3 - 8 - 11 & 1 - 4 - 11 + 43 & \\
6 - 16 - 22 & 3 - 12 - 33 + 129 & 1 - 4 \\
6 - 21 & 3 - 8 - 11 & \\
\hline
5 - 22 & - 4 - 22 + 129 & \\
10 - 44 & - 12 - 66 + 387 & \\
10 - 35 & - 12 + 32 + 44 & \\
\hline
- 9 & - 98 + 343 & \\
+ 9 & 2 - 7 & 3
\end{array}$$

$$\therefore f(x) = x^3 - 4x^2 - 11x + 43,$$
$$f'(x) = 3x^2 - 8x - 11,$$
$$f_2(x) = 2x - 7,$$
$$f_3(x) = 9.$$

	$f(x)$	$f'(x)$	$f_2(x)$	$f_3(x)$	
$x = -\infty$	$-$	$+$	$-$	$+$	3 variations.
$x = 0$	$+$	$-$	$-$	$+$	2 variations.
$x = +\infty$	$+$	$+$	$+$	$+$	0 variations.

$\therefore$ There is one negative root and two positive roots.

Again $\quad f(-4) = -41, \quad f(-3) = +13.$

$\therefore$ The negative root lies between -3 and -4.

$$f(3) = +1, \qquad f(4) = -1, \qquad f(5) = +13.$$

$\therefore$ One positive root lies between 3 and 4, the other between 4 and 5.

2. $x^3 - 6x^2 + 7x - 3 = 0.$

$$f(x) = x^3 - 6x^2 + 7x - 3,$$
$$f'(x) = 3x^2 - 12x + 7.$$

$$
\begin{array}{l|l|l}
3-12+7 & 1-6+7-3 & \\
6-24+14 & 3-18+21-9 & 1-2 \\
6-3 & 3-12+7 & \\
\hline
-21+14 & -6+14-9 & \\
-6+4 & -6+24-14 & \\
-6+3 & \hline & \\
\hline
+1 & -10+5 & \\
-1 & 2-1 & 3-3
\end{array}
$$

$$\therefore f(x) = x^3 - 6x^2 + 7x - 3,$$
$$f'(x) = 3x^2 - 12x + 7,$$
$$f_2(x) = 2x - 1,$$
$$f_3(x) = -1.$$

	$f(x)$	$f'(x)$	$f_2(x)$	$f_3(x)$	
$x = -\infty$	$-$	$+$	$-$	$-$	2 variations
$x = 0$	$-$	$+$	$-$	$-$	2 variations
$x = +\infty$	$+$	$+$	$+$	$-$	1 variation.

$\therefore$ There is one positive root and no negative roots.
Again $f(4) = -7, \quad f(5) = +7.$
$\therefore$ The only real root lies between 4 and 5.

3. $x^4 - 4x^3 + x^2 + 6x + 2 = 0.$

$$f(x) = x^4 - 4x^3 + x^2 + 6x + 2,$$
$$f'(x) = 4x^3 - 12x^2 + 2x + 6.$$

$$
\begin{array}{l|l|l}
4-12+2+6 & 1-4+1+6+2 & \\
2-6+1+3 & 2-8+2+12+4 & 1-1 \\
10-30+5+15 & 2-6+1+3 & \\
10-20-14 & \hline & \\
\hline
-10+19+15 & -2+1+9+4 & \\
-10+20+14 & -2+6-1-3 & \\
\hline
-1+1 & -5+10+7 & \\
1-1 & 5-10-7 & 2-2 \\
 & 5-5 & 5-5 \\
 & \hline & \\
 & -5-7 & \\
 & -5+5 & \\
 & \hline & \\
 & -12 & \\
 & +12 &
\end{array}
$$

$$\therefore f(x) = x^4 - 4x^3 + x^2 + 6x + 2,$$
$$f'(x) = 4x^3 - 12x^2 + 2x + 6,$$
$$f_2(x) = 5x^2 - 10x - 7,$$
$$f_3(x) = x - 1,$$
$$f_4(x) = +12.$$

	$f(x)$	$f'(x)$	$f_2(x)$	$f_3(x)$	$f_4(x)$	
$x = -\infty$	+	−	+	−	+	4 variations.
$x = 0$	+	+	−	−	+	2 variations.
$x = +\infty$	+	+	+	+	+	0 variations.

$\therefore$ There are two positive roots and two negative roots.

Again, $f(0) = 2$, $f(-\frac{1}{2}) = -\frac{3}{16}$, $f(-1) = 2$.

$\therefore$ One negative root lies between 0 and $-\frac{1}{2}$, and one between $-\frac{1}{2}$ and -1.

Also, $f(2) = 2$, $f(2\frac{1}{2}) = -0.1875$, $f(3) = 2$.

$\therefore$ One positive root lies between 2 and $2\frac{1}{2}$, and one between $2\frac{1}{2}$ and 3.

4. $x^4 - 5x^3 + 10x^2 - 6x - 21 = 0.$

$$f(x) = x^4 - 5x^3 + 10x^2 - 6x - 21,$$
$$f'(x) = 4x^3 - 15x^2 + 20x - 6.$$

4 − 15 + 20 − 6	1 − 5 + 10 − 6 − 21	
20 − 75 + 100 − 30	4 − 20 + 40 − 24 − 84	1 − 5
20 + 112 − 1464	4 − 15 + 20 − 6	
− 187 + 1564 − 30	− 5 + 20 − 18 − 84	
− 935 + 7820 − 150	− 20 + 80 − 72 − 336	
− 935 − 5236 + 68442	− 20 + 75 − 100 + 30	
13056 − 68592	5 + 28 − 366	
272 + 1429	− 5 − 28 + 366	− 4 + 187
	− 1360 − 7616 + 99552	+ 5
	− 1360 + 7145	
	− 14761 + 99552	
	+	
	−	

$$\therefore f(x) = x^4 - 5x^3 + 10x^2 - 6x - 21,$$
$$f(x) = 4x^3 - 15x^2 + 20x - 6,$$
$$f_2(x) = -5x^2 - 28x + 366,$$
$$f_3(x) = -272x + 1429,$$
$$f_4(x) = -.$$

	$f(x)$	$f'(x)$	$f_2(x)$	$f_3(x)$	$f_4(x)$	
$x = -\infty$	+	−	−	+	−	3 variations.
$x = 0$	−	−	+	+	−	2 variations.
$x = +\infty$	+	+	−	−	−	1 variation.

$\therefore$ There is one positive root, one negative root, and two imaginary roots.

Again, $f(0) = -21$, $f(-1) = +5$.

$\therefore$ The negative root lies between 0 and -1.

Also, $f(3) = -3$, $f(4) = +51$.

$\therefore$ The positive root lies between 3 and 4.

5. $x^4 - x^3 - x^2 + 6 = 0$.

$$f(x) = x^4 - x^3 - x^2 + 6,$$
$$f'(x) = 4x^3 - 3x^2 - 2x.$$

$4 - 3 - 2 + 0$	$1 - 1 - 1 + 0 + 6$	
$44 - 33 - 22 + 0$	$4 - 4 - 4 + 0 + 24$	$1 - 1$
$44 + 8 - 384$	$4 - 3 - 2 + 0$	
$-41 + 362 + 0$	$-1 - 2 + 0 + 24$	
$-451 + 3982 + 0$	$-4 - 8 + 0 + 96$	
$-451 - 82 + 3936$	$-4 + 3 + 2 + 0$	
$4064 - 3936$	$-11 - 2 + 96$	
$-127 + 123$	$11 + 2 - 96$	$4 - 41$
	$1397 + 254 - 12192$	-11
	$1397 - 1353$	
	$1607 - 12192$	
	−	
	+	

$$\therefore f(x) = x^4 - x^3 - x^2 + 6,$$
$$f'(x) = 4x^3 - 3x^2 - 2x,$$
$$f_2(x) = 11x^2 + 2x - 96,$$
$$f_3(x) = -127x + 123,$$
$$f_4(x) = +.$$

	$f(x)$	$f'(x)$	$f_2(x)$	$f_3(x)$	$f_4(x)$	
$x=-\infty$	+	−	+	+	+	2 variations.
$x=0$	+	−	−	+	+	2 variations.
$x=+\infty$	+	+	+	−	+	2 variations.

$\therefore$ There are four imaginary roots.

6. $x^4-2x^3-3x^2+10x-4=0.$

$$f(x)=x^4-2x^3-3x^2+10x-4,$$
$$f'(x)=4x^3-6x^2-6x+10.$$

$$\begin{array}{rr|l}
4-6-6+10 & 1-2-3+10-4 & \\
2-3-3+5 & 2-4-6+20-8 & 1-1 \\
18-27-27+45 & 2-3-3+5 & \\
18-54+22 & \hline & \\
\hline & -1-3+15-8 & \\
27-49+45 & -2-6+30-16 & \\
27-81+33 & -2+3+3-5 & \\
\hline & \hline & \\
32+12 & -9+27-11 & \\
-8-3 & 9-27+11 & 2+3 \\
 & 72-216+88 & -9+243 \\
 & 72+27 & \\
 & \hline & \\
 & -243+88 & \\
 & -1944+704 & \\
 & -1944-729 & \\
 & \hline & \\
 & +1433 & \\
 & -1433 &
\end{array}$$

$$\therefore f(x)=x^4-2x^3-3x^2+10x-4,$$
$$f'(x)=4x^3-6x^2-6x+10,$$
$$f_2(x)=9x^2-27x+11,$$
$$f_3(x)=-8x-3,$$
$$f_4(x)=-1433.$$

	$f(x)$	$f'(x)$	$f_2(x)$	$f_3(x)$	$f_4(x)$	
$x=-\infty$	+	−	+	+	−	3 variations.
$x=0$	−	+	+	−	−	2 variations.
$x=+\infty$	+	+	+	−	−	1 variation.

$\therefore$ There is one positive root, one negative root, and two imaginary roots.

Again, $f(-2) = -4, \quad f(-3) = +74.$

$\therefore$ The negative root lies between -2 and -3.

Also, $f(0) = -4, \quad f(1) = +2.$

$\therefore$ The positive root lies between 0 and 1.

7. $x^5 + 2x^4 + 3x^3 + 3x^2 - 1 = 0.$

$$f(x) = x^5 + 2x^4 + 3x^3 + 3x^2 - 1,$$
$$f'(x) = 5x^4 + 8x^3 + 9x^2 + 6x.$$

Both $f(x)$ and $f'(x)$ vanish when $x = -1$.

$x = -1$ is therefore a double root of $f(x) = 0$.

Divide $f(x)$ by $(x+1)^2$.

The depressed equation is

$$x^3 + 2x - 1 = 0.$$

Now let $f(x) = x^3 + 2x - 1.$

Then $f'(x) = 3x^2 + 2.$

$3 + 0 + 2$	$1 + 0 + 2 - 1$	
$12 + 0 + 8$	$3 + 0 + 6 - 3$	1
$12 - 9$	$3 + 0 + 2$	
$9 + 8$	$4 - 3$	$-3 - 9$
$36 + 32$	$-4 + 3$	
$36 - 27$		
$+59$		
-59		

$$\therefore f(x) = x^3 + 2x - 1,$$
$$f'(x) = 3x^2 + 2,$$
$$f_2(x) = -4x + 3,$$
$$f_3(x) = -59.$$

	$f(x)$	$f'(x)$	$f_2(x)$	$f_3(x)$	
$x = -\infty$	$-$	$+$	$+$	$-$	2 variations.
$x = 0$	$-$	$+$	$+$	$-$	2 variations.
$x = +\infty$	$+$	$+$	$-$	$-$	1 variation.

$\therefore$ There is one positive root and two imaginary roots.

Again, $f(0) = -1, \quad f(1) = +2.$

$\therefore$ The incommensurable real root lies between 0 and 1.

8. $x^5 + x^3 - 2x^2 + 3x - 2 = 0.$

$$f(x) = x^5 + x^3 - 2x^2 + 3x - 2,$$
$$f'(x) = 5x^4 + 3x^3 - 4x + 3.$$

$5+\ 0+\ 3-\ 4+\ 3$	$1+0+1-\ 2+\ 3-\ 2$	
$5-15+\ 30-\ 25$	$5+0+5-10+15-10$	1
	$5+0+3\ -\ 4+\ 3$	
$15-\ 27+\ 21+\ 3$	$2-\ 6+12-10$	
$15-\ 45+\ 90-\ 75$	$-1+\ 3-\ 6+\ 5$	$-5-15$
$18-\ 69+\ 78$	$-6+18-36+30$	$1+1$
$-\ 6+\ 23-\ 26$	$-6+23-26$	
$-210+805-\ 910$	$-\ 5-10+30$	
$-210+372$	$-\ 6-12+36$	
$433-\ 910$	$-\ 6+23-26$	
$15155-31850$	$-35+62$	
$15155-26896$	$35-62$	$-6+433$
$-$		
$+$		

$$f(x) = x^5 + x^3 - 2x^2 + 3x - 2,$$
$$f'(x) = 5x^4 + 3x^3 - 4x + 3,$$
$$f_2(x) = -x^3 + 3x^2 - 6x + 5,$$
$$f_3(x) = -6x^2 + 23x - 26,$$
$$f_4(x) = 35x - 62,$$
$$f_5(x) = +.$$

	$f(x)$	$f'(x)$	$f_2(x)$	$f_3(x)$	$f_4(x)$	$f_5(x)$	
$x = -\infty$	$-$	$+$	$+$	$-$	$-$	$+$	3 variations.
$x = 0$	$-$	$+$	$+$	$-$	$-$	$+$	3 variations.
$x = +\infty$	$+$	$+$	$-$	$-$	$+$	$+$	2 variations.

$\therefore$ There is one positive root and four imaginary roots.

Again, $f(0) = -2$, $f(1) = +1$.

$\therefore$ The real root lies between 0 and 1.

EXERCISE 145.

Prove the following relations by expanding:

1. $\begin{vmatrix} a_1 & a_2 \\ b_1 & b_2 \end{vmatrix} = \begin{vmatrix} a_1 & b_1 \\ a_2 & b_2 \end{vmatrix} = -\begin{vmatrix} a_2 & a_1 \\ b_2 & b_1 \end{vmatrix} = \begin{vmatrix} b_2 & b_1 \\ a_2 & a_1 \end{vmatrix}$.

$\begin{vmatrix} a_1 & a_2 \\ b_1 & b_2 \end{vmatrix} = a_1b_2 - a_2b_1$ $\quad$ $\begin{vmatrix} a_1 & b_1 \\ a_2 & b_2 \end{vmatrix} = a_1b_2 - a_2b_1$

$-\begin{vmatrix} a_2 & a_1 \\ b_2 & b_1 \end{vmatrix} = -(a_2b_1 - a_1b_2)$ $\quad$ $\begin{vmatrix} b_2 & b_1 \\ a_2 & a_1 \end{vmatrix} = b_2a_1 - a_2b_1$

$= a_1b_2 - a_2b_1$ $\quad$ $= a_1b_2 - a_2b_1$

2. $\begin{vmatrix} a_1 & a_2 & a_3 \\ b_1 & b_2 & b_3 \\ c_1 & c_2 & c_3 \end{vmatrix} = \begin{vmatrix} a_3 & a_2 & a_1 \\ c_3 & c_2 & c_1 \\ b_3 & b_2 & b_1 \end{vmatrix} = -\begin{vmatrix} b_1 & c_1 & a_1 \\ b_3 & c_3 & a_3 \\ b_2 & c_2 & a_2 \end{vmatrix}$.

$\begin{vmatrix} a_1 & a_2 & a_3 \\ b_1 & b_2 & b_3 \\ c_1 & c_2 & c_3 \end{vmatrix} = a_1b_2c_3 + a_2b_3c_1 + a_3b_1c_2 - a_1b_3c_2 - a_2b_1c_3 - a_3b_2c_1$

$\begin{vmatrix} a_3 & a_2 & a_1 \\ c_3 & c_2 & c_1 \\ b_3 & b_2 & b_1 \end{vmatrix} = a_3c_2b_1 + a_2b_3c_1 + a_1c_3b_2 - a_3c_1b_2 - a_2c_3b_1 - a_1c_2b_3$

$= a_1b_2c_3 + a_2b_3c_1 + a_3b_1c_2 - a_1b_3c_2 - a_2b_1c_3 - a_3b_2c_1$

$-\begin{vmatrix} b_1 & c_1 & a_1 \\ b_3 & c_3 & a_3 \\ b_2 & c_2 & a_2 \end{vmatrix} = -(b_1c_3a_2 + b_2c_1a_3 + c_3b_3a_1 - c_2b_1a_3 - a_2b_3c_1 - a_1b_2c_3)$

$= a_1b_2c_3 + a_2b_3c_1 + a_3b_1c_2 - a_1b_3c_2 - a_2b_1c_3 - a_3b_2c_1$

3. $\begin{vmatrix} 1 & 2 & 3 \\ 2 & 4 & 4 \\ 3 & 4 & 5 \end{vmatrix}$.

In the expansion of

$\begin{vmatrix} a_1 & a_2 & a_3 \\ b_1 & b_2 & b_3 \\ c_1 & c_2 & c_3 \end{vmatrix}$ **put** $a_1 = 1$, $a_2 = 2$, $a_3 = 3$, $b_1 = 2$, **etc.**

$\therefore \begin{vmatrix} 1 & 2 & 3 \\ 2 & 4 & 4 \\ 3 & 4 & 5 \end{vmatrix} = 1\times4\times5 + 2\times4\times3 + 3\times2\times4 - 1\times4\times4 - 2\times2\times5 - 3\times4\times3 = -4$

4. $\begin{vmatrix} 3 & 2 & 4 \\ 7 & 6 & 1 \\ 5 & 3 & 8 \end{vmatrix} = 3\times6\times8 + 2\times1\times5 + 4\times7\times3 - 3\times3\times1 - 2\times7\times8 - 4\times6\times5 = -3$

5. $\begin{vmatrix} 4 & 5 & 2 \\ -1 & 2 & -3 \\ 6 & -4 & 5 \end{vmatrix} = 4\times2\times5 - 5\times3\times6 + 2\times1\times4 - 4\times4\times3 + 5\times1\times5 - 2\times2\times6 = -89$

6. Count the inversions in the series:

5 4 1 3 2.	7 5 1 4 3 6 2.	*d a c e b.*
4 1 5 2 3.	6 5 4 2 1 3 7.	*c e b d a.*

5 4 1 3 2 has 8 inversions, 54, 51, 53, 52, 41, 43, 42, 32.
4 1 5 2 3 has 5 inversions, 41, 42, 43, 52, 53.
7 5 1 4 3 6 2 has 13 inversions, 75, 71, 74, 73, 76, 72, 51, 54, 53, 52, 43, 42, 62.
6 5 4 2 1 3 7 has 13 inversions, 65, 64, 62, 61, 53, 54, 52, 51, 53, 42, 41, 43, 21.
d a c e b has 5 inversions, *da, dc, db, cb, eb.*
c e b d a has 7 inversions, *cb, ca, eb, ed, ea, ba, da.*

7. In the determinant $|a_1b_2c_3d_4e_5|$ find the signs of the following terms.

$a_1b_4c_5d_3e_2$.	$a_5b_1c_3d_4e_2$.	$e_1c_4a_2b_5d_3$.
$a_2b_5c_3d_1e_4$.	$b_4c_5a_1e_3d_2$.	$c_1a_5b_3e_4d_2$.

$a_1b_4c_5d_3e_2$ has 5 subscript inversions, 43, 42, 53, 52, 32.
$\therefore$ Its sign is $-$.

$a_2b_5c_3d_1e_4$ has 5 subscript inversions, 21, 53, 51, 54, 31.
$\therefore$ Its sign is $-$.

$a_5b_1c_3d_4e_2$ has 6 subscript inversions, 51, 53, 54, 52, 32, 42.
$\therefore$ Its sign is $+$.

$$b_4c_5a_1e_3d_2 = a_1b_4c_5d_2e_3$$

$a_1b_4c_5d_2e_3$ has 4 subscript inversions, 42, 43, 52, 53.
$\therefore$ Its sign is $+$.

$$e_1c_4a_2b_5d_3 = a_2b_5c_4d_3e_1$$

$a_2b_5c_4d_3e_1$ has 7 subscript inversions, 21, 54, 53, 51, 43, 41, 31.
$\therefore$ Its sign is $-$.

$$c_1a_5b_3e_4d_2 = a_5b_3c_1d_2e_4$$

$a_5b_3c_1d_2e_4$ has 6 subscript inversions, 53, 51, 52, 54, 31, 32.
$\therefore$ Its sign is $+$

8. Write, with their proper signs, all the terms of the determinant $|a_1b_2c_3d_4|$.

$$\begin{aligned}
&a_1b_2c_3d_4 - a_1b_2c_4d_3 - a_1b_3c_2d_4 + a_1b_3c_4d_2 + a_1b_4c_2d_3 - a_1b_4c_3d_2 \\
&- a_2b_1c_3d_4 + a_2b_1c_4d_3 + a_2b_3c_1d_4 - a_2b_3c_4d_1 - a_2b_4c_1d_3 + a_2b_4c_3d_1 \\
&+ a_3b_1c_2d_4 - a_3b_1c_4d_2 - a_3b_2c_1d_4 + a_3b_2c_4d_1 + a_3b_4c_1d_2 - a_3b_4c_2d_1 \\
&- a_4b_1c_2d_3 + a_4b_1c_3d_2 + a_4b_2c_1d_3 - a_4b_2c_3d_1 - a_4b_3c_1d_2 + a_4b_3c_2d_1
\end{aligned}$$

9. Write, with their proper signs, all the terms of the determinant $|a_1b_2c_3d_4e_5|$ which contain both a_1 and b_4; all the terms which contain both b_3 and e_5.

(1) $a_1b_4(c_2d_3e_5 - c_2d_5e_3 - c_3d_2e_5 + c_3d_5e_2 + c_5d_2e_3 - c_5d_3e_2)$.

(2) $b_3e_5(-a_1c_2d_4 + a_1c_4d_2 + a_2c_1d_4 - a_2c_4d_1 - a_4c_1d_2 + a_4c_2d_1)$.

10. $\begin{vmatrix} a & b & 0 & 0 \\ b & a & 0 & 0 \\ 0 & a & a & b \\ 0 & b & b & a \end{vmatrix}$.

Since a_3, a_4, b_3, b_4, c_1, and d_1 are here all 0, the formula of Example 8 reduces to

$$\begin{aligned} a_1b_2c_3d_4 - a_1b_2c_4d_3 - a_2b_1c_3d_4 + a_2b_1c_4d_3 &= (a_1b_2 - a_2b_1)(c_3d_4 - c_4d_3) \\ &= (a^2 - b^2)(a^2 - b^2) \\ &= (a^2 - b^2)^2. \end{aligned}$$

11. $\begin{vmatrix} 0 & 0 & 0 & a \\ 0 & 0 & b & 0 \\ a & a & b & b \\ b & b & a & a \end{vmatrix}$.

The formula of Example 8 reduces to

$$-a_4b_3c_1d_2 + a_4b_3c_2d_1 = -a^2b^2 + a^2b^2 = 0.$$

12. $\begin{vmatrix} a & b & c & 0 \\ c & a & b & 0 \\ b & c & a & 0 \\ a & b & c & 1 \end{vmatrix}$.

The formula of Example 8 reduces to

$$\begin{aligned} a_1b_2c_3d_4 - a_1b_3c_2d_4 - a_2b_1c_3d_4 + a_2b_3c_1d_4 + a_3b_1c_2d_4 - a_3b_2c_1d_4 \\ = a^3 - abc - bca + b^3 + c^3 - cab \\ = a^3 + b^3 + c^3 - 3abc. \end{aligned}$$

EXERCISE 146.

Show that:

1. $\begin{vmatrix} 0 & a & b \\ a & 0 & c \\ b & c & 0 \end{vmatrix} = 2abc.$ $\qquad$ $\begin{vmatrix} 0 & a & b \\ a & 0 & c \\ b & c & 0 \end{vmatrix} = abc + abc = 2abc.$

2. $$\begin{vmatrix} a & b & a \\ b & a & a \\ b & a & b \end{vmatrix} = aab + bab + aba - aaa - bbb - aab$$
$$= a^2b + ab^2 + a^2b - a^3 - b^3 - a^2b$$
$$= -(a^3 + b^3 - a^2b - ab^2)$$
$$= -[(a+b)(a^2 - ab + b^2) - ab(a+b)]$$
$$= -(a+b)(a^2 - 2ab + b^2)$$
$$= -(a+b)(a-b)^2.$$

3. $$\begin{vmatrix} b+c & a & a \\ b & c+a & b \\ c & c & a+b \end{vmatrix} = 4abc.$$

$$\begin{vmatrix} b+c & a & a \\ b & c+a & b \\ c & c & a+b \end{vmatrix} = (b+c)(c+a)(a+b) + abc + abc - (b+c)bc - ab(a+b) - ac(c+a) = 4abc.$$

4. $$\begin{vmatrix} 1 & a & a^2 \\ 1 & b & b^2 \\ 1 & c & c^2 \end{vmatrix} = (a-b)(b-c)(c-a).$$

$$\begin{vmatrix} 1 & a & a^2 \\ 1 & b & b^2 \\ 1 & c & c^2 \end{vmatrix} = \begin{vmatrix} 0 & a-b & a^2-b^2 \\ 0 & b-c & b^2-c^2 \\ 1 & c & c^2 \end{vmatrix} = (a-b)(b-c)\begin{vmatrix} 0 & 1 & a+b \\ 0 & 1 & b+c \\ 1 & c & c^2 \end{vmatrix}$$
$$= (a-b)(b-c)\begin{vmatrix} 0 & 0 & a-c \\ 0 & 1 & b+c \\ 1 & c & c^2 \end{vmatrix} = (a-b)(b-c)(c-a).$$

Process: Subtract the second row from the first, and the third row from the second. Take out the factors $a-b$ and $b-c$ from the first and second rows. Subtract the second row from the first, and expand the resulting determinant.

5. $$\begin{vmatrix} 3 & 5 & 7 \\ 2 & 1 & 3 \\ 4 & 3 & 7 \end{vmatrix} = \begin{vmatrix} 3 & 5 & -1 \\ 2 & 1 & 0 \\ 4 & 3 & 0 \end{vmatrix} = -1 \times 2 \times 3 + 1 \times 4 \times 1$$
$$= -6 + 4 = -2.$$

Process: Subtract the sum of the first and second columns from the third. Expand the resulting determinant.

6. $$\begin{vmatrix} 2 & 13 & 20 \\ 3 & 9 & 18 \\ 5 & 10 & 23 \end{vmatrix} = 3\begin{vmatrix} 2 & 13 & 20 \\ 1 & 3 & 6 \\ 5 & 10 & 23 \end{vmatrix} = 3\begin{vmatrix} 0 & 7 & 8 \\ 1 & 3 & 6 \\ 0 & -5 & -7 \end{vmatrix}$$
$$= 3(1 \times 7 \times 7 - 1 \times 5 \times 8) = 3(49 - 40) = 27.$$

Process: Take out 3 as a factor from the second row. Subtract twice the second row from the first. Subtract 5 times the second row from the third. Expand the resulting determinant.

$$7.\quad \begin{vmatrix} 19 & 13 & 16 \\ 25 & 16 & 28 \\ 28 & 10 & 19 \end{vmatrix} = \begin{vmatrix} 6 & 13 & 3 \\ 9 & 16 & 12 \\ 18 & 10 & 9 \end{vmatrix} = 9 \begin{vmatrix} 2 & 13 & 1 \\ 3 & 16 & 4 \\ 6 & 10 & 3 \end{vmatrix} = 9 \begin{vmatrix} 0 & 0 & 1 \\ -1 & -36 & 4 \\ 3 & -24 & 3 \end{vmatrix}$$

$$= 9(1\times 1\times 29 + 1\times 3\times 36) = 9(29+108) = 1233.$$

Process: Subtract the second column from the first and from the third. Take out 3 as a factor from the first column and the third. Subtract 2 times the third column from the first, and 13 times the third column from the second. Expand the resulting determinant.

$$8.\quad \textbf{Show that } \begin{vmatrix} a & a^2 & bc \\ b & b^2 & ac \\ c & c^2 & ab \end{vmatrix} = -(a-b)(b-c)(c-a)(ab+bc+ca).$$

$$\begin{vmatrix} a & a^2 & bc \\ b & b^2 & ac \\ c & c^2 & ab \end{vmatrix} - \begin{vmatrix} a-b & a^2-b^2 & bc-ac \\ b-c & b^2-c^2 & ac-ab \\ c & c^2 & ab \end{vmatrix}$$

$$= (a-b)(b-c) \begin{vmatrix} 1 & a+b & -c \\ 1 & b+c & -a \\ c & c^2 & ab \end{vmatrix}$$

$$= (a-b)(b-c) \begin{vmatrix} 0 & a-c & a-c \\ 1 & b+c & -a \\ c & c^2 & ab \end{vmatrix}$$

$$= (a-b)(b-c)(a-c) \begin{vmatrix} 0 & 1 & 1 \\ 1 & b+c & -a \\ c & c^2 & ab \end{vmatrix}.$$

$$= (a-b)(b-c)(a-c) \begin{vmatrix} 0 & 1 & 1 \\ 1 & b+c & -a \\ 0 & -bc & ab+ac \end{vmatrix}$$

$$= (a-b)(b-c)(a-c)[-(ab+ac)-bc]$$

$$= (a-b)(b-c)(c-a)(ab+bc+ca).$$

Process: Subtract the second row from the first, and the third row from the second. Take out the factor $a-b$ from the first row, and the factor $b-c$ from the second row. Subtract the second row from the first. Take out the factor $a-c$ from the first row. Subtract c times the second row from the third. Expand the resulting determinant.

9. $\begin{vmatrix} a+2b & a+4b & a+6b \\ a+3b & a+5b & a+7b \\ a+4b & a+6b & a+8b \end{vmatrix} = \begin{vmatrix} a+2b & a+4b & a+6b \\ b & b & b \\ b & b & b \end{vmatrix} = 0,$

since two rows are identical.

Process: Subtract the first row from the second, and the second from the third.

10. $\begin{vmatrix} (a+b)^2 & c^2 & c^2 \\ a^2 & (b+c)^2 & a^2 \\ b^2 & b^2 & (c+a)^2 \end{vmatrix}$

$= \begin{vmatrix} (a+b)^2-c^2 & 0 & c^2 \\ 0 & (b+c)^2-a^2 & a^2 \\ b^2-(c+a)^2 & b^2-(c+a)^2 & (c+a)^2 \end{vmatrix}$

$= (a+b+c)^2 \begin{vmatrix} a+b-c & 0 & c^2 \\ 0 & b+c-a & a^2 \\ b-c-a & b-c-a & (c+a)^2 \end{vmatrix}$

$= (a+b+c)^2 \begin{vmatrix} a+b-c & 0 & c^2 \\ 0 & b+c-a & a^2 \\ -2a & -2c & 2ac \end{vmatrix}$

$= (a+b+c)^2\{(a+b-c)[(b+c-a)2ac+2a^2c]+2ac^2(b+c-a)\}$

$= 2abc\,(a+b+c)^3.$

Process: Subtract the third column from the first and second. Remove the factor $a+b+c$ from the first and second columns. Subtract the sum of the first and second rows from the third row.

EXERCISE 147.

1. In the determinant $|a_1 b_2 c_3 d_4|$ write the co-factors of a_3, b_2, b_4, c_1, c_4, d_2, d_3.

Write out the determinant $\begin{vmatrix} a_1 & a_2 & a_3 & a_4 \\ b_1 & b_2 & b_3 & b_4 \\ c_1 & c_2 & c_3 & c_4 \\ d_1 & d_2 & d_3 & d_4 \end{vmatrix}$.

Then $A_3 = \begin{vmatrix} b_1 & b_2 & b_4 \\ c_1 & c_2 & c_4 \\ d_1 & d_2 & d_4 \end{vmatrix}$, $B_2 = \begin{vmatrix} a_1 & a_3 & a_4 \\ c_1 & c_3 & c_4 \\ d_1 & d_3 & d_4 \end{vmatrix}$, $B_4 = \begin{vmatrix} a_1 & a_2 & a_3 \\ c_1 & c_2 & c_3 \\ d_1 & d_2 & d_3 \end{vmatrix}$,

$C_1 = \begin{vmatrix} a_2 & a_3 & a_4 \\ b_2 & b_3 & b_4 \\ d_2 & d_3 & d_4 \end{vmatrix}$, $C_4 = -\begin{vmatrix} a_1 & a_2 & a_3 \\ b_1 & b_2 & b_3 \\ d_1 & d_2 & d_3 \end{vmatrix}$, $D_2 = \begin{vmatrix} a_1 & a_3 & a_4 \\ b_1 & b_3 & b_4 \\ c_1 & c_3 & c_4 \end{vmatrix}$,

$D_3 = -\begin{vmatrix} a_1 & a_2 & a_4 \\ b_1 & b_2 & b_4 \\ c_1 & c_2 & c_4 \end{vmatrix}$.

2. Express as a single determinant

$$\begin{vmatrix} e & f & g \\ f & h & k \\ g & k & l \end{vmatrix} + \begin{vmatrix} b & e & g \\ c & f & k \\ d & g & l \end{vmatrix} + \begin{vmatrix} b & g & f \\ c & k & h \\ d & l & k \end{vmatrix} + \begin{vmatrix} b & f & e \\ c & h & f \\ d & k & g \end{vmatrix}.$$

The sum may be written:

$$\begin{vmatrix} e & f & g \\ f & h & k \\ g & k & l \end{vmatrix} + \begin{vmatrix} b & e & g \\ c & f & k \\ d & g & l \end{vmatrix} - \begin{vmatrix} b & f & g \\ c & h & k \\ d & k & l \end{vmatrix} - \begin{vmatrix} b & e & f \\ c & f & h \\ d & g & k \end{vmatrix}$$

$$= \begin{vmatrix} e & f & g \\ f & h & k \\ g & k & l \end{vmatrix} - \begin{vmatrix} b & f & g \\ c & h & k \\ d & k & l \end{vmatrix} + \begin{vmatrix} b & e & g \\ c & f & k \\ d & g & l \end{vmatrix} - \begin{vmatrix} b & e & f \\ c & f & h \\ d & g & k \end{vmatrix}.$$

These four determinants are evidently the co-factors of the first row of the determinant:

$$\begin{vmatrix} 1 & 1 & 1 & 1 \\ b & e & f & g \\ c & f & h & k \\ d & g & k & l \end{vmatrix},$$ **which is therefore the required sum.**

Expand:

3. $\begin{vmatrix} a & b & b & a \\ b & a & a & b \\ a & a & b & b \\ 0 & a & b & b \end{vmatrix}.$

Subtract the fourth row from the third.

The result is $\begin{vmatrix} a & b & b & a \\ b & a & a & b \\ a & 0 & 0 & 0 \\ 0 & a & b & b \end{vmatrix} = a \begin{vmatrix} b & b & a \\ a & a & b \\ a & b & b \end{vmatrix}.$

Subtract the second row from the first, and the third from the second.

The result is $a \begin{vmatrix} b-a & b-a & a-b \\ 0 & a-b & 0 \\ a & b & b \end{vmatrix} = a(a-b)^2 \begin{vmatrix} -1 & -1 & 1 \\ 0 & 1 & 0 \\ a & b & b \end{vmatrix}$

$$= a(a-b)^2 \begin{vmatrix} -1 & 1 \\ a & b \end{vmatrix} = -a(a-b)^2(a+b).$$

4. $\begin{vmatrix} 0 & d & d & d \\ a & 0 & a & a \\ b & b & 0 & b \\ c & c & c & 0 \end{vmatrix}.$

Multiply the first column by 2, and subtract from it the sum of the other three columns.

The result is $\frac{1}{2}\begin{vmatrix} -3d & d & d & d \\ 0 & 0 & a & a \\ 0 & b & 0 & b \\ 0 & c & c & 0 \end{vmatrix} = \frac{1}{2}abcd \begin{vmatrix} -3 & 1 & 1 & 1 \\ 0 & 0 & 1 & 1 \\ 0 & 1 & 0 & 1 \\ 0 & 1 & 1 & 0 \end{vmatrix}$

$$= -\tfrac{1}{2}abcd \begin{vmatrix} 0 & 1 & 1 \\ 1 & 0 & 1 \\ 1 & 1 & 0 \end{vmatrix} = \tfrac{1}{2}abcd \begin{vmatrix} 1 & 1 \\ 1 & 0 \end{vmatrix} - \tfrac{1}{2}abcd \begin{vmatrix} 1 & 1 \\ 0 & 1 \end{vmatrix}$$

$$= -3abcd$$

5. $\begin{vmatrix} 1 & a & a & a \\ 1 & b & a & a \\ 1 & a & b & a \\ 1 & a & a & b \end{vmatrix}$.

Subtract the second row from the first.

The result is $\begin{vmatrix} 0 & a-b & 0 & 0 \\ 1 & b & a & a \\ 1 & a & b & a \\ 1 & a & a & b \end{vmatrix} = -(a-b)\begin{vmatrix} 1 & a & a \\ 1 & b & a \\ 1 & a & b \end{vmatrix}$

Again, subtract the second row from the first.

The result is $-(a-b)\begin{vmatrix} 0 & a-b & 0 \\ 1 & b & a \\ 1 & a & b \end{vmatrix} = (a-b)^2 \begin{vmatrix} 1 & a \\ 1 & b \end{vmatrix}$

$$= -(a-b)^3 = (b-a)^3$$

6. $\begin{vmatrix} 3 & 2 & 2 & 2 \\ 2 & 3 & 2 & 2 \\ 2 & 2 & 3 & 2 \\ 2 & 2 & 2 & 3 \end{vmatrix}$.

Subtract the fourth row from each of the others.

The result is $\begin{vmatrix} 1 & 0 & 0 & -1 \\ 0 & 1 & 0 & -1 \\ 0 & 0 & 1 & -1 \\ 2 & 2 & 2 & 3 \end{vmatrix}$

Add the sum of the first three columns to the fourth.

The result is $\begin{vmatrix} 1 & 0 & 0 & 0 \\ 0 & 1 & 0 & 0 \\ 0 & 0 & 1 & 0 \\ 2 & 2 & 1 & 9 \end{vmatrix} = 9$

7. $\begin{vmatrix} 3 & 2 & 1 & 4 \\ 15 & 29 & 2 & 14 \\ 16 & 19 & 3 & 17 \\ 33 & 39 & 8 & 38 \end{vmatrix}$.

Subtract twice the first row from the second, 3 times the first row from the third, and 8 times the first row from the fourth.

The result is $\begin{vmatrix} 3 & 2 & 1 & 4 \\ 9 & 25 & 0 & 6 \\ 7 & 15 & 0 & 5 \\ 9 & 23 & 0 & 6 \end{vmatrix} = \begin{vmatrix} 9 & 25 & 6 \\ 7 & 13 & 5 \\ 9 & 23 & 6 \end{vmatrix}$

Subtract the third row from the first.

The result is $\begin{vmatrix} 0 & 2 & 0 \\ 7 & 13 & 5 \\ 9 & 23 & 6 \end{vmatrix} = -2 \begin{vmatrix} 7 & 5 \\ 9 & 6 \end{vmatrix} = 6$

8. $\begin{vmatrix} 2 & 1 & 3 & 4 \\ 7 & 4 & 5 & 9 \\ 3 & 3 & 6 & 2 \\ 1 & 7 & 7 & 5 \end{vmatrix}$.

Subtract twice the second column from the first, 3 times the second column from the third, and 4 times the second column from the fourth.

The result is $\begin{vmatrix} 0 & 1 & 0 & 0 \\ -1 & 4 & -7 & -7 \\ -3 & 3 & -3 & -10 \\ -13 & 7 & -14 & -23 \end{vmatrix} = \begin{vmatrix} 1 & 7 & 7 \\ 3 & 3 & 10 \\ 13 & 14 & 23 \end{vmatrix}$

Subtract 7 times the first column from the second and third.

The result is $\begin{vmatrix} 1 & 0 & 0 \\ 3 & -18 & -11 \\ 13 & -77 & -68 \end{vmatrix} = \begin{vmatrix} 18 & 11 \\ 77 & 68 \end{vmatrix} = \begin{vmatrix} 7 & 11 \\ 9 & 68 \end{vmatrix} = 377$

9. $\left.\begin{array}{l} 3x - 4y + 2z = 1 \\ 2x + 3y - 3z = -1 \\ 5x - 5y + 4z = 7 \end{array}\right\}$.

The solutions are:

$$x = \frac{\begin{vmatrix} 1 & -4 & 2 \\ -1 & 3 & -3 \\ 7 & -5 & 4 \end{vmatrix}}{\begin{vmatrix} 3 & -4 & 2 \\ 2 & 3 & -3 \\ 5 & -5 & 4 \end{vmatrix}} \quad y = \frac{\begin{vmatrix} 3 & 1 & 2 \\ 2 & -1 & -3 \\ 5 & 7 & 4 \end{vmatrix}}{\begin{vmatrix} 3 & -4 & 2 \\ 2 & 3 & -3 \\ 5 & -5 & 4 \end{vmatrix}} \quad z = \frac{\begin{vmatrix} 3 & -4 & 1 \\ 2 & 3 & -1 \\ 5 & -5 & 7 \end{vmatrix}}{\begin{vmatrix} 3 & -4 & 2 \\ 2 & 3 & -3 \\ 5 & -5 & 4 \end{vmatrix}}$$

But $\begin{vmatrix} 1 & -4 & 2 \\ -1 & 3 & -3 \\ 7 & -5 & 4 \end{vmatrix} = \begin{vmatrix} 1 & 0 & 0 \\ -1 & -1 & -1 \\ 7 & 23 & -10 \end{vmatrix} = 33$

$$\begin{vmatrix} 3 & 1 & 2 \\ 2 & -1 & -3 \\ 5 & 7 & 4 \end{vmatrix} = \begin{vmatrix} 0 & 1 & 0 \\ 5 & -1 & -1 \\ -16 & 7 & -10 \end{vmatrix} = 66$$

$$\begin{vmatrix} 3 & -4 & 1 \\ 2 & 3 & -1 \\ 5 & -5 & 7 \end{vmatrix} = \begin{vmatrix} 0 & 0 & 1 \\ 5 & -1 & -1 \\ -16 & 23 & 7 \end{vmatrix} = 99$$

$$\begin{vmatrix} 3 & -4 & 2 \\ 2 & 3 & -3 \\ 5 & -5 & 4 \end{vmatrix} = \begin{vmatrix} 1 & 0 & 2 \\ 5 & -3 & -3 \\ 1 & 3 & 4 \end{vmatrix} = \begin{vmatrix} 1 & 0 & 0 \\ 5 & -3 & -13 \\ 1 & 3 & 2 \end{vmatrix} = 33$$

$$\therefore x = \tfrac{33}{33} = 1, \quad y = \tfrac{66}{33} = 2, \quad z = \tfrac{99}{33} = 3.$$

10. $\left.\begin{array}{l} 4x - 7y + z = 16 \\ 3x + y - 2z = 10 \\ 5x - 6y - 3z = 10 \end{array}\right\}$.

The solutions are:

$$x = \frac{\begin{vmatrix} 16 & -7 & 1 \\ 10 & 1 & -2 \\ 10 & -6 & -3 \end{vmatrix}}{\begin{vmatrix} 4 & -7 & 1 \\ 3 & 1 & -2 \\ 5 & -6 & -3 \end{vmatrix}} \quad y = \frac{\begin{vmatrix} 4 & 16 & 1 \\ 3 & 10 & -2 \\ 5 & 10 & -3 \end{vmatrix}}{\begin{vmatrix} 4 & -7 & 1 \\ 3 & 1 & -2 \\ 5 & -6 & -3 \end{vmatrix}} \quad z = \frac{\begin{vmatrix} 4 & -7 & 16 \\ 3 & 1 & 10 \\ 5 & -6 & 10 \end{vmatrix}}{\begin{vmatrix} 4 & -7 & 1 \\ 3 & 1 & -2 \\ 5 & -6 & -3 \end{vmatrix}}$$

But $\begin{vmatrix} 16 & -7 & 1 \\ 10 & 1 & -2 \\ 10 & -6 & -3 \end{vmatrix} = \begin{vmatrix} 0 & 0 & 1 \\ 42 & -13 & -2 \\ 58 & -27 & -3 \end{vmatrix} = -380$

$\begin{vmatrix} 4 & 16 & 1 \\ 3 & 10 & -2 \\ 5 & 10 & -3 \end{vmatrix} = \begin{vmatrix} 0 & 0 & 1 \\ 11 & 42 & -2 \\ 17 & 58 & -3 \end{vmatrix} = -76$

$\begin{vmatrix} 4 & -7 & 16 \\ 3 & 1 & 10 \\ 5 & -6 & 10 \end{vmatrix} = \begin{vmatrix} 25 & 0 & 86 \\ 3 & 1 & 10 \\ 23 & 0 & 70 \end{vmatrix} = -228$

$\begin{vmatrix} 4 & -7 & 1 \\ 3 & 1 & -2 \\ 5 & -6 & -3 \end{vmatrix} = \begin{vmatrix} 0 & 0 & 1 \\ 11 & -13 & -2 \\ 17 & -27 & -3 \end{vmatrix} = -76$

$$\therefore x = \frac{-380}{-76} = 5, \quad y = \frac{-76}{-76} = 1, \quad z = \frac{-228}{-76} = 3.$$

THE BEGINNER'S GREEK BOOK.

By JOHN WILLIAMS WHITE, Ph.D. (Harv.),

Professor of Greek in Harvard University, Author of First Lessons in Greek, etc.

READY THIS SUMMER.

Many teachers have expressed their desire for a book for the first year's study of Greek, complete in itself, and simpler in its presentation of the elementary facts of the language than the author's *First Lessons in Greek*. THE BEGINNER'S GREEK BOOK will be complete in itself, presenting forms and elementary syntax directly, and not by reference to grammars.

It will consist of carefully graded lessons, selections for reading, and complete vocabularies.

The lessons will present the facts of grammar simply and briefly, and will furnish, with the necessary special vocabularies, exercises for practice, both in reading and in writing Greek.

The selections for reading will be varied and attractive, and sufficient in amount to meet all the demands of the first year's study. The reading of connected extracts will be introduced early.

The aim controlling the plan of the book is the gradual acquisition by the student of an accurate knowledge of the elements of the language, *mainly by practice.*

The fact that this new book is by the author of *White's First Lessons in Greek*, the most highly esteemed and most widely used book of its class, will be deemed by all strong *prima facie* evidence of its excellence and practical availability.

GINN & COMPANY, Publishers,
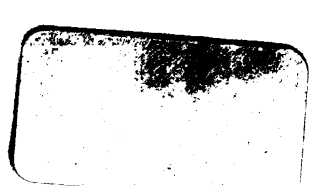
BOSTON, NEW YORK, AND CHICAGO.